UNITED ELECTRIC CONTROLS

ONE Series Safety Transmitter

Explosion-proof pressure and temperature smart transmitter + switch

DUAL SEAL CERTIFIED

United Electric Controls is ISO 9001:2015 certified

RoHS compliant

ONEST - B 04

Table of Contents

Specifications ..... page 3-5
Models ..... page 5-6
Options ..... page 7-8
Dimensional drawings ..... page 9-10
Certifications ..... page 11

Use the following pages to determine the best device for your application then build your part number.

Building a Part Number

EXAMPLE: 2SLP47 - P15 - M041

Type: Select type from table below:

Type	Description	Zone 1	Zone 2	Division 1	Division 2
2SLP47	2-wire loop-powered or 24 VDC fixed current power supply, 4-20 mA analog output, programmable solidstate relay rated at 12-250 VAC @ 5 mA-5 amperes, 2 status switch outputs each rated at 30 VDC @ 20 mA maximum	●	●	●	●
2SLP48	2-wire loop-powered or 24 VDC fixed current power supply, 4-20 mA analog output, programmable solidstate relay rated at 30 VDC @ 6 amperes (1.8 A pilot duty rating), 2 status switch outputs each rated at 30 VDC @ 20 mA maximum	●	●	●	●
2SLP49	2-wire loop-powered or 24 VDC fixed current power supply, 4-20 mA analog output, programmable solidstate relay rated at 130 VDC @ 2.5 amperes (Q150 pilot duty rating), 2 status switch outputs each rated at 30 VDC @ 20 mA maximum	●	●	●	●

Model: Select the range and measurement parameter for your application

PRESSURE ..... page 5
DIFFERENTIAL PRESSURE ..... page 6
TEMPERATURE ..... page 6

Options: Select any of available options for your device

OPTION LIST ..... page 7-8

GLOSSARY OF TERMS:

Set Point	The value at which the switch is set to actuate. Switches may be set to actuate on rising or falling pressure or temperature.
Deadband	The difference in pressure or temperature between which the switch is set to actuate and de-actuate. Deadband is fully programmable within the Adjustable Set Point Range.
Adjustable Set Point Range	The pressure or temperature range within which the set point can be adjusted.
Over Range Pressure	The maximum pressure that may be applied continuously Exceeding the Over Range Pressure will cause a fault to occur.
Proof Pressure	The maximum pressure that may be occasionally applied without causing damage. May cause changes to the sensor output requiring Offset and Span adjustments.
Differential Proof Pressure	The maximum pressure difference that may be applied between the high and low ports without causing damage. May cause changes to the sensor output requiring Offset and Span adjustments.
Working Pressure	The maximum pressure that may be applied simultaneously to the high and low ports. Note: In addition to the Working Pressure limit, the Adjustable Set point Range must be maintained.

Specifications

Power input/ Switch output:			
	Voltage and Current Maximum Ratings		
Signal Name	2SLP47	2SLP48	2SLP49
Power Supply	2-wire 20-40 VDC @ 4-20 mA (Loop or Fixed Current)		
Safety Relay Output	12-250 VAC @ 5 mA-5 A	0-30 VDC @ 6 A, 1.8 A Pilot Duty	0-130 VDC @ 2.5 A, Q150[1] Pilot Duty
With Relay Monitor Enabled	12-250 VAC @ 5 mA-5 A	10-30 VDC @ 5 mA-6 A	10-130 VDC @ 5 mA-2.5 A
Temperature Derating	1% per ˚C above 25 ˚C		
SRO Status	30 VDC @ 20 mA		
IAW Output	30 VDC @ 20 mA		

[1] Q150 Pilot Duty: 2.5 A (Continuous Current), 0.55 A (Make or Break), 69 VA

Accuracy	0.5% of full range span, at room temperature
Repeatability	0.1% of full range span

	Approved Ambient Operating Temperature Range	
Model	cULus (Division System)	cULus & ATEX (Zone System)
2SLP	-40 °F to 158 °F (-40 °C TO 70 °C)	-40 °F to 158 °F (-40 °C to 70 °C)

Display visibility temperature range	10 °F (-12 °C) to 158 °F (70 °C) all models

Long-term Stability	±0.25% of range/year maximum
Temperature Drift	0.03% of full scale per °C (0.06% for the K10 range)
Display response time	400 mS (updated 2.5 times per second)
Filter (transient filtering to prevent nuisance trips)	Programmable time constants for 0.25*, 0.5*, 1, and 2 seconds, default OFF for pressure models and 0.5 seconds for temperature models.
Set 4 MA (scale the 4 mA output)	Programmable from -3 to 15% of the sensor's range. Values are in the units of measure selected and are range dependent
Set 20 MA (scale the 20 mA output) **	Programmable from 25 to 103% of the sensor's range. Values are in the units of measure selected and are range dependent
IAW® (I Am Working) Diagnostics	Open or shorted sensor; plugged port; power supply out of range; over and underrange conditions; microprocessor faults/failure; keypad short; switch fault

* Pressure models only
** For scaling low ranges P10-P11, consult UE.

Control modes	Field-configuration for SRO switch action with programmable manual reset

Model	Action	Fault
Open Rise	Open on rising media	Open
Open Fall	Open on falling media	Open
Window	Open outside window	Open

Analog output	4-20 mA NAMUR NE 43 compliant, 360 ohms max. at 24 VDC, Field scalable, 4:1 turn down. Faults are indicated at ≤3.6 mA. See installation manual for details.
Analog output response time	250 mS maximum with FILTER set to OFF, pressure models only
Safety Relay Output Set point & deadband	User-configured, 100% adjustable over entire sensor operating range, deadband of 0 is undefined
Status Outputs	**SRO Status** - 30 VDC @ 20 mA Maximum **IAW Output** - 30 VDC @ 20 mA Maximum
Switch response time	"Change-of-output" response ≤ 100 mS (for detection of full step change and change of output state, Filter feature off)

Specifications (continued)

Enclosure	Type 4X/IP66 certified polyester painted aluminum alloy 360, vented for ranges P08-P14
Faceplate	UV-resistant pressure sensitive keypad and display overlay
Cover	Polyester painted aluminum with tempered glass insert
Conduit	Two 3/4" NPT conduit openings
Display	Backlit • Local 4 digit x 0.5" LCD • IAW® (I Am Working) status • Process variable • Units of measure • Switch status • Latch status • Set point value • Deadband value • Min/Max values • Fault codes
Memory	Programming and data protected by non-volatile EEPROM
Sensors	• **Gauge Pressure** – 316L stainless steel, welded diaphragm, 1/2" NPT (female) process connection, micro-machined piezo-resistive strain gauge silicon element, 0.25 mL silicone oil fill. Maximum media temperature: -40 to 257 °F (-40 to 125 °C). Consider use of an instrument siphon when the media temperature exceeds the ONE Series ambient operating temperature range. Consult UE for further guidance. • **Differential Pressure** - 316L stainless steel, welded diaphragms, 1/4" NPT (male) process connections, piezo-resistive strain gauge silicon element, silicone oil fill. Maximum media temperature: -40 to 257 °F (-40 to 125 °C). Consider use of an instrument siphon when the media temperature exceeds the ONE Series ambient operating temperature range. Consult UE for further guidance. • **Temperature** – 316 stainless steel 0.25" OD sheath containing a 100 ohm 4-wire platinum RTD element available with powder fill (local low temp) or powder fill (remote high temp). Media temperature limits: • -40 to 1000 °F, intermittent to 1100 °F (-40 to 538 °C, int. to 593 °C) for TH • -40 to 450 °F, intermittent to 495 °F (-40 to 232 °C, int. to 257 °C) for TL and TR • -300 to 200 °F, intermittent to 220 °F (-184 to 93 °C, int. to 105 °C) for TC • -40 to 900 °F (-40 to 482 °C) for TT
Vacuum	All pressure sensors withstand deep vacuum with no calibration effects. Two compound vacuum ranges are available-P06 and P08 (see page 5)
EMI/RFI	Compliance to CE EMC requirements: EN 61000-6-2, EN 61000-6-4
Emission:	EN 61000-6-4 Class A
Immunity	EN 61000-4-2 Immunity to Electrostatic Discharge EN 61000-4-3 Immunity to Continuous Radiated Disturbances EN 61000-4-4 Immunity to Electrical Fast Transients EN 61000-4-5 Immunity to Surges EN 61000-4-6 Immunity to Continuous Conducted Disturbances EN 61000-4-11 Immunity to Voltage Dips and Interruptions
Weight	4.5 - 6.0 lbs (2,0 - 2,7 kg)
Shock	per MIL-STD-810G method 516.6 – when device is subjected to 15 g (10 mSec) and 40 g (6 mSec); 3 drops/axis Effects: less than +/- 0.40% of range
Vibration	per IEC 61298-3 (field and pipeline applications with high vibration level, 10-1000 Hz range, 0.014" displacement peak amplitude, 5 g acceleration amplitude) Effects: less than +/- 0.40% of range

Pressure Models

Pressure models										
All models are 316L stainless steel wetted material with ½" NPT female process connection; piezo-resistive strain gauge sensor with silicone oil fill.										
Model	Adjustable Set Point Range [1]		Max Over Range Pressure [2]		Proof Pressure [3]		Display Resolution [4]			
	(psig)	(bar)	(psig)	(bar)	(psig)	(bar)	("wc)	(bar)	(KPa)	(kg/cm^2)
P06	-14.70 to 30.00	-1014 to 2068 mbar	52.35	3609 mbar	60	4136 mbar	831	2068 mbar	206,8	2,109
P08	-14.7 to 100.0	-1 to 6,89	157.3	10,84	200	13,79	2771	6,89	689	7,03
P10	0 to 5.000	0 to 344,7 mbar	7.500	517,1 mbar	10	689,5 mbar	138.5	344,7 mbar	34,47	0,352
P11	0 to 15.00	0 to 1034 mbar	22.50	1551 mbar	30	2068 mbar	415.5	1034 mbar	103,4	1,055
P12	0 to 30.00	0 to 2068 mbar	45.00	3103 mbar	60	4137 mbar	831	2068 mbar	206,8	2,109
P13	0 to 50.00	0 to 3447 mbar	75.00	5171 mbar	100	6895 mbar	1385	3447 mbar	344,7	3,515
P14	0 to 100.0	0 to 6,89	150.0	10,30	200	13,80	2771	6,89	689	7,03
P15	0 to 300.0	0 to 20,68	450.0	31,00	600	41,40	-	20,70	2068	21,09
P16	0 to 500.0	0 to 34,47	750.0	51,70	1000	68,95	-	34,47	3447	35,16
P17	0 to 1000	0 to 68,9	1500	103,4	2000	137,9	-	68,9	6.89 MPa	70,3
P18	0 to 3000	0 to 206,8	4500	310,3	6000	413,7	-	206,8	20,68 MPa	210,9
P19	0 to 4500	0 to 310,3	6750	465,4	9000	620,5	-	310,3	31,03 MPa	316,4
P20	0 to 6000	0 to 413,7	9000	620,5	12000	827,4	-	413,7	41,37 MPa	421,8

[1] The upper and lower limits between which the set point can be fully (100%) adjusted.
[2] The pressure or temperature value that models will operate up to before indicating an over range pressure or temperature has been reached, and executing the safe shutdown feature.
[3] The maximum pressure to which a sensor may be occasionally subjected which causes no permanent damage to the sensor.
[4] The resolution of the display for set point value and decimal place for standard (psig, psid) and optional ('wc, "wcd, bar, bar d, KPa, KPa d, kg/cm^2, kg/cm^2 d) units of measure. Please note units of measure exceptions in the range tables above.

Differential Pressure Models

Differential pressure models												
All models are 316L stainless steel wetted material with (2) ¼" NPT male process connections; piezo-resistive strain gauge sensor with silicone oil fill.												
Model	Adjustable Set Point Range [1]		Max Over Range Differential Pressure [2]		Proof Differential Pressure [3]		Max Working Pressure [5]		Display Resolution [4]			
	(psid)	(bar d)	(psid)	(bar d)	(psid)	(bar d)	(psig)	(bar)	("wcd)	(bar d)	(KPa d)	(kg/cm^2 d)
K10	0 to 5.000	0 to 344,7 mbar	7.500	517,1 mbar	10	689,5 mbar	50	3447 mbar	138.5	344,7 mbar	34,47	0,352
K11	0 to 50.00	0 to 3447 mbar	75.00	5171 mbar	100	6895 mbar	500	34,47	1385	3447 mbar	344,7	3,515
K12	0 to 100.0	0 to 6,89	150.0	10,30	200	13,80	1500	103,4	2771	6,89	689	7,03
K13	0 to 200.0	0 to 13,8	300.0	20,70	400	27,60	1500	103,4	NA	13,8	1379	14,06

Temperature Models

Temperature models					
All models include a 4-wire, 100 Ω platinum RTD/DIN 0.00385 with 0.25" OD, 316 stainless steel sheath					
Model	Adjustable Set Point Range [1]		Max Over Range Temperature [2]		Sensor Description
	°F	°C	°F	°C	
TL1	-40 to 450	-40 to 232	495	257	Local (stem) mounted rigid to enclosure, 4" (101,6 mm) sheath length
TL2					Local (stem) mounted rigid to enclosure, 6" (152,4 mm) sheath length
TL3					Local (stem) mounted rigid to enclosure, 10" (254 mm) sheath length
TR1					Remote mounted, 6' (1.8 m) fixed-length MI extension with 2.5" (63,5 mm) bulb
TRC					Remote mounted, 1 to 30' (0.3 to 9,1 m) MI extension (SPECIFY LENGTH) with 2.5" (63,5 mm) bulb
TH1	-40 to 1000	-40 to 538	1100	593	Remote mounted, 6' (1,8 m) fixed-length MI extension with 2.5" (63,5 mm) sheath
THC					Remote mounted, 1 to 30' (0,3 to 9,1 m) MI extension (SPECIFY LENGTH) with 2.5" (63,5 mm) sheath
TC1*	-300 to 200	-184 to 93	220	105	Remote mounted, 6' (1,8 m) fixed-length MI extension with 2.5" (63,5 mm) sheath
TCC*					Remote mounted, 1 to 30' (0,3 to 9,1 m) MI extension (SPECIFY LENGTH) with 2.5" (63,5 mm) sheath
TTC	-40 to 900	-40 to 482	[6]	[6]	Local (stem) mounted spring-loaded, NUN connection lengths from 4 to 10" (101,6 to 254 mm) in 1" (25,4 mm) increments and with variable sheath length (L) up to 36" (0,91 m) – SPECIFY NUN AND SHEATH LENGTH. A thermowell is required.

*Calibration certificate is not available for these models.
[1] The upper and lower limits between which the set point can be fully (100%) adjusted.
[2] The pressure, differential pressure or temperature value that models will operate up to before indicating an over range pressure, differential pressure or temperature has been reached, and executing the safe shutdown feature.
[3] The maximum pressure or differential pressure to which a sensor may be occasionally subjected which causes no permanent damage to the sensor.
[4] The resolution of the display for set point value and decimal place for standard (psig, psid) and optional ('wc, "wcd, bar, bar d, KPa, KPa d, kg/cm^2, kg/cm^2 d) units of measure. Please note units of measure exceptions in the range tables above.
[5] The maximum pressure that may be applied to both the low and high side process ports simultaneously. Differential pressure between the low and high side process ports should not exceed the differential over range pressure.
[6] Not recommended to exceed the upper limit of range.

Option Codes

<table>
<tr><th>Options #</th><th>Description</th></tr>
<tr><td>QC1</td><td>Certificate of Conformance provides calibration verification for the switch set points and the 4-20 mA output using 3-point data collection for pressure and temperature models.</td></tr>
<tr><td>M041</td><td>Dual Seal - Provides secondary process seal for all pressure and differential pressure models.</td></tr>
<tr><td>M201</td><td>Factory programmed set point, deadband and switch mode (For Open on Rise or Open on Fall modes, all 3 settings are required at time of ordering - see example below).
<table>
<tr><th>Set Point [1]</th><th>Deadband [1]</th><th>Switch Mode</th></tr>
<tr><td>40.00</td><td>25.00</td><td>OPEN ON RISE</td></tr>
</table>
For WINDOW modes, all 4 settings are required when ordering - see example below:
<table>
<tr><th>Set Point High [1]</th><th>Deadband High [1]</th><th>Set Point Low [1]</th><th>Deadband Low [1]</th></tr>
<tr><td>60.00</td><td>12.00</td><td>18.00</td><td>10.00</td></tr>
</table></td></tr>
<tr><td>M270</td><td>Display units, degrees C for temperature models</td></tr>
<tr><td>M275</td><td>Display units, inches of water column</td></tr>
<tr><td>M276</td><td>Display units, bar or mbar</td></tr>
<tr><td>M277</td><td>Display units, kPa or MPa</td></tr>
<tr><td>M278</td><td>Display units, kg/cm^2</td></tr>
<tr><td>M438</td><td>EN 10204 type 2.1 Declaration of Material Compliance</td></tr>
<tr><td>M439</td><td>EN 10204 type 3.1 Declaration of Material Compliance with specific Material Certifications</td></tr>
<tr><td>M444</td><td>Paper tag</td></tr>
<tr><td>M446</td><td>Stainless Steel tag</td></tr>
<tr><td>M449</td><td>Mounting bracket for pipe or wall. Use part number 6361-704 if ordered separately. See page 9 for additional information.</td></tr>
<tr><td>M550</td><td>Oxygen service cleaning. Cleaned in accordance with ASTM G93, verification type 1, tests 1-3.</td></tr>
<tr><td>W073</td><td>1/2” NPT male compression fitting for use with all TL sensors, see page 8 for additional information.</td></tr>
<tr><td>W074</td><td>1/2” NPT male union connector for use with all TR, TH and TC sensors, see page 8 for additional information.</td></tr>
<tr><td>W081</td><td>Thermowell adapter - Adapts 3/8" Thermowell to 1/4" sensor sheath, see page 8 for additional information.</td></tr>
<tr><td>W930</td><td>1/2” NPT male to G1/2 male adapter for use with gauge pressure sensors P06-P20. Use part number 6361-762 if ordered separately.</td></tr>
<tr><td>W932</td><td>1/4” NPT female to G1/2 male adapter for use with differential pressure sensors K10-K13. Use part number 6361- 763 if ordered separately (2 required)</td></tr>
</table>

[1] Four digits must be entered for each set point and deadband. Please refer to the display resolution chart on pages 5 & 6 for the correct number of decimal places allowed for the sensor range and units of measure selected.

Union Connector Options

	W073	W074
	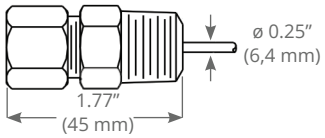	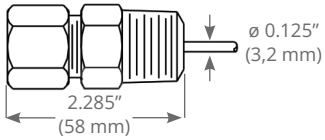
MODEL	1/2" NPT compression fitting with ferrule to fit 0.25" sensor sheath	1/2" NPT union connection to fit 0.125" sensor extension cable
2SLP	TLx	TRx , THx, TCx

Thermowell Adapter Option W081

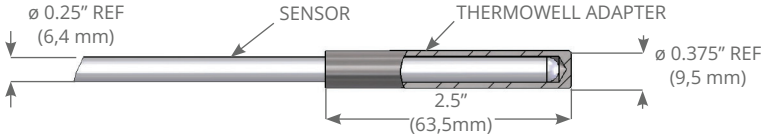

Thermowells

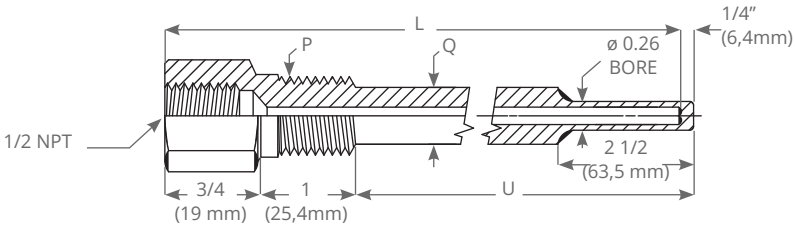

					Local Temperature Sensors w/ 0.25" Sensor Sheath			Remote Temperature Sensors w/ 0.125" Diameter MI Cable
Thermowell UE Part #	Length (L) Inches	P (NPT)	Q	U	TL1 (4")	TL2 (6")	TL3 (10")	TR, TH & TC
1S260 L2.5-316	2.5	1/2	5/8	1	W073	W073	W073	W074
1S260 L4-316	4	1/2	5/8	2.5	-	W073	W073	W074
1S260 L4.5-316	4.5	1/2	5/8	3	-	W073	W073	W074
1S260 L5.5-316	5.5	1/2	5/8	4	-	-	W073	W074
1S260 L6-316	6	1/2	5/8	4.5	-	-	W073	W074
1S260 L6.5-316	6.5	1/2	5/8	5	-	-	W073	W074
1S260 L9-316	9	1/2	5/8	7.5	-	-	-	W074
1S260 L9.5-316	9.5	1/2	5/8	8	-	-	-	W074
1S260 L12-316	12	1/2	5/8	10.5	-	-	-	W074
1S260 L15-316	15	1/2	5/8	13.5	-	-	-	W074
1S260 L18-316	18	1/2	5/8	16.5	-	-	-	W074
1S260 L24-316	24	1/2	5/8	22.5	-	-	-	W074
2S260 L2.5-316	2.5	3/4	3/4	1	W073	W073	W073	W074
2S260 L4-316	4	3/4	3/4	2.5	-	W073	W073	W074
2S260 L6-316	6	3/4	3/4	4.5	-	-	W073	W074
2S260 L9-316	9	3/4	3/4	7.5	-	-	-	W074
2S260 L12-316	12	3/4	3/4	10.5	-	-	-	W074
2S260 L15-316	15	3/4	3/4	13.5	-	-	-	W074
2S260 L18-316	18	3/4	3/4	16.5	-	-	-	W074
2S260 L24-316	24	3/4	3/4	22.5	-	-	-	W074

Dimensional Drawings

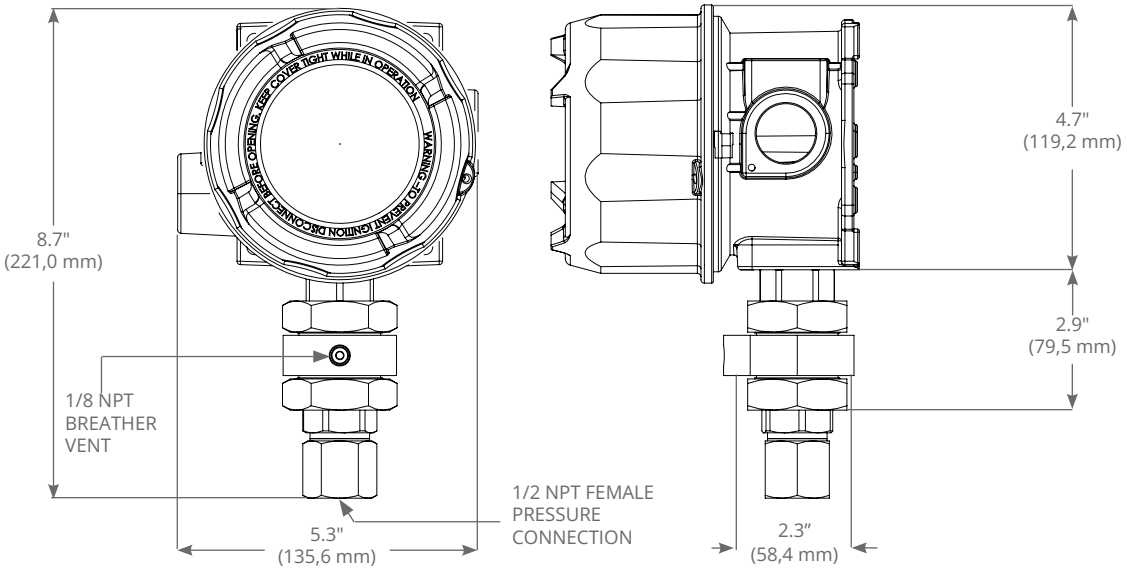

Dual Seal option M041 and gauge pressure sensor

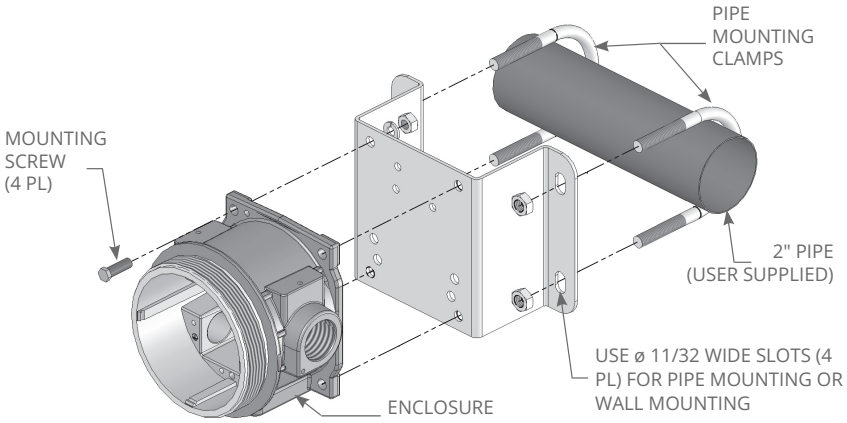

Wall or Pipe Mounting Bracket
Option M449 or part #6361-704

WARNING: The One Series unit must be secured to a wall or pipe. Do not use the sensor to support the instrument.

Pressure Sensors

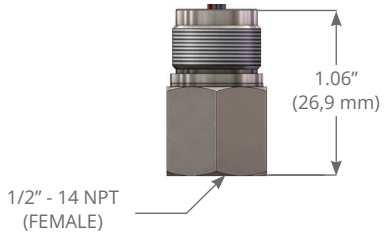

Gauge Pressure Sensors

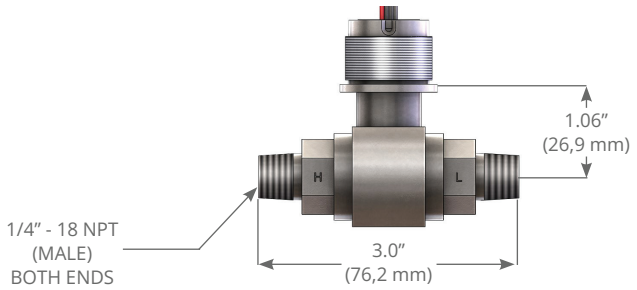

Differential Pressure Sensors

Temperature Sensors

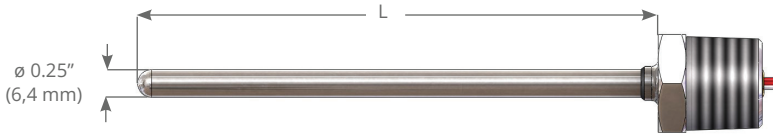

TL1 to TL3

Model	L (Inches)	L (mm)
TL1	4”	101,6
TL2	6”	152,4
TL3	10”	254

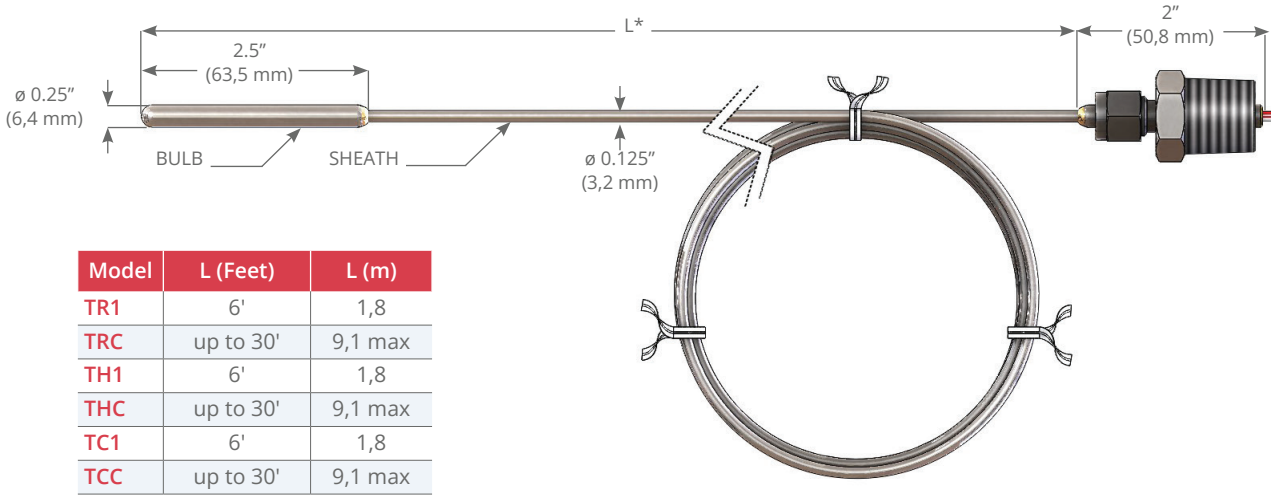

Model	L (Feet)	L (m)
TR1	6'	1,8
TRC	up to 30'	9,1 max
TH1	6'	1,8
THC	up to 30'	9,1 max
TC1	6'	1,8
TCC	up to 30'	9,1 max

* Length includes loop

Remote Sensors

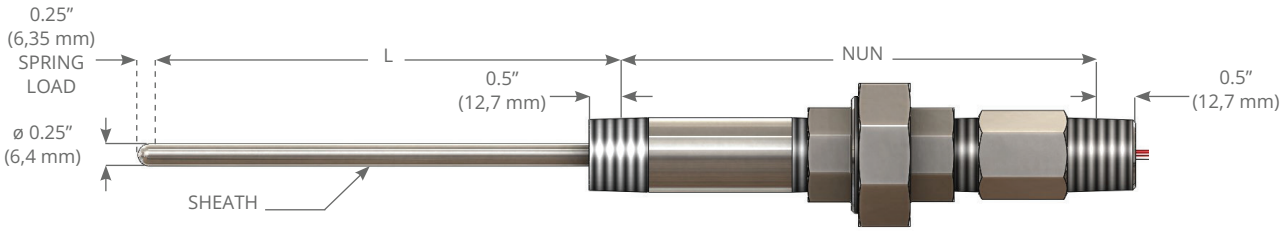

TTC Sensors

L = 36" max., NUN = 4 to 10” (101,6 to 254 mm) in 1” (25,4 mm) increments

Certifications

Agency	Region	Classification
		Models 2SLP
UL/CSA	North America	Class I, Groups A, B, C, & D; Class II, Groups E, F, & G; Class III Class I, Zone 1, AEx d IIC Class I, Zone 1, Ex d IIC **With M041 Dual Seal Option:** Class I, Groups B, C, & D; Class II, Groups E, F, & G; Class III Class I, Zone 1, AEx d IIC Class I, Zone 1, Ex d IIC
ATEX	Europe	II 2 G Ex db IIC T3/T5 Gb [1] II 2 D Ex tb IIIC T90 °C Db Ta = -40 °C to +70 °C
IECEx	International	Ex db IIC T3/T5 Gb [1] Ex tb IIIC T90 °C Db, IP66 Ta = -40 °C to +70 °C
		SIL certified to IEC 61508. Meets the requirements of SIL 2 for random integrity at HFT=0, SIL 3 for random integrity at HFT=1 and SIL 3 for systematic capability when used with IAW terminal connected.

[1] T3 for pressure sensor models P06-P16 only

Optional Certifications

Agency	Region	Option	Classification
			Models 2SLP
PESO	India	N/A	Ex db IIC T3/T5 Gb [1] Ta = -40 °C to +70 °C
INMETRO	Brazil	M391	Ex db IIC T3/T5 Gb [1] Ex tb IIIC T90 °C Db, IP66 Ta = -40 °C to +70 °C
CCC	China	M408	Ex db IIC T3/T5 Gb [1] Ex tb IIIC T90°C Db, IP66 Ta = -40 °C to +70 °C
UKCA	United Kingdom	M462	II 2 G Ex db IIC T3/T5 Gb [1] II 2 D Ex tb IIIC T90 °C Db, IP66 Ta = -40 °C to +70 °C
MoIAT (ECAS)	United Arab Emirates	M463	Ex db IIC T3/T5 Gb [1] Ex tb IIIC T90 °C Db, IP66 Ta = -40 °C to +70 °C

[1] T3 for pressure sensor models P06-P16 only

UE is a registered trademark of United Electric Controls Company.
The following trademarks are property of the respective companies:

Aflas	Asahi Glass Co., LTD
Kapton, **Kalrez**	Du Pont De Nemours, Inc.
Monel	Huntington Alloys Corp.
Hastelloy	Haynes International, Inc.
NACE	AMPP Global Center, Inc.
Teflon, Viton	The Chemours Co.

TERMS AND CONDITIONS OF SALE

UE specifications subject to change without notice.

UNITED ELECTRIC CONTROLS

180 Dexter Avenue
Watertown, MA 02472 - USA
Telephone: 617 926-1000 - Fax: 617 926-2568
www.ueonline.com

FOR A LIST OF OUR INTERNATIONAL AND DOMESTIC REGIONAL SALES OFFICES PLEASE VISIT OUR WEBPAGE WWW.UEONLINE.COM