UNITED ELECTRIC CONTROLS

120 Series

Explosion-proof pressure, vacuum, differential pressure and temperature switches

United Electric Controls is ISO 9001:2015 certified

RoHS compliant

Find metric version at ueonline.com

120-B 15

Table of Contents

Specifications ..... page 3
Models ..... page 5
Options ..... page 13
Sensors ..... page 18
Dimensional drawings ..... page 21
Certifications ..... page 23

Use the following pages to determine the best switch for your applications then build your part number.

Glossary of Terms

Set Point	The value at which the switch is set to actuate. Switches may be set to actuate on rising or falling pressure or temperature.
Deadband	The difference in pressure or temperature between which the switch actuates and de-actuates. Deadband is not adjustable unless specifically noted.
Adjustable Set Point Range	The pressure or temperature range within which the set point can be adjusted.
Over Range Pressure	The maximum pressure that may be applied continuously without causing the set point to shift.
Proof Pressure	The maximum pressure that may be occasionally applied without causing damage. May cause the set point to shift resulting in the need for re-adjustment.
Differential Proof Pressure	The maximum pressure difference that may be applied between the high and low ports of a differential pressure switch without causing damage. May cause the set point to shift resulting in the need for re-adjustment.
Working Pressure	The maximum pressure that may be applied simultaneously to the high and low ports. **Note:** In addition to the Working Pressure limit, the Adjustable Set point Range must be maintained.

Building a Part Number

EXAMPLE: J120-551-M201

Type: Switch type from table below:

Type	
Pressure	
J120	One SPDT; epoxy coated enclosure; internal adjustment, dual conduits
H121	One SPDT; epoxy coated enclosure; external adjustment with reference dial, single conduit
H122	Two SPDT; epoxy coated enclosure; external adjustment with reference dial, single conduit
Differential Pressure	
J120K	One SPDT; epoxy coated enclosure; internal adjustment, dual conduits
H121K	One SPDT; epoxy coated enclosure; external adjustment with reference dial, single conduit
H122K	Two SPDT; epoxy coated enclosure; external adjustment with reference dial, single conduit
Temperature	
B121	Immersion stem; one SPDT; epoxy coated enclosure; external adjustment with reference dial, single conduit
B122	Immersion stem; two SPDT; epoxy coated enclosure; external adjustment with reference dial, single conduit
C120	Immersion stem; one SPDT; epoxy coated enclosure; internal adjustment, dual conduits
E121	Bulb and capillary; one SPDT; epoxy coated enclosure; external adjustment with reference dial, single conduit
E122	Bulb and capillary; two SPDT; epoxy coated enclosure; external adjustment with reference dial, single conduit
F120	Bulb and capillary; one SPDT; epoxy coated enclosure; internal adjustment, dual conduits

Model: Select the range and materials best for your application

J120 ..... page 5-7
H121 / H122 ..... page 8-9
J120K ..... page 10
H121K / H122K ..... page 11
Temperature models ..... page 12

Options: Select any of available options for your switch

J120 and J120K ..... page 13-14
H121/H122 and H121K / H122K ..... page 15
Temperature models ..... page 16-17

Specifications

Electrical Ratings

Models	Electrical Ratings
Standard Models	
All	15A @ 125/250/480 VAC
Adjustable Deadband Models	
15623, 15731-15737, 15884,15622, 15834-15839, 15875	20A @ 125/250/480 VAC
Heat Trace Models	
B121-13272, B122-13322, E121-13273, E122-13321	22A @ 125/250/480 VAC; ½ HP @ 125 VAC; 1 HP @ 250 VAC

Models	VDC Electrical Data*
Standard Models	
All	2A Res. & 1A inductive @24-30 VDC; 0.5 Res. & 0.03 Inductive @ 125 VDC

* VDC values are not UL rated, listed or stated on nameplates unless indicated. Published VDC values are based upon testing and/or experience.

Switch Options	Electrical Ratings
0140 (1A Gold Contact)	1A @ 125 VAC
0500 (5A Low Deadband)	5A @ 480 VAC; 1/8 HP @ 125 VAC; ¼ HP @ 250 VAC
1010 (10A 250 VAC DPDT)	10A @ 125/250 VAC; 2A @480 VAC; 1/2A @125 VDC; 1/4A @ 250 VDC; 1/8 HP @125 VAC; ¼ HP @ 250 VAC
1070 (10A 125 VDC)	10A @ 125 VAC OR VDC; ¼ HP @ 125VAC OR VDC
1180 (Hermetic SPDT)	11A @125/250 VAC; ¼ HP @ 125/250 VAC; 5A @ 30 VDC
1190 (Hermetic DPDT, Rise)	11A @125/250 VAC; ¼ HP @ 125/250 VAC; 5A @ 30 VDC
1195 (Hermetic DPDT, Fall)	11A @125/250 VAC; ¼ HP @ 125/250 VAC; 5A @ 30 VDC
1519 (Adj. Deadband)	15A @125/250/480 VAC; 1/2A @ 125 VDC; 1/4A @ 250 VDC; 1/8 HP @ 125 VAC; 1/4HP @ 250 VAC
1535 (High Ambient to 250°F/121°C)	15A @125/250/480 VAC; 1/8 HP @125 VAC; 1/4HP @ 250 VAC
2000 (20A 480 VAC)	20A @125/250/480 VAC; 1/4A @250 VDC; 1/2A @ 125 VDC; 3/4 HP @ 125 VAC; 1 1/2HP @ 250 VAC
3000 (30A 277 VAC)	30A @125/250/277 VAC; 1 HP @125 VAC; 2 HP @ 250 VAC

Set point repeatability (% of full scale)

Temperature	Type B, C & F	± 1%
	Type E	± 2%
Presssure & Differential	450 - 457, 550 - 559	± 0.5%
	36 - 39, 183 - 194, 483 - 494, 544 - 548, 565 - 567, 612 - 680, 15875	± 1.5%
	All Others	± 1%

Set point typically shifts less than 1% of range for a 50 °F (28 °C) ambient temperature change; less than 2% for Types E121 & E122.

Temperature Limits [2]

Model	Ambient	Storage
36 - 39, 520 - 525, 540 - 548, 701 - 705, 15834 - 15839	0 to 160 °F (-17 to 71 °C)	-65 to 160 °F (-54 to 71 °C)
All others	-58 to 160 °F (-50 to 71 °C)	-65 to 160 °F (-54 to 71 °C)

[2] Consider use of an instrument siphon when the media temperature exceeds the ambient, operating temperature range. Consult UE for further guidance.

Shock	Set point repeats after 15 G, 10 msec duration
Vibration	Set point repeats after 2.5 G, 5-500 Hz
Enclosure	Die cast aluminum, epoxy powder coated; gasketed; cover lock Internal set point lock standard on types J, C, F; gasketed stainless steel tamper-resistant dial cover on types B, H, E; Aluminum nameplate.
Enclosure classification	Certified to enclosure type 4X. Class I, Division 1 product meets enclosure type 7; Class II, Division 1 product meets enclosure type 9. Certified to IP66 requirements. See Certifications (page 23) for hazardous location information.
Switch Output	One or two SPDT; Dual switch may be separated up to 100% of range. Switch may be wired normally open or closed.
Reference Scales	Types B, E, & H external dial. Scale divisions vary with range (see model charts).
Electrical connection	Type H, B, E: one 3/4" NPT connection with terminal block. Type J, C, F: two 3/4" NPT connections with terminal block.

Deadband	Refer to model charts for details.
Differential pressure indicator	Option M210: Available for H121K and H122K. Accuracy approximately 1% at 50% range, 3% at ends; window is plexiglass and gasketed; indicator may be field adjusted approximately ±1% accuracy at any set point within range.
Alternate materials for wetted parts	The materials listed below are available on some switch models as an alternate material for wetted parts. Changes may affect the low end of range, deadband and temperature limits of the 120 series switches. Please consult UE when selecting these materials. **Aflas®** **Hastelloy®** **Polyether / Polyurethane** **Aluminum** **Kalrez®** **Stainless Steel** **Brass** **Kapton®** **Teflon®** **Buna-N** **Monel®** **Viton®** **EPDM/EPR** **Phosphor Bronze**

Specifications

Weight (lbs.)

Pressure models		
Type	Model	Approximate Weight
J120	126-164, 171-174, 188-194, 270-274, 356-376, 488-489, 490-494, 565-567, 612-616, 680, 701-705, 15622, 15834-15839, 15622	4.5 lbs
	183-186, 483-486, S126B-S164B	5 lbs
	450-454, 550-555	6 lbs
	520-525, 530-535	8.5 lbs
H121	126-164, 270-274, 358-376, 612-614, 15875	5 lbs
	S126B-S164B, 701-705	5.5 lbs
	450-454, 550-555	7 lbs
H122	126-164, 270-274, 358-376, 612-614, 15875	5.5 lbs
	S126B-S164B, 701-705	6 lbs
	450-454, 550-555	7.5 lbs

Differential pressure models		
Type	Model	Approximate Weight
J120K	455-457, 559	6 lbs
	367	6.5 lbs
	36-39, 147-157	7 lbs
	S147B-S157B	7.5 lbs
	540-548	10 lbs
H121K	456-457, 559	7 lbs
	147-157	8 lbs
	S147B-S157B	8.5 lbs
H122K	456-457, 559	7.5 lbs
	147-157	8.5 lbs
	S147B-S157B	9 lbs

Temperature models		
Type	Model	Approximate Weight
C120	120, 121	4 lbs
B121	120, 121, 13272	5.5 lbs
B122	120, 121, 13322	6 lbs
F120	2BS-8BS	5 lbs
E121	2BSA-8BS, 13273	6 lbs
E122	2BSA-8BS, 13321	6.5 lbs

Type J120

Vacuum and Ultra Low Pressure Models (Vacuum to 250"wc)

PRESSURE				PROCESS CONNECTION				
Adjustable Set Point	Deadband	Over Range	Proof	Wetted Material	Thread	Orifice [1]	Sensor Style	Model
("Hg)	("Hg)	(psi)	(psi)		NPT (F)	Inches		
30 to 3 Vac	0.1 to 0.4	3	225	Teflon; Viton; 316L SS	1/4"	0.22"	G	**550**
30 to 3 Vac	0.2 to 0.6	3	5	Brass; nickel plated brass; zinc plated steel	1/4"	0.06"	A	**126**
30 to 3 Vac	0.1 to 0.3	3	225	316L SS; Buna-N	1/4"	0.22"	G	**450**
30 to 3 Vac	0.2 to 0.6	3	5	Welded 316L SS	1/2"	0.12"	B	**S126B**
("wc)	("wc)	(psi)	(psi)		NPT (F)			
300 Vac to 0	0.2 to 8	100	100	Buna-N; Epoxy coated Al [2]	1/2"	0.72"	H	**520**
300 Vac to 0	0.2 to 15	50	100	Welded 316L SS	1/2"	0.72"	I	**530**
10 Vac to 10	0.1 to 0.6	100	100	Buna-N; Epoxy coated Al [2]	1/2"	0.72"	H	**521**
10 Vac to 10	0.1 to 0.6	50	100	Welded 316L SS	1/2"	0.72"	I	**531**
0.5 to 5	0.1 to 0.3	100	100	Buna-N; Epoxy coated Al [2]	1/2"	0.72"	H	**523**
0.5 to 5	0.1 to 0.3	50	100	Welded 316L SS	1/2"	0.72"	I	**533**
50 Vac to 50	0.1 to 3	100	100	Buna-N; Epoxy Coated Al [2]	1/2"	0.72"	H	**522**
50 Vac to 50	0.1 to 3	50	100	Welded 316L SS	1/2"	0.72"	I	**532**
2.5 to 50	0.1 to 0.8	100	100	Buna-N; Epoxy coated Al [2]	1/2"	0.72"	H	**524**
2.5 to 50	0.1 to 0.8	50	100	Welded 316L SS	1/2"	0.72"	I	**534**
2 to 80	1 to 4	3	225	Teflon; Viton; 316SS	1/4"	0.22"	G	**551**
2 to 80	0.8 to 2	3	225	Buna-N; Aluminum	1/4"	0.22"	G	**451**
15 to 80	2 to 6	3	5	Brass; Ni pl. Brass	1/4"	0.06"	A	**137**
15 to 80	2 to 6	3	5	Welded 316L SS	1/2"	0.12"	B	**S137B**
10 to 250	0.1 to 6	100	100	Buna-N; Epoxy coated Al [2]	1/2"	0.72"	H	**525**
10 to 250	0.1 to 10	50	100	Welded 316L SS	1/2"	0.72"	I	**535**

[1] Large 0.72" orifice can be used to provide clean-out. Small 0.06" orifice can be used to dampen pulsations from the process.

[2] Alternate wetted materials available.

Type J120

Pressure Models (up to 100 psi)

PRESSURE				PROCESS CONNECTION				
Adjustable Set Point (psi)	Deadband (psi)	Over Range (psi)	Proof (psi)	Wetted Material	Thread NPT (F)	Orifice [1] Inches	Sensor Style	Model
30" Hg Vac to 20 psi	0.2 to 0.5" Hg	20	225	Teflon; Viton; 316L SS	1/4"	0.22"	G	**552**
30" Hg Vac to 20 psi	0.2 to 0.6" Hg	20	25	Brass; nickel plated brass; zinc plated steel	1/4"	0.06"	A	**134**
30" Hg Vac to 20 psi	0.1 to 0.4" Hg	20	225	316L SS; Buna-N	1/4"	0.22"	G	**452**
30" Hg Vac to 20 psi	0.2 to 0.6" Hg	20	25	316L SS	1/2"	0.12"	B	**S134B**
0.5 to 20	0.1 to 0.2	20	225	Teflon; Viton; 316L SS	1/4"	0.22"	G	**553**
0.5 to 20	0.05 to 0.1	20	225	Buna-N; Aluminum	1/4"	0.22"	G	**453**
0.5 to 20	0.1 to 0.3	20	25	Brass; Ni pl. Brass	1/4"	0.06"	A	**144**
0.5 to 20	0.1 to 0.3	20	25	316L SS	1/2"	0.12"	B	**S144B**
1 to 20	0.1 to 1	500	1000	316L SS	1/2"	0.72"	C	**171** [2]
1 to 20	0.3 to 2.5	500	1000	316 SS; 316L SS Viton [4]	1/2"	0.72"	D	**183**
1 to 20	0.3 to 2.5	500	1000	316 SS; 316L SS Viton [4]	1/2"	0.06"	D	**483**
0.8 to 30	0.1 to 0.3	30	225	Teflon; Viton; 316L SS	1/4"	0.22"	G	**554**
0.8 to 30	0.05 to 0.2	30	225	Buna-N; Aluminum	1/4"	0.22"	G	**454**
1.5 to 30	1 to 2	500	600	Buna-N; Ni pl. Brass [4]	1/4"	0.06"	J	**701**
3 to 30	1.5 to 5	500	1000	Buna-N; Ni pl. Brass	1/4"	0.06"	J	**15834** [3]
5 to 30	1 to 5	1000	1500	Welded 316L SS	1.5" sanitary fitting		K	**565**
5 to 30	1 to 6	1500	2500	316 SS	1/2"	0.72"	E	**190**
5 to 30	1 to 6	1500	2500	316 SS	1/2"	0.06"	E	**490**
1 to 50	0.1 to 0.5	50	75	Brass; Ni pl. Brass	1/4"	0.06"	A	**152**
1 to 50	0.1 to 0.5	50	75	316L SS	1/2"	0.12"	B	**S152B**
2 to 50	0.1 to 1.5	500	1000	316L SS	1/2"	0.72"	C	**172** [2]
2 to 50	0.3 to 3	500	1000	316 SS; 316L SS Viton [4]	1/2"	0.72"	D	**184**
2 to 50	0.3 to 3	500	1000	316 SS; 316L SS Viton [4]	1/2"	0.06"	D	**484**
2 to 100	0.2 to 0.4	100	225	Teflon; Viton; 316L SS	1/4"	0.22"	G	**555**
2 to 100	0.2 to 0.6	100	125	Brass; Ni pl. Brass	1/4"	0.06"	A	**156**
2 to 100	0.2 to 0.6	100	125	316L SS	1/2"	0.12"	B	**S156B**
3 to 100	1 to 5	500	600	Buna-N; Ni pl. Brass [4]	1/4"	0.06"	J	**702**
4 to 100	0.1 to 2.5	500	1000	316L SS	1/2"	0.72"	C	**173** [2]
4 to 100	0.5 to 6	500	1000	316 SS; 316L SS Viton [4]	1/2"	0.72"	D	**185**
4 to 100	0.5 to 6	500	1000	316 SS; 316L SS Viton [4]	1/2"	0.06"	D	**485**
5 to 100	3 to 9	500	600	Buna-N; Ni pl. Brass	1/4"	0.06"	J	**15835** [3]
10 to 100	1 to 12	1000	1500	Welded 316L SS	1.5" sanitary fitting		K	**566**
10 to 100	1 to 15	1500	2500	316 SS	1/2"	0.72"	E	**191**
10 to 100	1 to 15	1500	2500	316 SS	1/2"	0.06"	E	**491**
15 to 100	0.7 to 1.8	100	800	316L SS	1/4"	0.06"	F	**356**

[1] Large 0.72" orifice can be used to provide clean-out. Small 0.06" orifice can be used to dampen pulsations from the process.
[2] The use of metallic diaphragms where higher pressure shock or heavy cycling is expected should be avoided, and not used where system or start-up vacuum might exceed 26 " Hg Vac.
[3] Model includes adjustable deadband switch.
[4] Alternate wetted materials available.

Type J120

Pressure Models (up to 5000 psi)

PRESSURE				PROCESS CONNECTION				
Adjustable Set Point (psi)	Deadband (psi)	Over Range (psi)	Proof (psi)	Wetted Material	Thread NPT (F)	Orifice [1] Inches	Sensor Style	Model
4 to 200	1 to 4	200	250	Ph. Bronze; Ni pl. Brass	1/4"	0.06"	F	**270**
4 to 200	0.2 to 1	200	200	Brass; Ni pl. Brass	1/4"	0.06"	A	**164**
4 to 200	0.2 to 1	200	200	316L SS	1/2"	0.12"	B	**S164B**
8 to 200	0.1 to 3.5	500	1000	316L SS	1/2"	0.72"	C	**174** [2]
8 to 200	1 to 11	500	1000	316 SS; 316L SS; Viton [5]	1/2"	0.72"	D	**186**
8 to 200	1 to 11	500	1000	316 SS; 316L SS; Viton [5]	1/2"	0.06"	D	**486**
15 to 200	1 to 6	200	800	316L SS	1/4"	0.06"	F	**358**
20 to 200	12 to 26	500	1000	316 SS; Viton	1/4"	0.06"	J	**15622** [3]
6 to 300	1 to 5	300	350	Ph. Bronze; Ni pl. Brass	1/4"	0.06"	F	**274**
9 to 300	1 to 7	500	600	Buna-N; Ni pl. Brass [5]	1/4"	0.06"	J	**703**
9 to 300	4 to 16	500	1000	Buna-N; Ni pl. Brass	1/4"	0.06"	J	**15836** [3]
15 to 300	3 to 22	1000	1500	Welded 316L SS	1.5" sanitary fitting		K	**567**
15 to 300	3 to 25	1500	2500	316 SS	1/2"	0.72"	E	**192**
15 to 300	3 to 25	1500	2500	316 SS	1/2"	0.06"	E	**492**
20 to 300	1 to 7	300	800	316L SS	1/4"	0.06"	F	**361**
15 to 500	2 to 11	1500	2500	Buna-N; Ni pl. Brass [5]	1/4"	0.06"	J	**704**
15 to 500	8 to 31	1500	2500	Buna-N; Ni pl. Brass	1/4"	0.06"	J	**15837** [3]
20 to 500	4 to 45	1500	2500	316 SS	1/2"	0.72"	E	**193**
20 to 500	4 to 45	1500	2500	316 SS	1/2"	0.06"	E	**493**
25 to 500	1.5 to 8	500	800	316L SS	1/4"	0.06"	F	**376**
30 to 1000	3 to 22	1500	2500	Buna-N; Ni pl. Brass [5]	1/4"	0.06"	J	**705**
30 to 1000	9 to 90	1500	2500	Buna-N; Ni pl. Brass	1/4"	0.06"	J	**15838** [3]
50 to 1000	10 to 125	2000	7000	316 SS; 316L SS; Viton [5]	1/2"	0.72"	E	**188**
50 to 1000	10 to 125	2000	7000	316 SS; 316L SS; Viton [5]	1/2"	0.06"	E	**488**
80 to 1700	5 to 150	2000	2500	316 SS	1/2"	0.72"	E	**194**
80 to 1700	5 to 150	2000	2500	316 SS	1/2"	0.06"	E	**494**
100 to 1700	25 to 100	2000	2500	Buna-N; Ni pl. Brass	1/4"	0.06"	J	**15839** [3]
100 to 1700	9 to 40	1700	2500	316 SS	1/4"	0.06"	F	**680** [6]
125 to 3000	40 to 250	6000	10000	316 SS, Buna-N	1/4"	0.06"	J	**612** [4]
250 to 3500	20 to 300	4000	7000	316 SS; 316L SS; Viton [5]	1/2"	0.72"	E	**189**
250 to 3500	20 to 300	4000	7000	316 SS; 316L SS; Viton [5]	1/2"	0.06"	E	**489**
700 to 5000	40 to 375	6000	10000	316 SS, Buna-N	1/4"	0.06"	J	**616** [4]

[1] Large 0.72" orifice can be used to provide clean-out.Small 0.06" orifice can be used to dampen pulsations from the process.
[2] The use of metallic diaphragms where higher pressure shock or heavy cycling is expected should be avoided, not used where system or start-up vacuum might exceed 26 " Hg Vac.
[3] Model includes adjustable deadband switch.
[4] Not recommended for gas service due to potential drying of O-ring.
[5] Alternate wetted materials available.
[6] Not recommended for rapid, high cycle applications.

Type H121/H122

Vacuum and Ultra Low Pressure Models (Adjustable range Vacuum to 80”wc)

PRESSURE					PROCESS CONNECTION				
Adjustable Set Point	Deadband	Over Range	Proof	Dial Division	Wetted Material	Thread	Orifice [1]	Sensor Style	Model
(“Hg)	(“Hg)	(psi)	(psi)	(“Hg)		NPT (F)	Inches		
30 to 0 Vac	0.1 to 0.6	3	225	0.5	Teflon; Viton; 316L SS	1/4"	0.22"	G	**550**
30 to 0 Vac	0.2 to 0.9	3	5	0.5	Brass; nickel plated brass; zinc plated steel	1/4"	0.06"	A	**126**
30 to 0 Vac	0.1 to 0.4	3	225	0.5	316L SS; Buna-N	1/4"	0.22"	G	**450**
30 to 0 Vac	0.2 to 0.9	3	5	0.5	Welded 316L SS	1/2"	0.12"	B	**S126B**
("wc)	("wc)	(psi)	(psi)	(“wc)		NPT (F)			
2 to 80	2 to 10	3	5	2	Brass; Ni pl. Brass	1/4"	0.06"	A	**137** [2]
2 to 80	2 to 10	3	5	2	Welded 316L SS	1/2"	0.12"	B	**S137B** [2]

[1] Small 0.06” orifice can be used to dampen pulsations from the process.
[2] Only availble as H121.

Type H121/H122

Pressure Models (up to 6000 psi)

PRESSURE					PROCESS CONNECTION				
Adjustable Set Point (psi)	Deadband (psi)	Over Range (psi)	Proof (psi)	Dial Division ("Hg)	Wetted Material	Thread NPT (F)	Orifice [1] Inches	Sensor Style	Model
30" Hg Vac to 20	0.2 to 1" Hg	20	225	1" Hg & 0.5 psi	Teflon; Viton; 316L SS	1/4"	0.22"	G	**552**
30" Hg Vac to 20	0.2 to 1.2" Hg	20	25	1" Hg & 0.5 psi	Brass; nickel plated brass; zinc plated steel	1/4"	0.06"	A	**134**
30" Hg Vac to 20	0.2 to 1" Hg	20	225	1" Hg & 0.5 psi	316L SS; Buna-N	1/4"	0.22"	G	**452**
30" Hg Vac to 20	0.2 to 1.2" Hg	20	25	1" Hg & 0.5 psi	Welded 316L SS	1/2"	0.12"	B	**S134B**
0 to 20	0.05 to 0.3	20	225	0.5	Teflon; Viton; 316L SS	1/4"	0.22"	G	**553**
0 to 20	0.05 to 0.2	20	225	0.5	Buna-N; Aluminum	1/4"	0.22"	G	**453**
0 to 20	0.1 to 0.5	20	25	0.5	Brass; Ni pl. Brass	1/4"	0.06"	A	**144**
0 to 20	0.1 to 0.5	20	25	0.5	Welded 316L SS	1/2"	0.12"	B	**S144B**
0 to 30	0.1 to 0.4	30	225	0.5	Teflon; Viton; 316L SS	1/4"	0.22"	G	**554**
0 to 30	0.05 to 0.3	30	225	0.5	Buna-N; Aluminum	1/4"	0.22"	G	**454**
0 to 30	0.1 to 0.6	40	40	0.5	Brass; Ni pl. Brass	1/4"	0.06"	A	**146**
0 to 30	0.1 to 0.6	40	40	0.5	Welded 316L SS	1/2"	0.12"	B	**S146B**
3 to 30	1 to 3	500	600	0.5	Buna-N; Ni pl. Brass [2]	1/4"	0.06"	J	**701** [5]
0 to 100	0.25 to 0.75	100	225	2	Teflon; Viton; 316L SS	1/4"	0.22"	G	**555**
0 to 100	0.2 to 0.8	100	125	2	Brass; Ni pl. Brass	1/4"	0.06"	A	**156**
0 to 100	0.2 to 0.8	100	125	2	Welded 316L SS	1/2"	0.12"	B	**S156B**
10 to 100	1 to 5	500	600	2	Buna-N; Ni pl. Brass [2]	1/4"	0.06"	J	**702**
0 to 200	1.5 to 8	200	250	5	Ph. Bronze; Ni pl. Brass	1/4"	0.06"	L	**270**
0 to 200	0.3 to 2	200	200	5	Brass; Ni pl. Brass	1/4"	0.06"	A	**164**
0 to 200	0.3 to 2	200	200	5	Welded 316L SS	1/2"	0.12"	B	**S164B**
0 to 200	1.5 to 8	200	800	5	316L SS	1/4"	0.06"	L	**358**
0 to 300	2 to 10	300	350	10	Ph. Bronze; Ni pl. Brass	1/4"	0.06"	L	**274**
0 to 300	2 to 9	300	800	10	316L SS	1/4"	0.06"	L	**361**
30 to 300	2 to 7	500	1000	10	Buna-N; Ni pl. Brass [2]	1/4"	0.06"	J	**703**
0 to 500	3 to 12	500	800	10	316L SS	1/4"	0.06"	L	**376**
50 to 500	3 to 12	1500	2500	10	Buna-N; Ni pl. Brass [2]	1/4"	0.06"	J	**704**
200 to 1000	5 to 25	1500	2500	25	Buna-N; Ni pl. Brass [2]	1/4"	0.06"	J	**705**
200 to 3000	40 to 250	6000	10000	50	316 SS, Buna-N	1/4"	0.06"	J	**612** [4]
500 to 6000	150 to 750	6000	10000	100	303 SS, Buna-N	1/4"	0.06"	L	**15875** [3] [4] [5]
500 to 6000	50 to 600	6000	10000	100	316 SS, Buna-N	1/4"	0.06"	J	**614** [4]

[1] Small 0.06" orifice can be used to dampen pulsations from the process.
[2] Alternate wetted materials available.
[3] Model includes adjustable deadband switch.
[4] Not recommended for gas service due to potential drying of O-ring.
[5] Only available as H121.

Type J120K

Low Differential Pressure Models (up to 200”wcd)

PRESSURE				PROCESS CONNECTION				Model
Adjustable Set Point (“wcd)	Deadband (“wc)	Working Pressure (psi)	Proof (psi)	Wetted Material	Thread NPT (F)	Orifice Inches	Sensor Style	
0.2 to 7	0.05 to 0.6	30 “Hg to 200	400	Buna-N; Aluminum [1]	1/8"	0.12"	DF	**540**
1 to 20	0.1 to 1	30 “Hg to 200	400	Buna-N; Aluminum [1]	1/8"	0.12"	DF	**541**
5 to 50	0.2 to 2.5	30 “Hg to 200	400	Buna-N; Aluminum [1]	1/8"	0.12"	DF	**542**
5 to 80	1 to 4	30 “Hg to 225	225	Buna-N; Aluminum	1/4"	0.12"	DD	**455**
10 o 200	0.5 to 8	30 “Hg to 200	400	Buna-N; Aluminum [1]	1/8"	0.12"	DF	**543**

[1] Stainless steel wetted material with option M476.

Differential Pressure Models (up to 500 psid)

PRESSURE				PROCESS CONNECTION				Model
Adjustable Set Point (psid)	Deadband (psi)	Working Pressure (psi)	Proof (psi)	Wetted Material	Thread NPT (F)	Orifice Inches	Sensor Style	
2 to 20	0.1 to 0.3	30 “Hg to 225	225	Buna-N; Aluminum	1/4"	0.12"	DD	**456**
2 to 20	0.1 to 1.3	30 “Hg to 1200	2500	Buna-N; Aluminum [1]	1/8"	0.12"	DG	**544**
3 to 30	1 to 5	0 to 350	1000	316 SS; Buna-N	1/4"	0.06"	DB	**36**
3 to 30	0.3 to 1.5	30 “Hg to 100	180	Brass; Ni pl. Brass	1/4"	0.06"	DC	**147**
3 to 30	0.3 to 1.5	30 “Hg to 100	300	316L SS	1/2"	0.12"	DE	**S147B**
3 to 30	0.1 to 0.4	30 “Hg to 225	225	Buna-N; Aluminum	1/4"	0.12"	DD	**457**
5 to 50	0.2 to 2.2	30 “Hg to 1200	2500	Buna-N; Aluminum [1]	1/8"	0.12"	DG	**545**
10 to 100	0.5 to 2	30 “Hg to 150	180	Brass; Ni pl. Brass	1/4"	0.06"	DC	**157**
10 to 100	0.5 to 2	30 “Hg to 180	300	316L SS	1/2"	0.12"	DE	**S157B**
10 to 100	2 to 8	0 to 500	1000	316 SS; Buna-N	1/4"	0.06"	DB	**37**
10 to 100	4 to 10	0 to 350	500	316L SS	1/4"	0.06"	DA	**367**
10 to 100	0.2 to 1	30 “Hg to 225	225	Buna-N; Teflon; Aluminum	1/4"	0.12"	DD	**559**
10 to 125	0.4 to 5	30 “Hg to 1200	2500	Buna-N; Aluminum [1]	1/8"	0.12"	DG	**546**
50 to 250	0.8 to 10	30 “Hg to 1200	2500	Buna-N; Aluminum [1]	1/8"	0.12"	DG	**547**
30 to 300	2 to 15	0 to 1000	2500	316 SS; Buna-N	1/4"	0.06"	DB	**38**
50 to 500	3 to 20	0 to 1000	2500	316 SS; Buna-N	1/4"	0.06"	DB	**39**
100 to 500	2 to 15	30 “Hg to 1200	2500	Buna-N; Aluminum [1]	1/8"	0.12"	DG	**548**

[1] Stainless steel wetted material with option M476.

Type H121K/H122K

Differential Pressure Models (up to 500 psid)

PRESSURE					PROCESS CONNECTION				Model
Adjustable Set Point (psid)	Deadband (psi)	Working Pressure (psi)	Proof (psi)	Dial Division (psi)	Wetted Material	Thread NPT (F)	Orifice Inches	Sensor Style	
2 to 20	0.1 to 0.3	30 “Hg to 225	225	0.5	Buna-N; Aluminum	1/4"	0.12"	DD	**456**
3 to 30	0.3 to 2	30 “Hg to 100	180	0.5	Brass; Ni pl. Brass	1/4"	0.06"	DC	**147**
3 to 30	0.3 to 2	30 “Hg to 100	300	0.5	316L SS	1/2"	0.12"	DE	**S147B**
3 to 30	0.1 to 0.4	30 “Hg to 225	225	0.5	Buna-N; Aluminum	1/4"	0.12"	DD	**457**
10 to 100	0.5 to 3	30 “Hg to 150	180	2	Brass; Ni pl. Brass	1/4"	0.06"	DC	**157**
10 to 100	0.5 to 3	30 “Hg to 180	300	2	316L SS	1/2"	0.12"	DE	**S157B**
10 to 100	0.2 to 1	30 “Hg to 225	225	2	Buna-N; Teflon; Aluminum	1/4"	0.12"	DD	**559**

Type B121 & B122, C120

TEMPERATURE				STEM			Model
Adjustable Set Point (°F)	Max (°F)	Dial Div. [1] (°F)	Deadband @70 °F TYP	Material	Size [2] (Diameter x Length)	Sensor Style	
0 to 225	275	5	2%	Ni plated brass	9/16" x 1-7/8" below 1/2" NPT	TA	**120**
0 to 225	275	5	2%	316SS	9/16" x 1-7/8" below 1/2" NPT	TA	**120 + M504**
200 to 425	475	5	2%	Ni plated brass	9/16" x 1-7/8" below 1/2" NPT	TA	**121**
200 to 425	475	5	2%	316SS	9/16" x 1-7/8" below 1/2" NPT	TA	**121 + M504**
15 to 140	160	2	2%	304SS	9/16" x 2-11/16" long	TA	**13272 (B121 only)** [3]
15 to 140	160	2	2%	304SS	9/16" x 2-11/16" long	TA	**13322 (B122 only)** [3]

[1] Dial available on B121 and B122 only.
[2] Optional immersion stem length available. Consult UE.
[3] Heat tracing

Type E121 & E122

TEMPERATURE				BULB			Model
Adjustable Set Point (°F)	Max (°F)	Dial Div. (°F)	Deadband @70 °F TYP	Material [2]	Size (Diameter x Length)	Sensor Style [4]	
-120 to 100	150	5	2%	304SS	3/8 x 2-5/8"	TB	**2BSA**
30 to 250	300	5	2%	304SS	3/8 x 2-5/8"	TB	**2BSB**
100 to 400	450	5	2%	304SS	3/8 x 2-1/8"	TB	**3BS**
25 to 100	150	2	2%	304SS	3/8 x 6-3/4"	TB	**4BS**
-20 to 80	130	2	2%	304SS	3/8 x 5"	TB	**5BS**
350 to 640	690	5	2%	304SS	3/8 x 3-1/4"	TB	**8BS**
25 to 325	360	5	2%	304SS	1/4 x 9-1/2"	TB	**13273 (E121 only)** [6]
25 to 325	360	5	2%	304SS	1/4 x 9-1/2"	TB	**13321 (E122 only)** [6]

[4] Standard capillary length is 6ft, except models 13321 and 13273 which are 10 ft. Optional capillary lengths available. Consult UE.
[5] Optional stainless steel armored or Teflon covered capillary available. Consult UE.
[6] Heat tracing

Type F120

TEMPERATURE			BULB			Model
Adjustable Set Point (°F)	Max (°F)	Deadband @70 °F TYP	Material	Size (Diameter x Length)	Sensor Style [7] [8]	
-125 to 350	400	1%	304SS	3/8 x 2-5/8"	TB	**2BS**
-125 to 500	550	1%	304SS	3/8 x 2-1/8"	TB	**3BS**
-40 to 120	170	1%	304SS	3/8 x 6-3/4"	TB	**4BS**
-40 to 180	230	1%	304SS	3/8 x 5"	TB	**5BS**
0 to 250	300	1%	304SS	3/8 x 4-1/2"	TB	**6BS**
0 to 400	450	1%	304SS	3/8 x 3"	TB	**7BS**
50 to 650	700	1%	304SS	3/8 x 3-1/4"	TB	**8BS**

[7] Standard capillary length is 6ft ±1" . Optional capillary lengths available. Optional capillary length tolerance is ± 1" per every 10' in length. Consult UE.
[8] Optional stainless steel armored or Teflon covered capillary available. Consult UE.

Pressure Options

J120 & J120K

Option	Description	J120 Models																					J120K Models						
		126-164	171-174	183-186	188-189	190-194	270-274	356-376	450-454	483-486	488-489	490-494	520-525	530-535	550-555	565-567	612-616	680	701-705	15622	15834-15839	S126B-S164B	36 - 39	147 - 157	367	455 - 457	540-548	559	S147B - S157B
Switch options																													
0140	1A Gold Contact	●	●	●	●	●	●	●	●	●	●	●	●	●	●	●	●	●	●			●	●	●	●	●	●	●	●
0500 [1]	5A low Deadband	●	●	●	●	●	●	●	●	●	●	●			●	●	●	●	●			●	●	●	●	●		●	●
1010 [1]	10A 250 VAC DPDT	●					●	●	●						●		●		●			●		●		●		●	●
1070 [1]	10A 125 VDC	●					●	●	●						●		●	●	●					●	●	●	●	●	●
1180 [1]	11A Hermetic switch SPDT	●	●	●	●	●	●	●	●	●	●	●	●	●	●	●	●	●	●			●	●	●	●	●	●	●	●
1190 [1]	11A Hermetic switch DPDT, set on Rise	●	●	●	●	●	●	●	●	●	●	●	●	●	●	●	●	●	●			●	●	●	●	●	●	●	●
1195 [1]	11A Hermetic switch DPDT, set on fall	●	●	●	●	●	●	●	●	●	●	●	●	●	●	●	●	●	●			●	●	●	●	●	●	●	●
1519 [1][2]	Adjustable deadband	●					●	●	●						●			●	●			●	●	●	●	●	●	●	●
1535	High ambient up to 250 °F (121 °C) 15A 250 VAC resistive	●	●	●	●	●	●	●	●	●	●	●			●	●	●	●	●			●	●	●	●	●	●	●	●
2000 [1]	20A 480 VAC	●	●	●	●	●	●	●	●	●	●	●			●	●	●	●	●			●	●	●	●	●		●	●
3000 [1]	30A 277 VAC	●					●	●	●						●		●	●	●			●							
Miscellaneous options																													
M201 [3]	Factory set one switch	●	●	●	●	●	●	●	●	●	●	●	●	●	●	●	●	●	●	●	●	●	●	●	●	●	●	●	●
M277	Range in KPa/MPa	●	●	●	●	●	●	●	●	●	●	●	●	●	●	●	●	●	●	●	●	●	●	●	●	●	●	●	●
M278	Range in Kg/cm^2	●	●	●	●	●	●	●	●	●	●	●	●	●	●	●	●	●	●	●	●	●	●	●	●	●	●	●	●
M400	SIL2 certification	●	●	●	●	●	●	●	●	●	●	●	●	●	●	●	●	●	●			●	●	●	●	●	●	●	●
M401	NACE® MR0175 [1]		●	●		●				●	●																		
M438	EN 10204 type 2.1 Declaration of Material Compliance [4]	●	●	●	●	●	●	●	●	●	●	●	●	●	●	●	●	●	●	●	●	●	●	●	●	●	●	●	●
M439	EN 10204 type 3.1 Declaration of Material Compliance with specific Material Certifications [4]	●	●	●	●	●	●	●	●	●	●	●	●	●	●	●	●	●	●	●	●	●	●	●	●	●	●	●	●
M444	Paper ID tag	●	●	●	●	●	●	●	●	●	●	●	●	●	●	●	●	●	●	●	●	●	●	●	●	●	●	●	●
M446	Stainless steel tag	●	●	●	●	●	●	●	●	●	●	●	●	●	●	●	●	●	●	●	●	●	●	●	●	●	●	●	●
M449	Mounting bracket												●	●													●		
M550	O_2 service cleaning [5][6]	●	●	●	●	●	●	●	●	●	●	●	●	●	●	●	●	●	●			●	●	●	●		●		●

● Available

[1] Deadbands will decrease or increase with these switch options. Consult UE.

[2] Adjustable deadband switches are shipped with the minimum deadband setting as default. If M201 factory setpoint option is selected, the desired deadband must be provided with the set-point and if switched on rise or fall.

[3] Factory setpoint requires the setpoint, units, and rise or fall setting to be specified at the time of order. Selection of switch options may require additional information, consult UE.

[4] Not available on models 194 and 494.

[5] O-ring changes to Viton, diaphragm material may change to Viton or Teflon, and pressure connection may change to 316 stainless steel depending on model. Deadband and low end of range may increase; ambient temperature limits may be affected. Consult UE.

[6] O_2 cleaning in accordance with ASTM G93, verification type 1, tests 1-3.

Pressure Options

J120 & J120K

Option	Description	J120 Models																					J120K Models						
		126-164	171-174	183-186	188-189	190-194	270-274	356-376	450-454	483-486	488-489	490-494	520-525	530-535	550-555	565-567	612-616	680	701-705	15622	15834-15839	S126B-S164B	36 - 39	147 - 157	367	455 - 457	540-548	559	S147B - S157B
Wetted material options																													
M319	Diaphragm seal (consult UE)	●	●	●	●	●	●	●	●	●	●	●	●	●	●	●	●	●	●			●	●	●	●	●	●	●	●
M476	Stainless diff. diaphragm																										●		
M540 [1]	Standard + Viton								●								●		●				●			●	●		
M913	1/4" NPT(F) stainless steel				●																	●							
M914	1/2" NPT(F) stainless steel							●									●												
XC001 [1]	Aluminum; Viton; Viton [1]												●																
XC002 [2]	Aluminum; Kapton; Buna N												●																
XC003 [1]	Aluminum; Kapton; Viton [1]												●																
XC004 [1]	316LSS; 316LSS; Viton [1]												●																
XC005 [1]	316LSS; Viton; Viton [1]												●																
XC007 [1]	316LSS; Teflon; Viton [1]												●																
XD002	Hastelloy C276 diaphragm			●	●					●	●																		
XD003	Monel 400 diaphragm			●	●					●	●																		
XP112	Hastelloy C276 press. Conn.			●	●					●	●																		
XP113	Monel 400 press. Conn.			●	●					●	●																		
XR211 [2]	Kalrez O-ring seal			●	●					●	●																		
XR213 [2]	EPR O-ring seal			●	●					●	●																		
XR214 [2]	Aflas O-ring seal			●	●					●	●																		
Accessories																													
6361-704	Mounting bracket kit	●	●	●	●	●	●	●	●	●	●	●			●	●	●	●	●	●	●	●	●	●	●	●		●	●
6361-761	1/4" NPT to G1/2 male adapter	●					●	●	●						●	●	●	●	●	●	●		●	●	●	●		●	
6361-762	1/2" NPT to G1/2 male adapter		●	●	●	●				●	●	●	●	●								●							●

● Available

[1] O-ring changes to Viton, diaphragm material may change to Viton or Teflon, and pressure connection may change to 316 stainless steel depending on model. Deadband and low end of range may increase; ambient temperature limits may be affected. Consult UE.

[2] Deadbands will decrease or increase with these switch options. Consult UE.

Pressure Options

H121 / H122 & H121K / H122K

Option	Description	PRESSURE																			DIFFERENTIAL PRESSURE							
		H121 Models										H122 Models									H121K models				H122K models			
		15875	126 - 164	270 - 274	358 - 376	450 - 454	550 - 555	612 - 614	701 - 705	704 - 705	S126B - S164B	126 - 164	270 - 274	358 - 376	450 - 454	550 - 555	612 - 614	701 - 705	704 - 705	S126B - S164B	147 - 157	456 - 457	559	S147B - S157B	147 - 157	456 - 457	559	S147B - S157B
Switch options																												
0140	1A Gold Contact		●	●	●	●	●	●	●	●	●	●	●	●	●	●	●	●	●	●	●	●	●	●	●	●	●	●
0500 [1]	5A low Deadband		●	●	●	●	●	●	●	●	●	●	●	●	●	●	●	●	●	●	●	●	●	●	●	●	●	●
1010 [1]	10A 250 VAC DPDT		●	●	●	●	●	●	●	●	●										●	●	●	●	●			
1070 [1]	10A 125 VDC		●	●	●	●	●	●	●	●	●	●	●	●	●	●	●	●	●	●	●	●	●	●	●			
1180 [1]	11A Hermetic switch SPDT		●	●	●	●	●	●	●	●	●																	
1190 [1]	11A Hermetic switch DPDT, set on rise		●	●	●	●	●	●	●	●	●																	
1195 [1]	11A Hermetic switch DPDT, set on fall		●	●	●	●	●	●	●	●	●																	
1535	High ambient up to 250 °F (121 °C) 15A 250 VAC resistive		●	●	●	●	●	●	●	●	●	●	●	●	●	●	●	●	●	●	●	●	●	●	●	●	●	●
2000 [1]	20A 480 VAC		●	●	●	●	●	●	●	●	●	●	●	●	●	●	●	●	●	●	●	●	●	●	●	●	●	●
Miscellaneous options																												
M201 [2]	Factory set one switch	●	●	●	●	●	●	●	●	●	●										●	●	●	●				
M202 [2]	Factory set two switches											●	●	●	●	●	●	●	●	●					●	●	●	●
M210	DP Indicator																				●			●	●			●
M277	Range in KPa/MPa		●	●	●	●	●	●	●	●	●	●	●	●	●	●	●	●	●	●	●	●	●	●	●	●	●	●
M278	Range in Kg/cm²		●	●	●	●	●	●	●	●	●	●	●	●	●	●	●	●	●	●	●	●	●	●	●	●	●	●
M400	SIL2 certification	●	●	●	●	●	●	●	●	●	●	●	●	●	●	●	●	●	●	●	●	●	●	●	●	●	●	●
M438	EN 10204 type 2.1 Declaration of Material Compliance	●	●	●	●	●	●	●	●	●	●	●	●	●	●	●	●	●	●	●	●	●	●	●	●	●	●	●
M439	EN 10204 type 3.1 Declaration of Material Compliance with specific Material Certifications	●	●	●	●	●	●	●	●	●	●	●	●	●	●	●	●	●	●	●	●	●	●	●	●	●	●	●
M444	Paper ID tag		●	●	●	●	●	●	●	●	●	●	●	●	●	●	●	●	●	●	●	●	●	●	●	●	●	●
M446	Stainless Steel Tag	●	●	●	●	●	●	●	●	●	●	●	●	●	●	●	●	●	●	●	●	●	●	●	●	●	●	●
M550 [3] [4]	O_2 service cleaning		●	●	●	●	●	●	●		●	●	●	●	●	●	●	●		●	●			●	●			●
Pressure Connection Materials																												
M319	Diaphragm seal (Consult UE)		●	●	●	●	●	●	●	●	●	●	●	●	●	●	●	●	●	●	●	●	●	●	●	●	●	●
M540 [3]	Standard + Viton					●		●	●						●		●	●				●				●		
M913	1/4" NPT(F) stainless steel										●									●								
M914	1/2" NPT(F) stainless steel			●				●						●			●											
Accessories																												
6361-704	Mounting bracket kit	●	●	●	●	●	●	●	●	●	●	●	●	●	●	●	●	●	●	●	●	●	●	●	●	●	●	●
6361-761	1/4" NPT to G1/2 male adapter	●	●	●	●	●	●	●	●	●		●	●	●	●	●	●	●	●		●	●	●		●	●	●	
6361-762	1/2" NPT to G1/2 male adapter										●									●				●				●

● Available

[1] Deadband will increase or decrease with these switch options. Consult UE.

[2] Factory setpoint requires the setpoint, units, and rise or fall settings to be specified at the time of order. Selection of special switch options may require additional information, consult UE.

[3] O-ring changes to Viton, diaphragm material may change to Viton or Teflon, and pressure connection may change to 316 stainless steel depending on model. Deadband and low end of range may increase; ambient temperature limits may be affected. Consult UE.

[4] O_2 cleaning in accordance with ASTM G93, verification type 1, tests 1-3.

Temperature Options

B, C, E and F temperature model options

Option #	Description	C120	B121		B122		F120	E121		E122	
		120 - 121	120 - 121	13272	120 - 121	13322	2BS - 8BS	2BSA - 8BS	13273	2BSA - 8BS	13321
Switch options											
0140	1A Gold Contact	●	●		●		●	●		●	
0500 [1]	5A low Deadband	●	●		●		●	●		●	
1070 [1]	10A 125 VDC	●	●				●	●		●	
1180 [1]	11A Hermetic switch SPDT	●	●				●	●			
1190 [1]	11A Hermetic switch DPDT, set on Rise	●	●				●	●			
1195 [1]	11A Hermetic switch DPDT, set on fall	●	●				●	●			
1519 [1] [2]	Adjustable deadband	●					●				
1535	High ambient up to 250 °F (121 °C) 15A 250 VAC resistive	●	●		●		●	●		●	
2000	20A 480 VAC	●	●		●		●	●		●	
3000	30A 277 VAC	●					●	●			
Miscellaneous options											
M201 [3]	Factory setting	●	●	●			●	●	●		
M202 [3]	Factory setting				●	●				●	●
M400	SIL2 certification	●	●	●	●	●	●	●	●	●	●
M444	Paper ID tag	●	●	●	●	●	●	●	●	●	●
M446	SS tag	●	●	●	●	●	●	●	●	●	●
M504	316L SS Immersion Stem	●	●		●						
M550 [4]	O_2 service cleaning	●	●		●		●	●		●	
Accessories											
6361-704	Mounting bracket kit	●	●	●	●	●	●	●	●	●	●

● Available
[1] Deadband will increase or decrease with these switch options. Consult UE.
[2] Adjustable deadband switches are shipped with the minimum deadband setting as default. If M201 factory setpoint option is selected, the desired deadband must be provided with the set-point and if switched on rise or fall.
[3] Factory setpoint requires the setpoint, units, and rise or fall settings to be specified at the time of order. Selection of special switch options may require additional information, consult UE.
[4] O_2 cleaning in accordance with ASTM G93, verification type 1, tests 1-3.

Temperature Options

B, C, E and F temperature model options

				Local Stem Models [1]			Bulb and Capillary Models [2]							
Option	Replacement Part #	Material	Description	120	121	13272, 13322	2BS, 2BSA, 2BSB	3BS	4BS	5BS	6BS	7BS	8BS	13273, 13321
Union Connectors for bulb & capillary models														
W027	SD6213-27	Brass	1/2" NPT W/3/4" bushing				●	●	●	●	●	●	●	
W028	SD6213-28	304 SS	1/2" NPT W/3/4" bushing				●	●	●	●	●	●	●	
W045	SD6213-45	Brass	3/4" NPT				●	●	●	●	●	●	●	
W046	SD6213-46	304 SS	3/4" NPT				●	●	●	●	●	●	●	
W051	SD6213-51	Brass	1/2" NPT				●	●	●	●	●	●	●	
W050	SD6213-50	304 SS	1/2" NPT				●	●	●	●	●	●	●	
Thermowells for bulb & capillary models														
W075	SD6225-75	Brass	4" BT, 1/2" NPT with 3/4" NPT adapter bushing				●	●				●	●	
W076	SD6225-76	316 SS	4.5" BT, 3/4" NPT				●	●			●	●	●	
W191	SD6225-191	Brass	4" BT, 1/2" NPT				●	●				●	●	
W193	SD6225-193	316 SS	4.5" BT, 1/2" NPT				●	●			●	●	●	
W118	SD6225-118	Brass	7" BT, 1/2" NPT with 3/4" NPT adapter bushing				●	●	●	●	●	●	●	
W119	SD6225-119	316 SS	7.5" BT, 3/4" NPT				●	●	●	●	●	●	●	
W192	SD6225-192	Brass	7" BT, 1/2" NPT				●	●	●	●	●	●	●	
W177	SD6225-177	316 SS	7.5" BT, 1/2" NPT				●	●	●	●	●	●	●	
Thermowells for all immersion stem models														
W139	SD6225-139	Brass	3/4" NPT x 1-23/32" Below Thread	●	●									
W140	SD6225-140	316 SS	3/4" NPT x 1-23/32" Below Thread	●	●									
W000 [3]		Brass	No thread	●	●									
W097	SD6225-97	Brass	1/2" NPT x 1-23/32" Below Thread	●	●									
W099	SD6225-99	316 SS	1/2" NPT x 1-23/32" Below Thread	●	●									

● Available
[1] Optional stem length and thermowells available. Consult UE.
[2] Optional capillary length, capillary protection, and thermowells available. Consult UE.
[3] Option W000 is a special immersion stem construction that has no external thread. This option may be used with the following UE thermowells W097/W099 or customer supplied thermowell. It is secured with a set-screw.
[5] Make sure that the bulb length is equal or less than the "Below Thread" length of the thermowell.

Sensors

Pressure sensors

A

Bellows sensor with 1/4" NPT (F) pressure connection

Models: 126-164

B

Welded bellows sensor with 1/2" NPT (F) pressure connection

Models: S126B-S164B

C

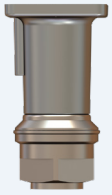

Welded diaphragm sensor with 1/2" NPT (F) pressure connection

Models: 171-174

D

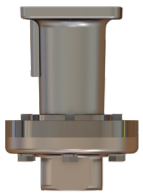

Diaphragm sensor with 1/2" NPT (F) pressure connection

Models: 183-186, 483-486

E

Diaphragm sensor with 1/2" NPT (F) pressure connection

Models: 188-189, 190-194, 488-489, 490-494

F

Bellows sensor with 1/4" NPT (F) pressure connection

Models: 270-376, 680 (J120)

G

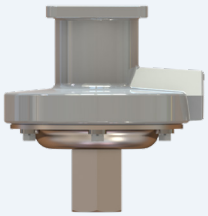

Diaphragm sensor with 1/4" NPT (F) pressure connection

Models: 450-454, 550-555

H

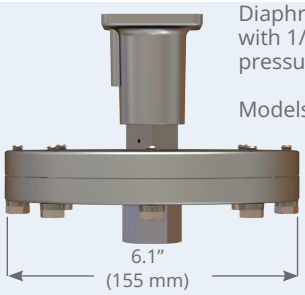

Diaphragm sensor with 1/2" NPT (F) pressure connection

Models: 520-525

I

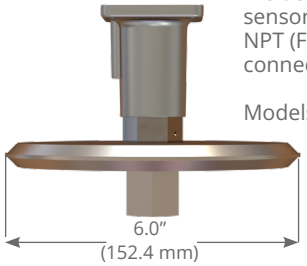

Welded diaphragm sensor with 1/2" NPT (F) pressure connection

Models: 530-535

J

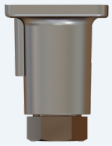

Piston or diaphragm sensor with 1/4" NPT (F) pressure connection

Models: 612-616, 701-705, 15622

K

Diaphragm sensor with 1-1/2" Sanitary fitting pressure connection

Models: 565-567

L

Bellows sensor with 1/4" NPT (F) pressure connection

Models: 270-376 (H121/H122)

Sensors

Differential pressure sensors

DA

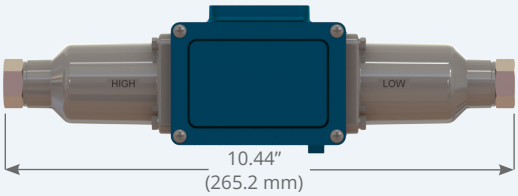

Welded bellows sensor with 1/4" NPT (F) pressure connection

Models: 367

DB

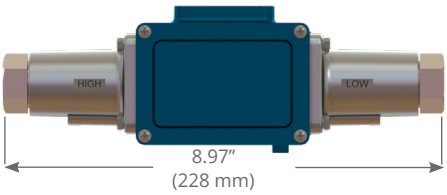

Diaphragm sensor with 1/4" NPT (F) pressure connection

Models: 36-39

DC

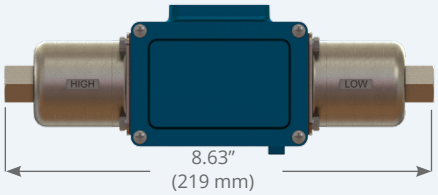

Welded bellows sensor with 1/4" NPT (F) pressure connection

Models: 147-157

DD

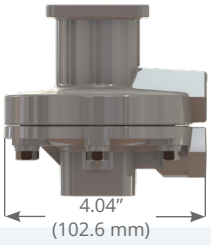

Diaphragm sensor with 1/4" NPT (F) pressure connection

Models: 455-457, 559

DE

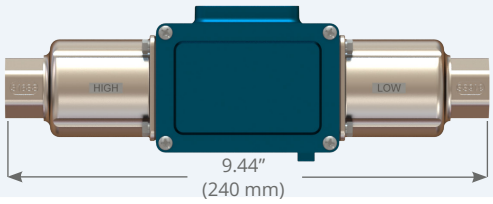

Welded bellows sensor with 1/2" NPT (F) pressure connection

Models: S147B-S157B

DF

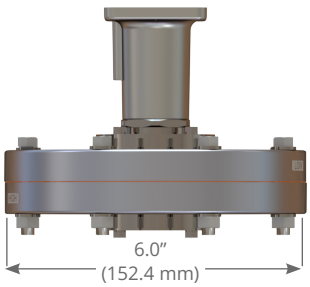

Diaphragm sensor with 1/8" NPT (F) pressure connection

Models: 540-543

DG

Diaphragm sensor with 1/8" NPT (F) pressure connection

Models: 544-548

Sensors

Temperature sensors

TA

Immersion stem with 1/2” NPT (M) pressure connection

Models: 120-121, 13272*, 13322*
* No NPT connection available on these models

TB

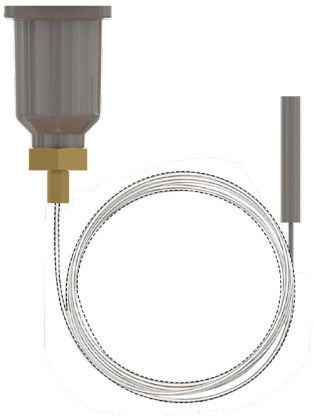

Bulb and capillary for remote installations

Models: 2BS-8BS, 13273, 13321

Types J120, J120K, C120, F120

Internal Set Point Adjustment

Dimension A			
Models	Inches	mm	NPT
Pressure			
126-164	7.25	184.2	1/4
S126B-S164B	7.63	193.3	1/2
171-174	8.72	221.5	1/2
183-186, 483-486	8.41	213.6	1/2
188-189, 488-489	7.47	189.7	1/2
190-194, 490-494	7.44	189.0	1/2
270-274	8.13	206.5	1/4
356-361, 376	8.09	205.5	1/4
450, 452	8.81	223.8	1/4
451, 453, 454	8.06	204.7	1/4
520-525	9.25	235.0	1/2
530-535	8.84	224.5	1/2
550, 552	8.81	223.8	1/4
551, 553-555	8.34	211.8	1/4
565-567	7.53	191.3	1-1/2" Sanitary
612, 616	7.88	200.2	1/4
680	8.13	206.5	1/4
701-705, 15622	7.44	189.0	1/4
Differential Pressure			
36-39, 147-157, 367	7.59	192.8	1/4
S147B-S157B	7.59	192.8	1/2
455-457, 559	8.44	214.4	1/4
540-543	9.34	237.2	1/8
544-548	9.41	239.0	1/8
Temperature			
120-121	9.13	231.9	Immersion Stem
2BS-8BS	8.47	215.1	Bulb & Capillary

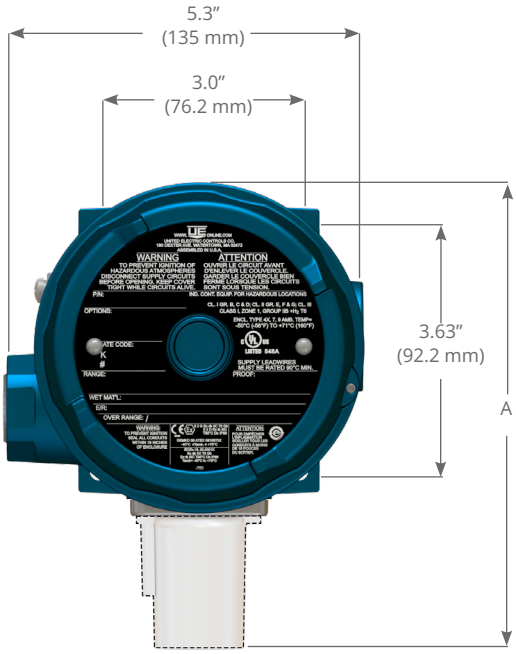

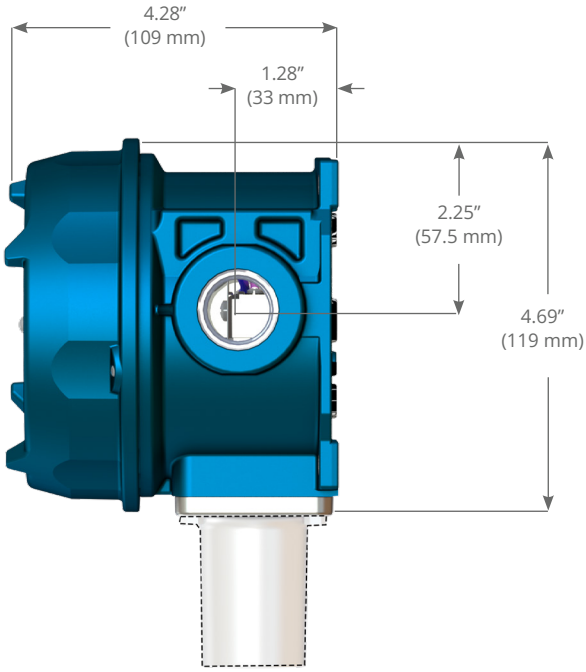

All dimensions stated in inches (millimeters)
Dimensional drawings for all models may be found at www.ueonline.com

Types B121, B122, E121, E122, H121, H122, H121K, H122K

External Set Point Adjustment

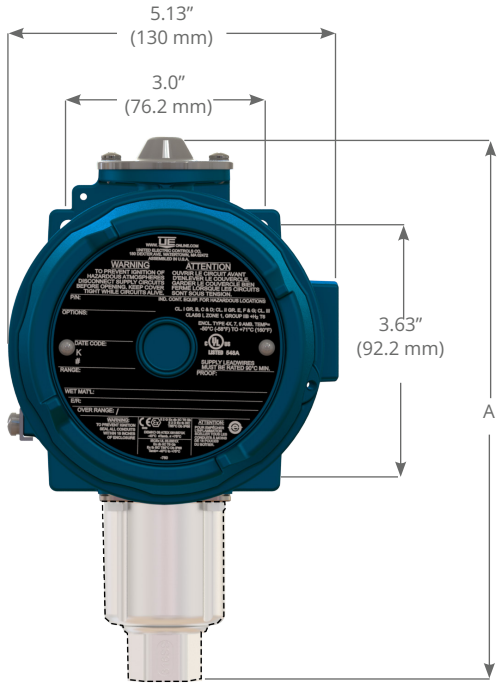

Dimension A			
Models	Inches	mm	NPT
Pressure			
126-164	8.09	205.5	1/4
S126B-S164B	8.50	215.9	1/2
270-274	7.88	200.2	1/4
358-376	7.81	198.4	1/4
450, 452	9.69	246.1	1/4
453, 454	8.94	227.1	1/4
550, 552	9.75	247.7	1/4
553-555	9.31	236.5	1/4
612, 614	8.75	222.3	1/4
701-705	8.31	211.1	1/4
Differential Pressure			
147-157	8.44	214.4	1/4
S147B-S157B	8.44	214.4	1/2
456-457, 559	9.31	236.5	1/4
Temperature			
120,121	10.00	254.0	Immersion Stem
2BS-8BS	9.31	236.5	Bulb & capillary
13272, 13322	10.00	254.0	Immersion Stem (Heat tracing)
13273, 13321	9.31	236.5	Bulb & capillary (Heat tracing)

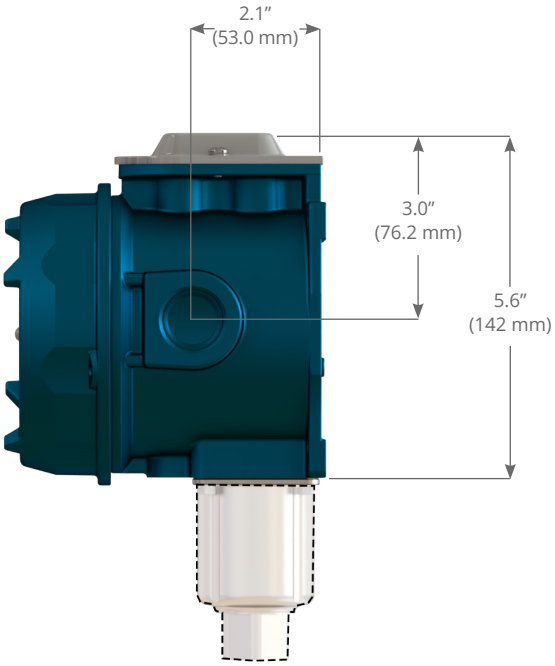

All dimensions stated in inches (millimeters)
Dimensional drawings for all models may be found at www.ueonline.com

Standard Certifications

	Region	Agency	Classification
	North America	UL	Class I, Division 1, Groups B, C & D; Class II, Division 1, Groups E, F & G; Class III, Div. 1 Class I, Zone I, Group IIB + H2 T6 Enclosure Type 4X, IP66 Canadian Registration Number (CRN) for Canadian provinces can be found at www.ueonline.com
	Europe	ATEX	II 2 G Ex db IIC T6 Gb II 2 D Ex tb IIIC T85°C Db, IP66 -40 °C ≤ Ta ≤ +75 °C **For intrinsic safety certification only. Must order option M405 (includes PESO)** II 1 G Ex ia IIC T6 Ga -50 °C ≤ Ta ≤ +60 °C Compliant to Pressure Equipment Directive (PED) (2014/68/EU) Compliant to Low Voltage Directive (LVD) (2014/35/EU)
	International	IECEx	Ex db IIC T6 Gb Ex tb IIIC T85°C Db, IP66 -40 °C ≤ Ta ≤ +75 °C **For intrinsic safety certification only. Must order option M405 (includes PESO)** Ex ia IIC T6 Ga -50 °C ≤ Ta ≤ +60 °C UEC compliant to IEC 61058-1, IEC 61010-1

Regional Certifications

	Country	Option	Classification	
	Brazil	M391	Ex db IIC T6 Gb Ex tb IIIC T85 °C Db, IP66 -40 °C ≤ Ta ≤ +75 °C	Ex ia IIC T6 Ga -50 °C ≤ Ta ≤ +60 °C
	Korea	M395	Ex d IIC T6 Ex tb IIIC T85°C -40 °C ≤ Ta ≤ +75 °C	
	Ukraine	M404	Ex db IIC T6 Gb -40 °C ≤ Ta ≤ +71 °C	
	China	M408	Ex db IIC T6 Gb Ex tb IIIC T85°C Db, IP66 -40 °C ≤ Ta ≤ +75 °C	Ex ia IIC T6 Ga -50 °C ≤ Ta ≤ +60 °C
	India	Standard	Ex db IIC T6 Gb	
		M405	Ex ia IIC T6 Ga	
	United Kingdom	M462	II 2 G Ex db IIC T6 Gb II 2 D Ex tb IIIC T85°C Db, IP66 -40 °C ≤ Ta ≤ +75 °C	II 1 G Ex ia IIC T6 Ga -50 °C ≤ Ta ≤ +60 °C
	Eurasian Economic Union (EAC)	M406	1Ex db IIC T6 Gb X Ex tb IIIC T85°C Db, IP66	0Ex ia IIC T6 Ga X
	United Arab Emirates (ECAS)	M463	Ex db IIC T6 Gb Ex tb IIIC T85°C Db -40°C ≤ Ta ≤ +75°C	Ex ia IIC T6 Ga -50°C ≤ Ta ≤ +60°C
	Taiwan		ITRI available through Taiwanese channel partner. Consult UE.	

UE is a registered trademark of United Electric Controls Company.
The following trademarks are property of the respective companies:

Aflas	Asahi Glass Co., LTD
Kapton, **Kalrez**	DuPont De Nemours, Inc.
Monel	Huntington Alloys Corp.
Hastelloy	Haynes International, Inc.
NACE	AMPP Global Center, Inc.
Teflon, Viton	The Chemours Co.

TERMS AND CONDITIONS OF SALE
UE specifications subject to change without notice.

UNITED ELECTRIC CONTROLS

180 Dexter Avenue
Watertown, MA 02472 - USA
Telephone: 617 926-1000 - Fax: 617 926-2568
www.ueonline.com

FOR A LIST OF OUR INTERNATIONAL AND DOMESTIC REGIONAL SALES OFFICES PLEASE VISIT OUR WEBPAGE WWW.UEONLINE.COM