developing solutions

FISCHER
MESS- UND REGELTECHNIK

Data sheet

MS10

Pressure vacuum switch

09015439 • DB_EN_MS10 • Rev. ST4-B • 11/25

1 Product and functional description

1.1 Delivery scope

- Pressure vacuum switch MS10
- Operating Manual

1.2 Performance characteristics

Typical applications

- Drinking water production, water management
- Procedural technology
- Plant engineering
- Pneumatic transport systems

Main features

- 2 microswitches (as changeover contacts)
- High switching capacity
- Switching function independent of the display
- Vibration-proof
- Long service life
- Durable diaphragm system
- All measuring ranges are overpressure-proof up to 25 bar

1.3 Intended use

The MS10 is an overpressure and vacuum-pressure proof contact pressure gauge for control and monitoring tasks in vacuum technology.

The device may only be used for the purpose stipulated by the manufacturer. The manufacturer will not be liable for damage arising from incorrect or improper use.

Please contact the manufacturer before using this unit with dirty or aggressive media because the media compatibility of the unit needs to be checked.

1.4 Function diagram

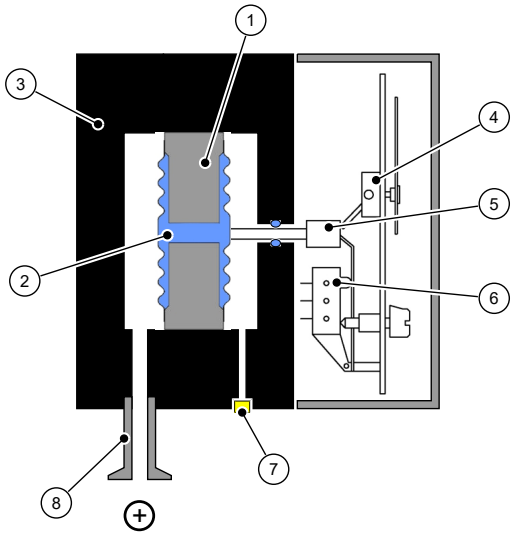

Fig. 1: Function diagram

1	Measuring capsule	2	Hydraulic fluid
3	Pressure chamber	4	Motion train
5	Tappet	6	Micro-switch
7	Sealing plug	8	Process connection

1.5 Design and mode of operation

The measuring element is a measuring capsule with two metal diaphragms that are hydraulically coupled. The diaphragm bulges from its normal position as a result of the applied pressure.

A rod assembly on the side of the measuring capsule that faces away from the measuring material captures the expansion movement proportional to the pressure and transfers it to the motion train and the actuating elements of the microswitches.

In case of an overload the measuring diaphragms in the measuring capsule support one another and protect the device from damage.

2 Technical data

2.1 General Information

Reference conditions (acc. to IEC 61298-1)		
Temperature	+15 … +25 °C	
Relative humidity	45 … 75%	
Air pressure	86 to 106 kPa	860 to 1060 mbar
Installation position	Vertical	Lower pressure connection

General information	
Type designation	MS10
Pressure type	Relative pressure
Measurement principle	Metal diaphragm measurement system, welded
Media	Non-aggressive liquid and gaseous media

2.2 Input variables

Measuring ranges	Measuring accuracy
	(± 2.5% of the measuring range)
-200 to 200 mbar	±10 mbar
0 to 400 mbar	±10 mbar
-1 … 0.6 bar	± 0.04 bar
-1 … 1.5 bar	± 0.0625 bar
-1 … 3 bar	± 0.1 bar
-1 … 5 bar	± 0.15 bar
-1 … 9 bar	± 0.25 bar
-1 … 15 bar	± 0.4 bar
-1 … 24 bar	± 0.625 bar

Rated pressure of the measuring system	25 bar
Max. pressure load *(for all measuring ranges)*	Overpressure safe up to rated pressure of the measuring system
	Vacuum pressure safe up to fine vacuum (10^{-2} mbar)
Zero-point setting	Arranged in the front panel of the scale
Leakage rate	≤ 10^{-7} Pa • m^3/s ≤ 10^{-6} mbar • l/s

2.3 Output parameters

Switch contacts	1 to 2 micro-switches
Switching function (per contact)	Changeover contact
Switch point setting	Can be set to reference scales from outside
Smallest settable value	approx 5% of the measuring span
Switch hysteresis	approx 2.5% of the measuring span

Per contact	**AC**	**DC**
Switching voltage	250 V	30 V
Switching current	5 A	0.4 A
Switching output	250 VA	10 W

2.4 Operating conditions

Ambient temperature	-10 to +70°C
Media temperature	-10 to +70°C
Storage temperature	-15 … +75 °C
Enclosure protection class	IP55 according to EN 60529
LVR	EN 61010-1:2010 +A1:2019+A1:2019/AC:2019
PED	EN 837-3:1996 EN 12516-2:2014+A1:2021
RoHS	EN IEC 63000:2018

2.5 Construction design

Process connection	Small flange KF10 according to DIN 28403 / ISO 2861
Electrical connection	Cable socket
	7-pin plug connection
Dimensions	See dimensional drawings
Weight	2.6 kg

2.5.1 Materials

Parts in contact with the medium	
Pressure chamber	1.4571 CrNi steel
Measuring diaphragm	1.4571 CrNi steel
Process connection	1.4571 CrNi steel (small flange KF10)

Parts with no contact with the medium		
Cable socket / plug		Polyamide 6
Casing		Aluminium anodised
Sealing plug		Sinter bronze
Seals		FKM
Cover hood	IP55	Makrolon
Dial face and needle		Aluminium
Setting buttons		AlCuMgPb 3.1645
Screws		Stainless steel, galvanised steel, passivated

2.5.2 Dimensional drawings

All dimensions in mm unless otherwise stated

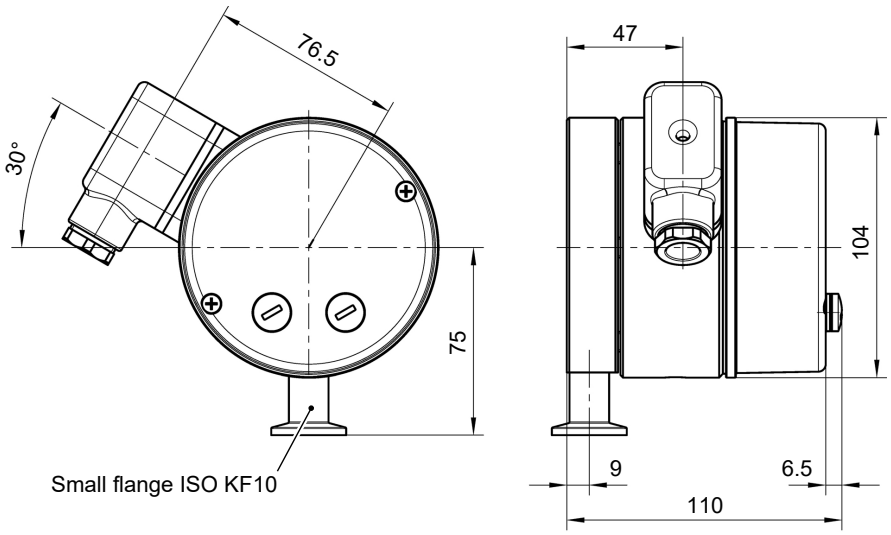

Fig. 2: Dimension drawing

3 Order codes

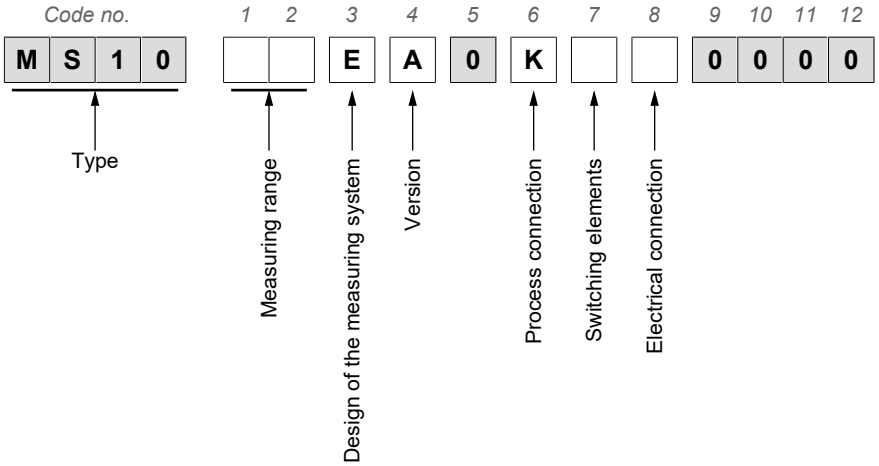

[1.2]	Measuring range
B5	-200 … 200 mbar
83	0 … 400 mbar
32	-1 … 0.6 bar
33	-1 … 1.5 bar
34	-1 … 3 bar
35	-1 … 5 bar
36	-1 … 9 bar
37	-1 … 15 bar
38	-1 … 24 bar
99	Custom measurement range on request

[3]	Design of the measuring system
E	Stainless steel 1.4571 (in contact with media)

[4]	Version
A	Top part of housing aluminium black anodised

[6]	Process connection
K	Small flange ISO KF10

[7]	Switching elements
A	1 adjustable micro-switch
B	2 adjustable microswitches

[8]	Electrical connection
K	Cable socket
W	7-pin plug connection

FISCHER Mess- und Regeltechnik GmbH
Bielefelder Str. 37a
D-32107 Bad Salzuflen
Tel. +49 5222 974-0
www.fischermesstechnik.de
info@fischermesstechnik.de

Technische Änderungen vorbehalten. Subject to technical changes. Sous réserve de modifications techniques.