developing solutions

FISCHER
MESS- UND REGELTECHNIK

CE

RoHS II COMPLIANT

Data sheet

ME50

Programmable pressure transducer / pressure switch

09005260 • DB_EN_ME50 • Rev. ST4-D • 09/25

1 Product and functional description

1.1 Performance characteristics

Important features

- Digital measured value display
- Highly precise
- Low hysteresis
- Can be configured
- Turn down 1:5
- Optional switch output
- Robust device model
- Large vibration resistance

Typical applications

- Pressure monitoring
- Content measurement

Application areas

- Procedural engineering
- Process technology
- Environmental technology
- Regenerative energies (biogas, etc.)

1.2 Use as intended

The ME50 is suitable for measuring relative pressure and under-pressure in fluid or gas-like, neutral, non-aggressive media.

If there is dirty or aggressive media in the system, or if this is to be expected, the device must be modified in terms of those parts that come into contact with the media. The device is to be exclusively used for the applications agreed between the manufacturer and the user.

1.3 Function diagram

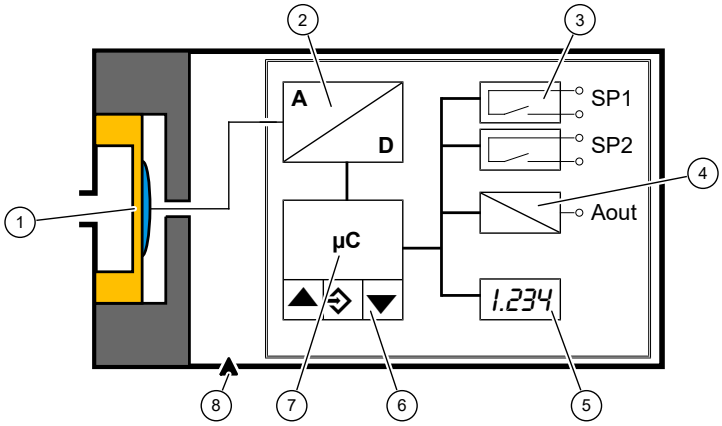

Fig. 1: Function diagram

1	Sensor	2	Signal converter
3	Switching outputs	4	Analogue output
5	Measured value display	6	Keyboard
7	Microcontroller	8	Pressure equalisation

1.4 Design and mode of operation

Depending on the measuring range, the ME50 is produced with a ceramic or a piezo-resistive measuring cell. Two switch outputs are also possible in the version with a 3-conductor connection.

Ceramic measuring cell

In the ceramic measuring cell, the pressure acts directly on the ceramic membrane which in turn deforms. The membrane is constructed electrically like a plate capacitor whose capacity change is proportional to the effective pressure. The electronics that are controlled by a micro-controller implement this change in capacitance into an standard electrical signal.

Piezo-resistive measuring cell

In the piezo-resistive measuring cell, the pressure is applied to a silicon membrane into which the deformation-dependent resistances have been diffused. The material resistance changes proportionally to the effective pressure. The electronics that are controlled by a micro-controller implement this change in resistance into an standard electrical signal.

2 Technical Data

2.1 Generalities

Reference conditions (acc. to IEC 61298-1)		
Temperature error	+15 … +25 °C	
Relative humidity	45 … 75 %	
Air pressure	86 … 106 kPa	860 … 1060 mbar
Installation position	User-defined	

2.2 Input variables

Ceramic measuring cell

Measuring range	Smallest measuring span	Over-pressure safety
[mbar]	[mbar]	[bar]
-20 … +20	10	4
-40 ... +40	20	
-100 … +100	40	
0 … 60	12	4
0 … 100	20	
0 … 200	40	

Piezo-resistive measuring cell

Measuring range	Smallest measuring span	Over-pressure safety
[mbar]	[mbar]	[bar]
0 … 400	80	1
0 … 600	120	3

[bar]	[bar]	[bar]
0 … 1	0.2	3
0 … 1.6	0.32	7.5
0 … 2.5	0.5	7.5
0 … 4	0.8	15
0 … 6	1.2	15
0 … 10	2	30
0 … 16	3.2	90
-0.6 … 0	0.12	3.0
-1 … 0	0.2	3.0
-1 … +0.6	0.32	3.0
-1 … +1.5	0.5	7.5
-1 … +3	0.8	15
-1 … +5	1.2	15
-1 … +9	2.0	30
-1 … +15	3.2	90

The measuring cell can be set within the pre-defined measuring range, which is also stated on the type plate, using the parameters EMF and ML . The smallest settable measuring span is listed for every measuring range and is a minimum of 1:5 in relation to the basic measuring range.

2.3 Output parameters

The ME50 versions differ in the number and type of outputs available (see order code):

Analog output	**0/4 … 20 mA**
Load	$R_L \leq ((U_b – 10\ V) * 50\ \Omega) + 300\ \Omega$
Current limitation	approx. 26 mA

Switching output			
0 ... 2 Photo MOS relay not short-circuit proof, thermally protected			
Contact	U_{max}	I_{max}	R_{ON}
potential-free (AC/DC)	30 V	200 mA	< 1 Ω
PNP/NPN switching (DC)	U_b	200 mA	< 1 Ω

2.4 Measurement accuracy

Accuracy	± 0.2% of measuring range (FS)*)
Temperature drift	± 0.01% FS/K
Zero point Measuring range	Temperature error band over the compensated temperature range
Compensated measuring range	-10 °C … +70 °C
Long-term stability	< ±0.1 % FS/year

*) Includes non-linearity, hysteresis, non-repeatability, zero and full scale deviation. Calibrated in vertical mounting position with process connection downwards.

2.5 Auxiliary energy

Rated voltage	24V DC
Perm. operating voltage	12 … 30 V DC
Power consumption	< 1 W

2.6 Application conditions

Ambient temperature range	without display	-20 °C … +80 °C
	with display	-20 °C … +80 °C
Storage temperature range		-40 °C … +90C
Medium temperature range (in operation)		-10 °C … +85 °C
EMC		EN 61326-1:2013 EN 61326-2-3:2013
RoHS		EN IEC 63000:2018
Protection class		IP 65 according to EN 60529

Materials of the parts in contact with the environment		
Housing		CrNi steel 1.4404, 1.4571
Process adapter TC Clamp	light/solid	CrNi steel 1.4404
	High pressure	CrNi steel 1.4308
TC Clamp		CrNi steel 1.4301
Front pane		Safety composite glass
M12 plug		Nickel-plated brass, PA, FKM, brass

Materials of the parts in contact with the measured medium		
Process adapter TC Clamp	light/solid	CrNi steel 1.4404
	High pressure	CrNi steel 1.4308
TC Seal		FKM (Viton®)
Sensor membrane	Ceramics	Aluminium oxide ceramics Al_2O_3 (99.9 %)
	Piezoresistiv	CrNi 1.4435

2.7 Construction design.

All dimensions in mm unless otherwise stated

2.7.1 Dimensional picture

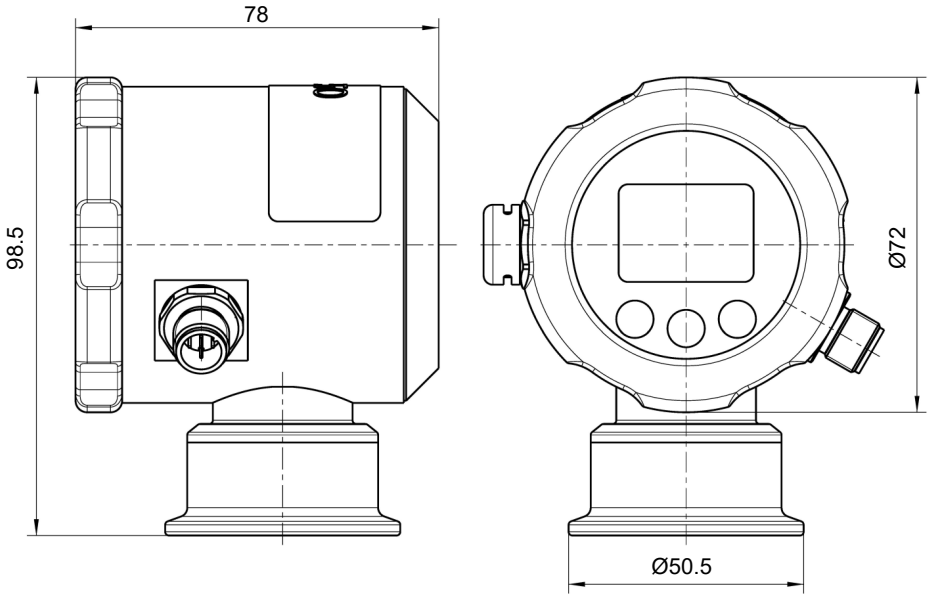

Fig. 2: Dimension drawing

2.7.2 Process connection

The process connection uses a Tri-Clamp connection acc. to DIN 32676. A G½ inch process adapter with a TC flange can be delivered fro this connection.

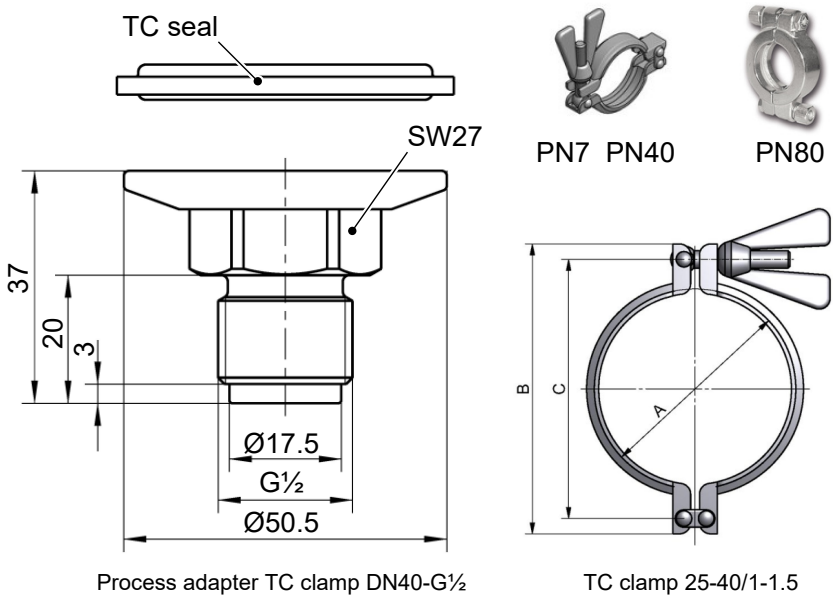

Fig. 3: Dimension drawing process parameters

Planned measures	Operating pressure	A	B	C
TC clamp DN40 light	PN7	53.0	84.5	69.0
TC clamp DN40 solid	PN40	53.0	90.0	57.0
TC clamp DN40 high pressure	PN80	53.5	102	---

Table 1: TC clamp

2.7.3 Electrical connection

3-conductor version

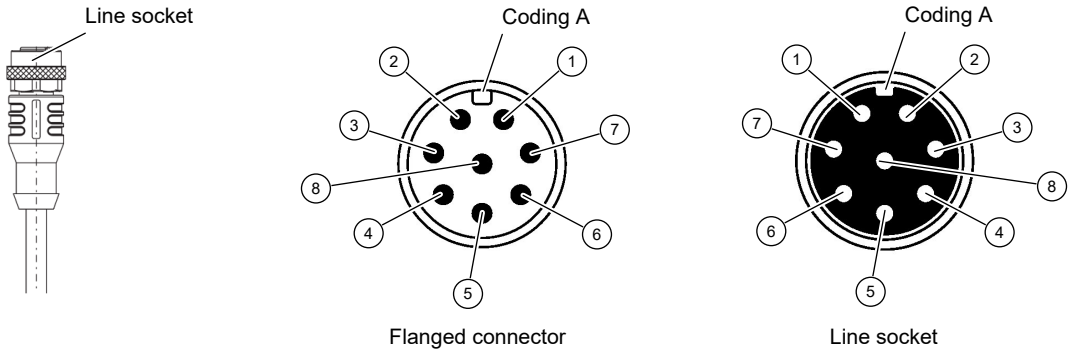

Fig. 4: M12 plug DIN EN 61076-2-101

Without switch output

Pin	Signal name			Cable colour
1	Outlet		+Sig	white
2	Supply		$+U_b$	brown
3	unused		nc	green
4	unused		nc	yellow
5	unused		nc	grey
6	unused		nc	pink
7	Supply		$-U_b$	blue
8	Functional earth	⏚	FE	red
A	Coding A			

Table 2: Supply, and output signal

With switch output

There are three options available for the semiconductor switch contacts K1 and K2.

Potential-free contacts

Pin	Signal name			Cable colour
1	Output		+Sig	white
2	Operating voltage		$+U_b$	brown
3	Switching output 1	⊐	K1 (a)	green
4	Switching output 1		K1 (b)	yellow
5	Switching output 2	⊐	K2 (b)	grey
6	Switching output 2		K2 (a)	pink
7	Operating voltage		$-U_b$	blue
8	Functional earth	⏚	FE	red
A	Coding A			

Table 3: Power supply, output signal and switching contacts

PNP-switching

Pin	Signal name			Cable colour
1	Output		+Sig	white
2	Operating voltage		$+U_b$	brown
3	Switching output 1		PNP1	green
4	---		n.c.	yellow
5	Switching output 2		PNP2	grey
6	---		n.c.	pink
7	Operating voltage		$-U_b$	blue
8	Functional earth		FE	red
A	Coding A			

Table 4: Power supply, output signal and PNP switching contacts

NPN-switching

Pin	Signal name			Cable colour
1	Output		+Sig	white
2	Operating voltage		$+U_b$	brown
3	Switching output 1		NPN1	green
4	---		n.c.	yellow
5	Switching output 2		NPN2	grey
6	---		n.c.	pink
7	Operating voltage		$-U_b$	blue
8	Functional earth		FE	red
A	Coding A			

Table 5: Power supply, output signal and NPN switching contacts

2.8 Parameters

The device can be configured on site using the membrane keyboard. The housing must be opened for this purpose.

Characteristic curve inversion	Increasing; decreasing
Attenuation	0 … 200 s
adjustable signal limits	
• upper current limit	3.5 … 22.5 mA
• lower current limit	3.5 … 22.5 mA
• Error signal	3.5 … 22.5 mA
Turn down	1:5

Table 6: Parameters

3 Order Codes

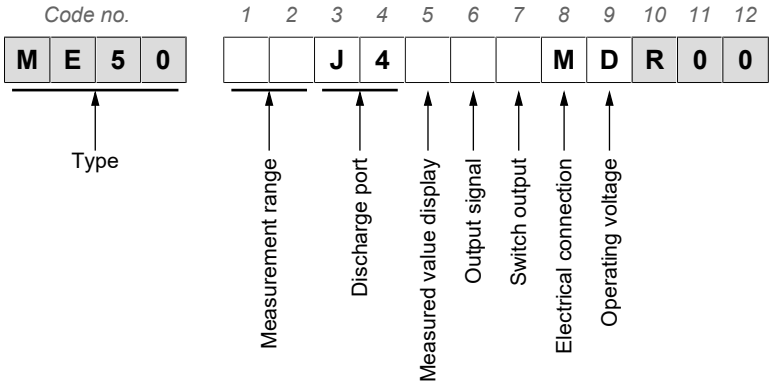

[1.2]	Measurement range	Measuring cell
C7	-20 … +20 mbar	Ceramic measuring cell
C5	-40 … +40 mbar	
B4	-100 … +100 mbar	
58	0 … 60 mbar	
59	0 … 100 mbar	
44	0 … 200 mbar	
83	0 … 400 mbar	Piezo-resistive measuring cell
C1	0 … 600 mbar	
02	0…1 bar	
03	0…1.6 bar	
04	0…2.5 bar	
05	0…4 bar	
06	0…6 bar	
07	0…10 bar	
08	0…16 bar	
30	-0.6…0 bar	
31	-1…0 bar	
32	-1…0.6 bar	
33	-1…1.5 bar	
34	-1 ... 3 bar	
35	-1…5 bar	
36	-1…9 bar	
37	-1…15 bar	

[3.4]	Discharge port
J4	Tri Clamp flange connection DN40 DIN 32676 / ISO 2852

[5]	Measured value display
A	without display
B	3 ½ digit LC display

[6]	Output signal
A	0 … 20 mA
P	4 … 20 mA

[7]	Switch output	Electrical connection
M	without switch output	
N	2 potential-free semiconductor switches	AC/DC
8	2 semiconductor switches PNP-switching	DC
9	2 semiconductor switches NPN-switching	DC

[8]	Electrical connection
M	M12 plug connection

[9]	Operating voltage
D	24 V DC

3.1 Accessories

Order no.	Planned measures		
06411173	Process adapter TC clamp DN40-G½ outer (incl. seal)		
04001208	TC clamp light PN7 DN25-40/1-1.5		
04001209	TC clamp solid PN40 DN25-40/1-1.5		
04001210	TC clamp high pressure PN80 DN25-40/1-1.5		
09001844	Connection cable with M12 coupling	8-pin	2 m
06401995	Connection cable with M12 coupling	5-pin	2 m

3.2 Information about the document

This document contains all technical data about the device. Great care was taken when compiling the texts and illustrations. nevertheless, errors cannot be ruled out.

Subject to technical amendments.

FISCHER Mess- und Regeltechnik GmbH
Bielefelder Str. 37a
D-32107 Bad Salzuflen

Tel. +49 5222 974-0
Fax +49 5222 7170
www.fischermesstechnik.de
info@fischermesstechnik.de

Technische Änderungen vorbehalten. Subject to technical changes. Sous réserve de modifications techniques.