EagleBurgmann
a member of EKK and FREUDENBERG

RELY ON EXCELLENCE

eMG1

Mechanical seals | Mechanical seals for pumps | Elastomer bellows seals

Features
- For plain shafts
- Single and dual seal
- Elastomer bellows rotating
- Balanced
- Independent of direction of rotation

Advantages
- **100 % compatible with MG1**
- Small outer diameter of bellows support ($d_b$min) enables direct retaining ring support, or smaller spacer rings
- Optimal alignment characteristic through self-cleaning of disk/shaft
- Improved centering across entire pressure operating range
- No torsion on bellows
- Shaft protection over entire seal length
- Protection of seal face during installation due to special bellows design
- Insensitive to shaft deflections due to large axial movement ability
- Suitable for low-end sterile applications

Operating range
Shaft diameter:
d1 = 14 ... 110 mm (0.55" ... 4.33")
Pressure: p1 = 18 bar (261 PSI),
vacuum ... 0.5 bar (7.25 PSI),
up to 1 bar (14.5 PSI) with seat locking
Temperature: t = -20 °C ... +140 °C
(-4 °F ... +284 °F)
Sliding velocity: vg = 10 m/s (33 ft/s)
Admissible axial movement: ±2.0 mm (±0.08")

Materials
Seal face: Carbon graphite antimony impregnated (A), Carbon graphite resin impregnated (B), Silicon carbide (eSiC-Q7)
Seat: Silicon carbide (eSic-Q7, Q1)
Elastomer: NBR (P), EPDM (E), FKM (V), HNBR (X4)
Metal parts: CrNiMo steel (G), Hastelloy® (M)

Standards and approvals
Various material approvals available (depending on type and material combinations).
Please inquire!
- FDA
- UBA (KTW)
- ACS
- W270

Notes
The eMG1 can also be used as a multiple seal in tandem or in a back-to-back arrangement, please inquire. Other materials and designs available on request.

Recommended applications
- Fresh water supply
- Building services engineering
- Waste water technology
- Food and beverage industry
- Sugar production
- Pulp and paper industry
- Oil industry
- Petrochemical industry
- Chemical industry
- Water, waste water, slurries (solids up to 5 % by weight)
- Pulp (up to 4 % otro)
- Latex
- Dairies, beverages

eagleburgmann.com
info@eagleburgmann.com

All technical specifications are based on extensive tests and our many years of experience. The diversity of possible applications, however, means that they can serve only as guide values.
We must be notified of the exact conditions of application before we can provide any guarantee for a specific case. This is subject to change.

- Sulfide slurries
- Chemicals
- Oils
- Chemical standard pumps
- Helical screw pumps
- Stock pumps
- Circulating pumps
- Submersible pumps
- Water and waste water pumps

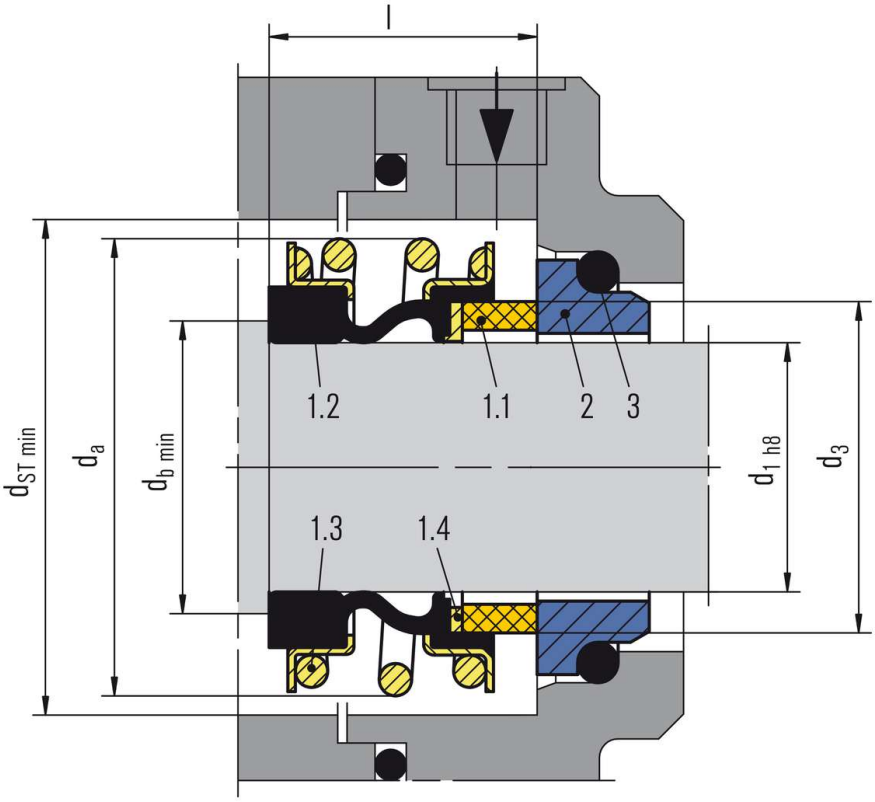

eMG1

Item	Description
1.1	Seal face
1.2	Bellows
1.3	Set of springs
1.4	PEEK-PTFE disk
2	Seat (G6)
3	O-Ring or cup rubber

All technical specifications are based on extensive tests and our many years of experience. The diversity of possible applications, however, means that they can serve only as guide values.
We must be notified of the exact conditions of application before we can provide any guarantee for a specific case. This is subject to change.

26.05.2026 © EagleBurgmann

Seat alternatives

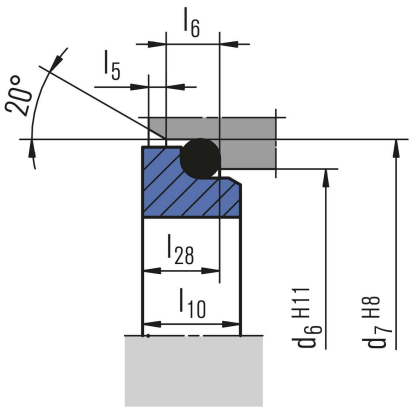

G6
EN 12756

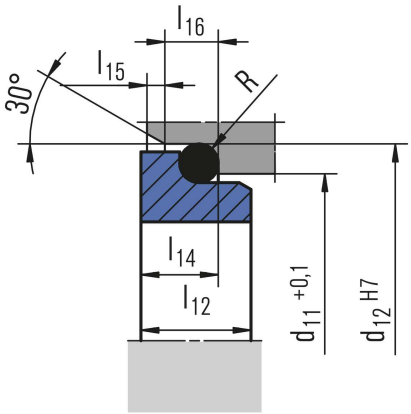

G4 (optional)

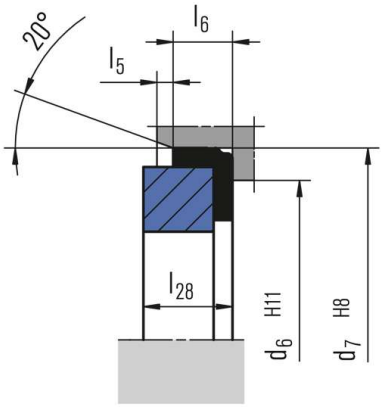

G60 (optional)
EN 12756

All technical specifications are based on extensive tests and our many years of experience. The diversity of possible applications, however, means that they can serve only as guide values.
We must be notified of the exact conditions of application before we can provide any guarantee for a specific case. This is subject to change.

26.05.2026 © EagleBurgmann

Product variants

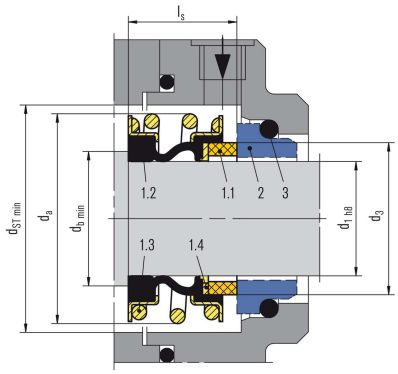

eMG
Dimensions, items and designations same as for eMG1, but with an shortened bellows tail to achieve the fitting length l_S. Shortest fitting length.

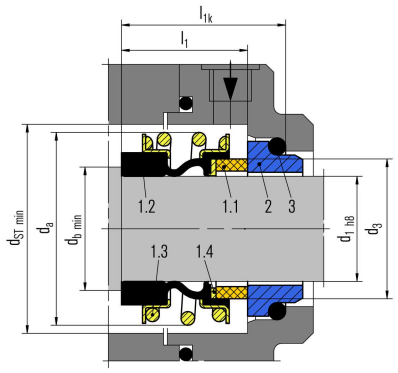

eMG12
Dimensions, items and designations same as for eMG1, but with an extended bellows tail to achieve the fitting length l_{1k} according to EN 12756 in combination with seat G6 or G60 (d_a exceeds EN 12756).

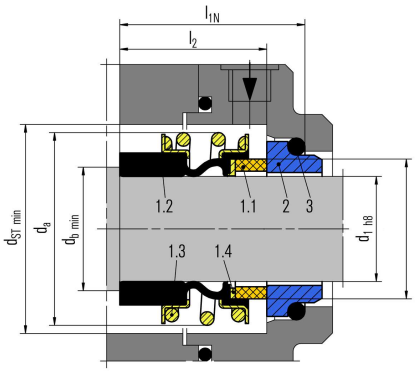

eMG13
Dimensions, items and designations same as for eMG1, but with an extended bellows tail to achieve the fitting length l_{1N} according to EN 12756 in combination with seat G6 or G60 (d_a exceeds EN 12756).

All technical specifications are based on extensive tests and our many years of experience. The diversity of possible applications, however, means that they can serve only as guide values.
We must be notified of the exact conditions of application before we can provide any guarantee for a specific case. This is subject to change.

eRMG1
Identical to eMG1, but with a special bellows surface on the shaft side. For use in hot water pumps

d1 = 14 ... 38 mm (0.55" ... 1.50")
Seat G6: Silicon carbide (eSiC-Q7)

A/eSIC-Q7:
120 °C (248 °F) and 25 bar (363 PSI) 140 °C (284 °F) and 16 bar (232 PSI)

B/eSIC-Q7:
120 °C (248 °F) and 18 bar (161 PSI)

eSIC-Q7/eSIC-Q7:
120 °C (248 °F) and 18 bar (161 PSI)

All technical specifications are based on extensive tests and our many years of experience. The diversity of possible applications, however, means that they can serve only as guide values.
We must be notified of the exact conditions of application before we can provide any guarantee for a specific case. This is subject to change.

26.05.2026 © EagleBurgmann

Dimensions

d_1	d_3	d_6	d_7	d_{11}	d_{12}	d_a	d_b*)	d_{ST}	l_S	l	l_1	l_{1k}	l_2	l_{1N}	l_5	l_6	l_{10}	l_{12}	l_{14}	l_{15}	l_{16}	l_{28}	R
14	19.7	21	25	20.5	24.6	27	17.5	28.5	15	17	28.4	35	-	-	1.5	4	7.5	6.5	5.6	1.2	3.8	6.6	1.2
15	20.8	-	-	20.5	24.6	28.5	18.5	30	15	17	-	-	-	-	-	-	-	7.5	6.6	1.2	3.8	-	1.2
16	21	23	27	22	28	28.5	19.5	30	15	17	28.4	35	33.4	40	1.5	4	7.5	8.5	7.5	1.5	5	6.6	1.5
18	23.7	27	33	24	30	32	21.5	33	17	19.5	30	37.5	-	-	2	5	8.5	9	8	1.5	5	7.5	1.5
20	26.7	29	35	29.5	35	37	24	38	19	21.5	30	37.5	-	-	2	5	8.5	8.5	7.5	1.5	5	7.5	1.5
22	27.7	31	37	29.5	35	37	26	38	19	21.5	30	37.5	37.5	45	2	5	8.5	8.5	7.5	1.5	5	7.5	1.5
24	31.2	33	39	32	38	42.5	28	44	19	22.5	32.5	40	-	-	2	5	8.5	8.5	7.5	1.5	5	7.5	1.5
25	31.2	34	40	32	38	42.5	29	44	19	23	32.5	40	-	-	2	5	8.5	8.5	7.5	1.5	5	7.5	1.5
28	35	37	43	36	42	49	32	50	23	26.5	35	42.5	42.5	50	2	5	8.5	10	9	1.5	5	7.5	1.5
30	37	39	45	39.2	45	49	34	50	23	26.5	35	42.5	-	-	2	5	8.5	11.5	10.5	1.5	5	7.5	1.5
32	40.2	42	48	42.2	48	53.5	36	55	23.5	27.5	35	42.5	-	-	2	5	8.5	11.5	10.5	1.5	5	7.5	1.5
33	40.2	42	48	44.2	50	53.5	37	55	23.5	27.5	35	42.5	-	-	2	5	8.5	12	11	1.5	5	7.5	1.5
35	43.2	44	50	46.2	52	57	40	59	24.5	28.5	35	42.5	-	-	2	5	8.5	12	11	1.5	5	7.5	1.5
38	46.2	49	56	49.2	55	59	43	61	25	30	36	45	46	55	2	6	10	11.3	10.3	1.5	5	9	1.5
40	48.8	51	58	52.2	58	62	45	64	25.5	30	36	45	-	-	2	6	10	11.8	10.8	1.5	5	9	1.5
43	51.8	54	61	53.3	62	65.5	48	67	25.5	30	36	45	-	-	2	6	10	13.2	12	2	6	9	2.5
45	53.8	56	63	55.3	64	68	50	70	25.5	30	36	45	-	-	2	6	10	12.8	11.6	2	6	9	2.5
48	56.8	59	66	59.7	68.4	70.5	53	74	26	30.5	36	45	51	60	2	6	10	12.8	11.6	2	6	9	2.5
50	58.8	62	70	60.8	69.3	74	55	77	26	30.5	38	47.5	-	-	2.5	6	10.5	12.8	11.6	2	6	9.5	2.5
53	62.2	65	73	63.8	72.3	78.5	58	81	29	33	36.5	47.5	-	-	2.5	6	12	13.5	12.3	2	6	11	2.5
55	64.2	67	75	66.5	75.4	81	60	83	30	35	36.5	47.5	59	70	2.5	6	12	14.5	13.3	2	6	11	2.5
58	67.2	70	78	69.5	78.4	85.5	64	88	31	37	-	-	-	-	2.5	6	12	14.5	13.3	2	6	11	2.5
60	70	72	80	71.5	80.4	88.5	66	91	32	38	41.5	52.5	59	70	2.5	6	12	14.5	13.3	2	6	11	2.5
65	75	77	85	76.5	85.4	93.5	71	96	34	40	41.5	52.5	-	-	2.5	6	12	14.2	13	2	6	11	2.5
68	78	81	90	82.7	91.5	96.5	74	100	34	40	-	-	-	-	2.5	7	12.5	14.9	13.7	2	6	11.3	2.5
70	80	83	92	83	92	99.5	76	103	34	40	48.7	60	-	-	2.5	7	12.5	14.2	13	2	6	11.3	2.5
75	85.5	88	97	90.2	99	107	81	110	34	40	48.7	60	-	-	2.5	7	12.5	15.2	14	2	6	11.3	2.5
80	90.5	95	105	95.2	104	112	86	116	34	40	48	60	-	-	3	7	13	16.2	15	2	6	12	2.5
85	96	100	110	100.2	109	120	92	124	35	41	46	60	-	-	3	7	15	16	14.8	2	6	14	2.5
90	102	105	115	105.2	114	127	97	131	38	45	51	65	-	-	3	7	15	16	14.8	2	6	14	2.5
95	107	110	120	111.6	120.3	132	102	136	39	46	51	65	-	-	3	7	15	17	15.8	2	6	14	2.5
100	112	115	125	114.5	123.3	137	107	140	40	47	51	65	-	-	3	7	15	17	15.8	2	6	14	2.5
110	123	-	-	-	-	150	118	154	43	49	-	-	-	-	-	-	-	-	-	-	-	-	-

All technical specifications are based on extensive tests and our many years of experience. The diversity of possible applications, however, means that they can serve only as guide values.
We must be notified of the exact conditions of application before we can provide any guarantee for a specific case. This is subject to change.

26.05.2026 © EagleBurgmann