Chemical Pump / Standardised Chemical Pump

MegaCPK

Type Series Booklet

Legal information/Copyright

Type Series Booklet MegaCPK

All rights reserved. The contents provided herein must neither be distributed, copied, reproduced, edited or processed for any other purpose, nor otherwise transmitted, published or made available to a third party without the manufacturer's express written consent.

Subject to technical modification without prior notice.

© KSB SE & Co. KGaA, Frankenthal 2024-07-08

Contents

Centrifugal Pumps with Shaft Seal **4**
Standardised Chemical Pumps 4
MegaCPK 4
Main applications 4
Operating data 4
Design details 4
Designation 6
Bearing life 8
Materials 9
Coating and preservation 10
Product benefits 10
Acceptance tests and warranty 11
Pressure limits and temperature limits 11
Technical data 13
Dimensions and connections 15
Flange design 22
Scope of supply 22
General assembly drawing with list of components 23

Centrifugal Pumps with Shaft Seal

Standardised Chemical Pumps

MegaCPK

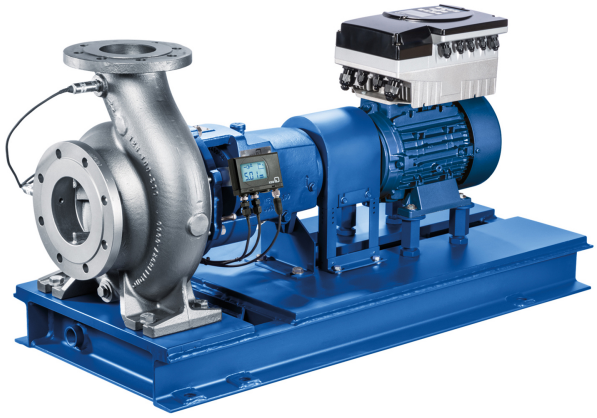

The product illustrated as an example may include options incurring a surcharge.

Main applications

- Chemical industry (aggressive / other liquids)
- Petrochemical industry (aggressive / other liquids)
- Process engineering
- Refinery
- Biodiesel, bioethanol applications
- Renewable energy
- Fossil-fuelled power stations
- Seawater desalination/reverse osmosis
- Paper industry / pulp industry
- General industry
- Steel industry
- Alcohol industry
- Food industry / beverage industry
- Sugar industry

Operating data

Table 1: Operating properties

Characteristic		Value	
		50 Hz	60 Hz
Flow rate	Q [m³/h]	≤ 3300	≤ 2700
Head	H [m]	≤ 162	≤ 233
Fluid temperature	$T_{min.}$ [°C]	≥ -40	
	$T_{max.}$ [°C]	≤ +400	
Operating pressure	p [bar]	≤ 40	

Design details

Design

- Volute casing pump
- Horizontal installation
- Back pull-out design
- Single-stage
- Technical requirements to ISO 5199
- Dimensions and ratings to ISO 2858 complemented by pumps of nominal sizes DN 25, DN 200 and above

Pump casing

- Single or double volute, depending on the pump size
- Radially split volute casing
- Volute casing with integrally cast pump feet
- Replaceable casing wear rings (as standard for casing materials G/S, optional for other materials)

Shaft seal

- Gland packing
- Single mechanical seal / double mechanical seal
- Cartridge seal
- Shaft equipped with replaceable shaft protecting sleeve in the shaft seal area

Alternative:

- Version without shaft protecting sleeve with "wet shaft" (in Europe and Northern Asia only)

Impeller type

- Closed radial impeller with multiply curved vanes

2731.5/12-EN

Bearings:

- Medium Duty
  - Radial bearing: cylindrical roller bearing
  - Fixed bearing: paired angular contact ball bearing / double-row angular contact ball bearing
- Economy
  - Floating bearings: deep groove ball bearings

Lubrication:

- Oil lubrication
- Grease lubrication

Bearing bracket designation

Example: CS50E

Table 2: Bearing bracket designation

Code	Description
CS	Bearing bracket
50	Size code (based on dimensions of seal chamber and shaft end)
E	Bearing design

Code	Description	
E	E	= Economy
	-[1]	= Medium-duty

Bearing assemblies used

Table 3: Standard bearing assembly

Version			Bearing bracket	Rolling element bearing	
Medium Duty (Oil and grease lubrication)	Economy (Oil lubrication)	Economy (Grease lubrication)		Pump end	Drive end
✗			CS40	NU208-E	3208
✗			CS50	NU310-E	2 x 7310[2]
✗			CS60	NU312-E	2 x 7312[2]
✗			CS80/CA80	NU216-E	2 x 7216[2]
✗			CA85	NU317-E	2 x 7317[2]
✗			CA120	NU324-E	2 x 7324[2]
	✗		CS40E	6208 C3	6208 C3
	✗		CS50E	6310 C3	6310 C3
	✗		CS60E	6312 C3	6312 C3
	✗		CS80E	6216 C3	6216 C3
	✗		CA80E	6313 C3	6313 C3
	✗		CA85E	6317 C3	6317 C3
		✗	CS40E	6208-2Z C3	6208-2Z C3
		✗	CS50E	6310-2Z C3	6310-2Z C3
		✗	CS60E	6312-2Z C3	6312-2Z C3
		✗	CS80E	6216-2Z C3	6216-2Z C3
		✗	CA80E	6313-2Z C3	6313-2Z C3
		✗	CA85E	6317-2Z C3	6317-2Z C3

Automation

Automation options:

- PumpDrive
- PumpMeter
- KSB Guard

2731.5/12-EN

1 Blank
2 FAG designation: B-TVP-UA, SKF designation: BECBP

Designation

Table 4: Designation example

Position																																			
1	2	3	4	5	6	7	8	9	10	11	12	13	14	15	16	17	18	19	20	21	22	23	24	25	26	27	28	29	30	31	32	33	34	35	36
M	C	P	K	0	5	0	-	0	3	2	-	1	2	5	1	C	D	H	I	X	N	C	E	D	1	3	2	0	6	A	P	D	2	E	M
See name plate and data sheet																						See data sheet													

Table 5: Designation key

Position	Code	Description	
1-4	Pump type		
	MCPK	MegaCPK	
5-16	Size		
	050	Nominal suction nozzle diameter [mm]	
	032	Nominal discharge nozzle diameter [mm]	
	125	Nominal impeller diameter [mm]	
	1	Impeller type	
17	Pump casing material		
	C	Stainless steel	1.4408 / A743CF8M
	D	Duplex stainless steel	1.4593 / 1.4517 / A995 Gr. 1B
	E	Unalloyed steel	GP240GH + N / A216 Gr. WCB
	F	Stainless steel	1.4308 / A743 Gr. CF8
	G	Cast iron	EN-GJL-250 / A48 Cl. 35B
	O	Super duplex steel	Noriclor / 1.4573 / 1.4469.09 / ASTM 995 Gr. 5A
	S	Nodular cast iron	JS1030 / A536 60-40-18
	V	Stainless steel	1.4408 / A743CF8M
18	Impeller material		
	B	Bronze	CC480K-GS / -DW / B30 C90700
	C	Stainless steel	1.4408 / A743CF8M
	D	Duplex stainless steel	1.4593 / 1.4517 / A995 Gr. 1B
	E	Unalloyed steel	GP240GH+N / A216 Gr. WCB
	F	Stainless steel	1.4308 / A743 Gr. CF8
	G	Cast iron	EN-GJL-250 / A48 Cl. 35B
	O	Super duplex steel	Noriclor / 1.4573 / 1.4469.09 / ASTM 995 Gr. 5A
	S	Nodular cast iron	JS 1030 / A536 60-40-18
	X	Special material	JS1025 / JS1030 / A536 60-40-18
19	Heatable version and/or orifice plate		
	-[3]	Standard	
	D	Orifice plate	
	H	Heatable casing and heatable casing cover (welded heating chamber)	
	K	Heatable or coolable casing cover (bolted heating chamber / cooling chamber)	
	M	Heatable casing and heatable casing cover (bolted heating chamber)	
	N	Orifice plate and heatable casing and heatable casing cover (bolted heating chamber / cooling chamber)	
	P	Orifice plate and heatable or coolable casing cover (bolted heating chamber / cooling chamber)	
	Z	Orifice plate and heatable casing and heatable casing cover (welded heating chamber)	
20	Hydraulic system		
	-[3]	Standard	
	E	Extended-flow hydraulic system	
	I	With auxiliary impeller	
	L	Standard-flow hydraulic system	
21	Design		
	S	KSB standard	

[3] Blank

2731.5/12-EN

Position	Code	Description
21	C	Extended standard
	X	Special design
22	Bearing bracket	
	C	Normal, coolable (Medium Duty)
	E	EC1935/2004 or FDA
	M	Oil lubrication (Medium Duty)
	N	Oil lubrication (Economy)
	O	Grease lubrication (Economy)
	P	Grease lubrication (Medium Duty)
23-25	Seal options	
	A	A-type casing cover (conical casing cover)
	AD	A-type casing cover with throttling bush as quench seal
	AQ	A-type casing cover with lip seal as quench seal
	B	Dead-end
	BD	Dead-end, with throttling bush as quench seal
	BQ	Dead-end, with lip seal as quench seal
	CA	Cartridge seal (A-type casing cover)
	CB	Double cartridge seal, supplied with barrier fluid pressure
	CBA	Double cartridge seal, supplied with barrier fluid pressure (A-type casing cover)
	CDA	Cartridge seal with throttling bush as quench seal (A-type casing cover)
	CE	Cartridge seal with external circulation
	CED	Cartridge seal with external circulation and throttling bush as quench seal
	CEQ	Cartridge seal with external circulation and lip seal as quench seal
	CI	Cartridge seal with internal circulation
	CID	Cartridge seal with internal circulation and throttling bush as quench seal
	CIQ	Cartridge seal with internal circulation and lip seal as quench seal
	CQA	Cartridge seal with lip seal as quench seal (A-type casing cover)
	CT	Double cartridge seal with unpressurised quench fluid
	CTA	Double cartridge seal with unpressurised quench fluid (A-type casing cover)
	DB	Double mechanical seal in back-to-back arrangement
	DR	Double mechanical seal in back-to-back arrangement with pumping screw
	E	External circulation
	EB	Internal circulation with heatable seal cover and throttling bush as quench seal
	ED	External circulation with throttling bush as quench seal
	EQ	External circulation with lip seal as quench seal
	ES	Internal circulation with heatable seal cover
	F	External flushing
	FD	External flushing with throttling bush as quench seal
	FQ	External flushing with lip seal as quench seal
	I	Internal circulation
	ID	Internal circulation with throttling bush as quench seal
	IDH	Internal circulation with heatable casing cover and throttling bush as quench seal
	IH	Internal circulation with heatable casing cover
	IQ	Internal circulation with lip seal as quench seal
	IQH	Internal circulation with heatable casing cover and lip seal as quench seal
	P1	Gland packing variant with internal barrier fluid (Na)
	P2	Gland packing variant without barrier fluid (Nb)
	P3	Gland packing variant with external barrier fluid (Nc)
	TM	Mechanical seals in tandem arrangement, with barrier fluid and jacket cooling
	TR	Mechanical seals in tandem arrangement, outboard seal with pumping screw
	TS	Mechanical seals in tandem arrangement, supplied with barrier fluid pressure
26-29	Motor rating P_N [kW]	
	0007	0,75
	...	...

Position	Code	Description
26-29	1320	132
30	Number of motor poles	
31	Product generation	
	A	MegaCPK (bearing bracket CS)
	B	MegaCPK (bearing bracket CA)
32-35	PumpDrive	
	PDA	With PumpDrive 1st generation, Advanced
	PDB	With PumpDrive 1st generation, Basic
	PDS	With PumpDrive 1st generation, Advanced, with KSB SuPremE motor
	PD2	With PumpDrive 2nd generation
	PD2E	With PumpDrive 2nd generation, Eco
36	PumpMeter	
	M	With PumpMeter

Bearing life

The minimum calculated bearing life equals:

- 17,500 hours for Economy bearings
- 25,000 hours for Medium Duty bearings or 40,000 hours for operation in the range of 0.7-1.1 Q/Q_{opt} for CS bearing

2731.5/12-EN

Materials

Table 6: Overview of available materials (Europe)

Description	Material variant														
	GG[4]	GC[4]	GD[4]	SG[5]	SC[5]	SD[5]	EG	EC	ED	CC	CD	VC	VD	DD	OO
Volute casing	CI			DI[6]			CS			SS		1.4408[7]		D	SD
Casing cover	CI			DI[6]			CS			SS		1.4408[7]		D	SD
Impeller	CI	SS	D	CI	SS	D	CI	SS	D	SS	D	SS	D	D	SD
Shaft	C45+N[8]														C45+N[9]
Bearing bracket	DI, CI[10]														
Support foot	St														
Seal cover	CrNiMoSt													DS	SDS
Casing wear ring	CI[11]			CI[11]			-[11][12]			-[13]		-[13]		-[14]	[15]
Impeller wear ring	-			-			-[16]	-	-[14]	-[13]	-[14]	-[13]	-[14]	-[14]	[15]
Shaft protecting sleeve (mechanical seal)	CrNiMoSt													DS	SDS
Shaft protecting sleeve (gland packing)	1.4122			1.4122			1.4122			CrNiMoSt		CrNiMoSt		DS	SDS
Impeller nut	CrNiMoSt													D	SDS

Table 7: Overview of available materials (Northern Asia)

Description	Material variant								
	GG[4]	GC[4]	GD[4]	EG	EC	ED	CC	CD	DD
Volute casing	CI			CS			SS		D
Casing cover	CI			CS			SS		D
Impeller	CI	SS	D	CI	SS	D	SS	D	D
Shaft	C45+N[8]								
Bearing bracket	DI								
Support foot	St								
Seal cover	CrNiMoSt								DS
Casing wear ring	CI[11]			-[11][12]			-[13]		-
Impeller wear ring	-			-[16]	-	-[14]	-[13]	-[14]	-[14]
Shaft protecting sleeve (mechanical seal)	CrNiMoSt								DS
Shaft protecting sleeve (gland packing)	1.4122			1.4122			CrNiMoSt		DS
Impeller nut	CrNiMoSt								D

4 Sizes 065-040-160.1, 065-040-200.1, 065-040-250.1, 080-050-160.1, 080-050-200.1, 080-050-250.1, 080-050-315.1 and 125-080-200.1 are not available in material variant G.
5 For sizes with bearing bracket CA only (complementary sizes)
6 EN-GJS-400-15
7 To VDMA 24276
8 T ≤ 10 °C: 1.4462, T > 250 °C: 1.7709. QT+SR, wet shaft: 1.4462
9 T ≤ 10 °C: 1.4462, T > 250 °C: 1.7709. QT+SR, wet shaft: 1.4501
10 For bearing brackets CA85 and CA120
11 Optional: VG434
12 Optional: CI
13 Optional: CrNiMo ST Int
14 Optional: DS
15 Optional: SD
16 Optional: 1.4027+QT

Table 8: Overview of available materials (Southern Asia)

Description	Material variant							
	GG	GB	GC	EE	EC	FF	CC	DD
Volute casing	CI	CI	CI	CS	CS	SS304	SS	D
Casing cover	CI	CI	CI	CS	CS	SS304	SS	D
Impeller	CI	B	SS	CS	SS	SS304	SS	D
Shaft	IS 5517 45C8		IS 5517 45C8[17]		IS 5517 45C8[18]			IS 5517 45C8
Bearing bracket	CI							
Support foot	St (S235JR)							
Seal cover	CrNiMoSt					CrNiSt	CrNiMoSt	DS
Casing wear ring	CI	IS318 Gr. L TB4	A743 Gr. CF8M	-[19]	-[20]	-	-[20]	-
Impeller wear ring	-	-	-	-[19]	-[20]	-	-[20]	-[14]
Shaft protecting sleeve (mechanical seal)	A276 TYPE 316					CrNiSt	A276 TYPE 316	DS
Shaft protecting sleeve (gland packing)	A276 TYPE 316		A276 TYPE 410 COND. H		A276 TYPE 316	CrNiSt	A276 TYPE 316	DS
Impeller nut	A743 Gr. CF8M					CrNiSt	A743 Gr. CF8M	D

Table 9: Overview of available materials (Americas)

Description	Material variant									
	GG	GC	CC	CX	EE	EC	BB	SS	SC	DD
Volute casing	CI		SS		CS		B	DI		D
Casing cover	CI		SS		CS		B	DI		D
Impeller	CI	SS	SS	CR	CS	SS	B	DI	SS	D
Shaft	A576 Gr. 1045[21]									DS
Bearing bracket	CI									
Support foot	St									
Seal cover	CrNiMoSt									DS
Casing wear ring	CI		-[22]		-[23]		B[22]	CI		-[14]
Shaft protecting sleeve (mechanical seal)	CrNiMoSt									DS
Shaft protecting sleeve (gland packing)	CI	CrNiMoSt								DS
Impeller nut	CrNiMoSt									D

Table 10: Codes used

Code	Material
B	IS318 Gr. LTB2 or CC480K-GS
CrNiSt	1.4308/ A743 Gr. CF-8
CrNiMoSt	1.4408/ 1.4404/ 1.4401/ 1.4571/ A743 Gr. CF-8M/ A276 TYPE 316/ A479 Gr. 316L
CI	EN-GJL-250/A48 Cl. 35B
CR	A743 CA6NM
CS	GP240GH+N/ A216GRWCB
D	1.4593/ 1.4517/ A995GR 1B
DI	EN-GJS-400-18-LT/ EN-GJS-400-15[5]
DS	1.4462 / UNS S31803
SS	1.4408 / A743 Gr. CF8M
SS304	1.4308 /A743 Gr. CF8
SD	Noriclor / 1.4573 / 1.4469.09 / ASTM 995 Gr. 5A / 1.4501

Coating and preservation

- Coating and preservation to KSB standard

Product benefits

- Hydraulic characteristics optimised for excellent efficiency and NPSH, ensuring energy-efficient and environmentally friendly use of resources
- Lower investment costs as duty points required can be achieved with smaller pump sizes
- Lower operating costs due to reduced energy consumption, optimised spare parts concept and hard-wearing, service-friendly design
- Flexible use due to modular design regarding hydraulic system materials, sealing elements, bearing brackets, coupling, baseplate and drive

17 Optional: A276 TYPE 410 COND. H
18 Optional: A276 TYPE 410 COND. H, A276 TYPE 316, 1.4462
19 Optional: casing wear ring in Chrome hard 400 in combination with impeller wear ring A743 Gr. CA15.09
20 Optional: casing wear ring A743 Gr. CF8M in combination with impeller wear ring A743 Gr. CF8M
21 Optional: 1.4021/ A276 TYPE 20 or A276 TYPE 316
22 Optional: SS
23 Optional: 1.4021/ AISI420

2731.5/12-EN

Acceptance tests and warranty

- Materials testing
  - Test report 2.2 on request
- Final inspection
  - Inspection certificate 3.1 to EN 10204 on request
- Hydraulic test

  The operating point of each pump is guaranteed to ISO 9906/3B.

  The following acceptance tests can be performed and certified at extra charge:
  - Performance test to ISO 9906
  - NPSH test
- Other inspections/tests on request
- Warranty

  Warranties are given within the scope of the valid terms and conditions of sale and delivery.

Pressure limits and temperature limits

Pressure limits and temperature limits of the pump

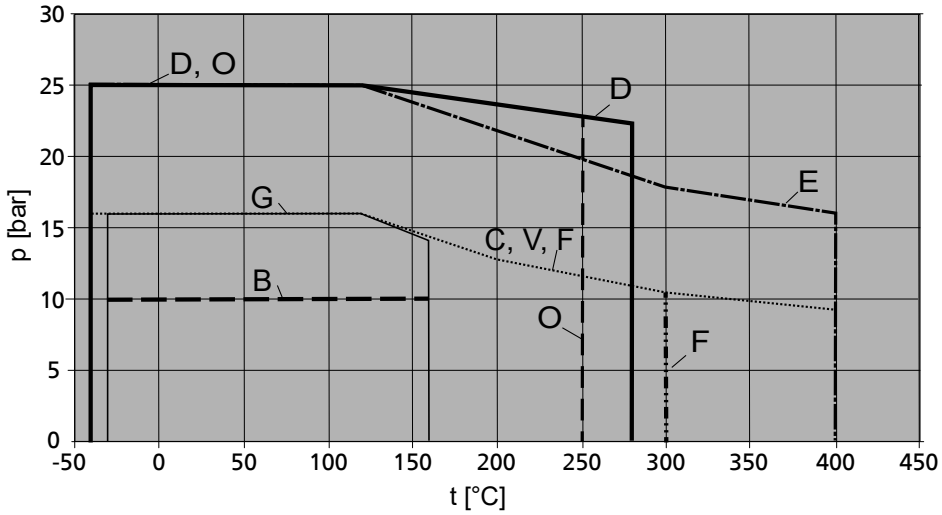

Fig. 1: Pressure limits and temperature limits of the pump with bearing bracket CS

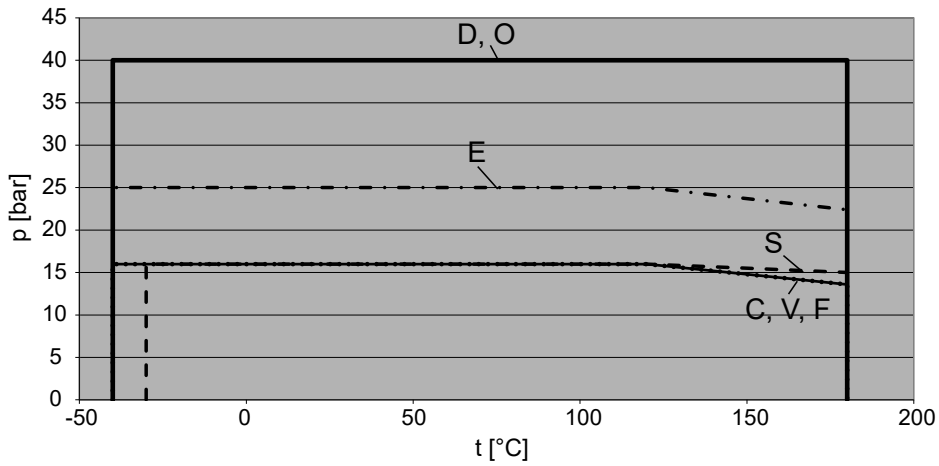

Fig. 2: Pressure limits and temperature limits of the pump for versions with bearing bracket CA (complementary sizes)

Pressure limits and temperature limits for heating chamber (heatable version)

Table 11: Pressure limits and temperature limits for heating chamber, heatable version

Version	Maximum temperature [°C]	Maximum pressure [bar]
Version with bolted casing cover	150	10
Version with welded casing cover[24)]	300	20

Pressure limits and temperature limits of shaft seals

The application limits of shaft seals depend on the circumferential speed, the material and the fluid handled. Verify the application limits in each individual case on the basis of manufacturers' catalogues, taking into account the actual operating conditions.

Pressure limits and temperature limits of ASME flanges

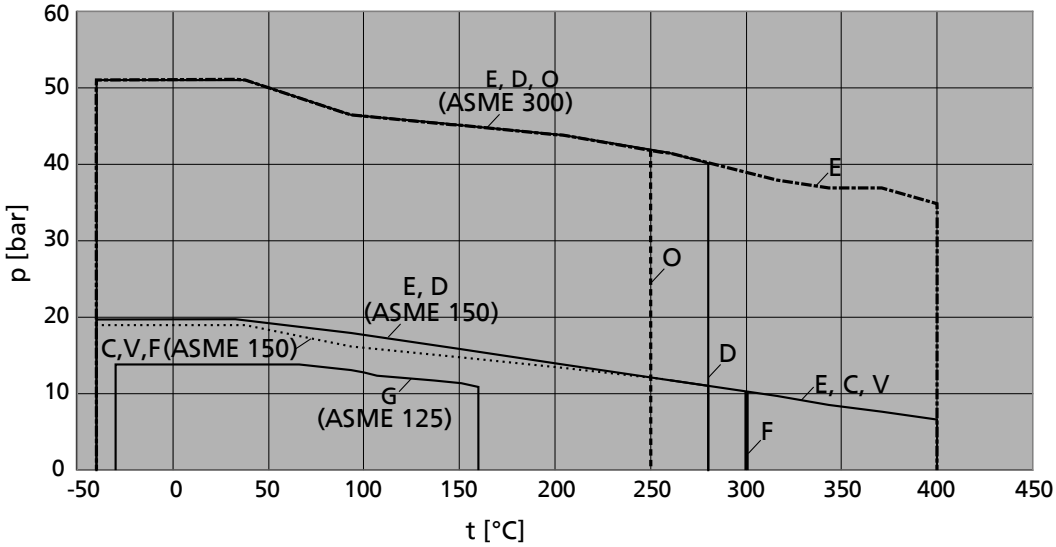

Fig. 3: Pressure limits and temperature limits of ASME flanges with bearing bracket CS

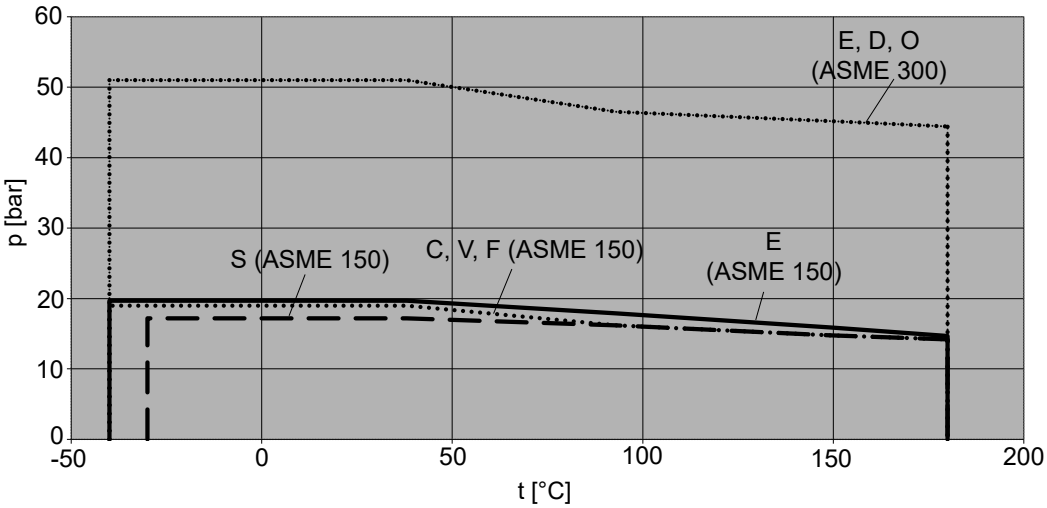

Fig. 4: Pressure limits and temperature limits of ASME flanges for versions with bearing bracket CA (complementary sizes)

On models with ASME flanges, the pressure limits and temperature limits are determined by the lowest value given in the "Pressure limits and temperature limits of the pump" diagram and the "Pressure and temperature limits of ASME flanges" diagram.

Pressure limits and temperature limits of flanges drilled to ASME 125 see diagram "Pressure limits and temperature limits of the pump", material variant G.

2731.5/12-EN

24 Not available for sizes CA80, CA85 and CA120

Technical data

Table 12: Technical data

Size	Bearing bracket	Impeller						Shaft diameter in seal chamber					Diameter of shaft protecting sleeve			Volute casing design[25]	Hydraulic system design[26]	Heatable casing
		Impeller outlet width	Free passage	Impeller inlet diameter	Impeller diameter Max.	Impeller diameter Min.	Number of vanes	Dry shaft	Wet shaft Northern Asia / Europe	Wet shaft Americas	Bearing	Coupling	Gland packing	Mechanical seal Northern Asia / Europe / Southern Asia	Mechanical seal Americas			
		[mm]	[mm]	[mm]	[mm]	[mm]		[mm]	[mm]	[mm]	[mm]	[mm]	[mm]	[mm]	[mm]			
040-025-160	CS40	6	5,7	44	169	130	4	28	33	35	40	24	35	33	35	E	L	✗
040-025-200	CS40	6	5,7	44	209	160	4	28	33	35	40	24	35	33	35	E	L	✗
050-032-125	CS40	10	5,7	63	139	110	6	28	33	35	40	24	35	33	35	E	E	✗
050-032-125.1	CS40	7	6,0	52	139	114	6	28	33	35	40	24	35	33	35	E	E	-
050-032-160	CS40	9	5,8	63	174	135	6	28	33	35	40	24	35	33	35	E	E	✗
050-032-160.1	CS40	6	5,4	52	170	138	6	28	33	35	40	24	35	33	35	E	L	✗
050-032-200	CS40	7	6,7	62	209	170	6	28	33	35	40	24	35	33	35	E	E	✗
050-032-200.1	CS40	6	5,3	54	204	138	6	28	33	35	40	24	35	33	35	E	E	✗
050-032-200.2	CS40	7	6,7	60	209	160	6	28	33	35	40	24	35	33	35	E	L	-
050-032-250	CS50	8	7,1	63	261	205	6	38	43	45	50	32	45	43	45	E	E	✗
065-040-125	CS40	14	9,6	74	139	110	6	28	33	35	40	24	35	33	35	E	E	-
050-032-250.1	CS50	6	5,2	58	254	210	6	38	43	45	50	32	45	43	45	E	E	✗
065-040-160	CS40	13	11,5	70	174	135	6	28	33	35	40	24	35	33	35	E	E	✗
065-040-160.1	CS40	9	8,5	65	169	130	5	28	33	-	40	24	35	33	-	E	L	✗
065-040-200	CS40	9	8,9	69	209	175	6	28	33	35	40	24	35	33	35	E	E	✗
065-040-200.1	CS40	7	6,6	65	209	160	5	28	33	-	40	24	35	33	-	E	L	✗
065-040-250	CS50	8	8,0	73	260	200	6	38	43	45	50	32	45	43	45	E	E	✗
065-040-250.1	CS50	7	6,6	68	260	200	6	38	43	-	50	32	45	43	-	E	L	✗
065-040-315	CS50	8	7,1	75	326	278	6	38	43	45	50	32	45	43	45	E	E	✗
080-050-125	CS40	20	11,6	88	142	114	6	28	33	35	40	24	35	33	35	E	E	-
080-050-160	CS40	17	11,6	87	174	128	6	28	33	35	40	24	35	33	35	E	E	✗
080-050-160.1	CS40	15	9	82	169	130	6	28	33	-	40	24	35	33	-	E	L	✗
080-050-200	CS40	14	11,9	83	219	170	6	28	33	35	40	24	35	33	35	E	E	✗
080-050-200.1	CS40	12	6,7	82	209	160	5	28	33	-	40	24	35	33	-	E	L	✗
080-050-250	CS50	11	10,0	84	260	220	6	38	43	45	50	32	45	43	45	E	E	✗
080-050-250.1	CS50	10	7	85	260	200	6	38	43	-	50	32	45	43	-	E	L	✗
080-050-315	CS50	10	9,5	86	323	260	6	38	43	45	50	32	45	43	45	E	E	✗
080-050-315.1	CS50	8	7,6	85	320	260	6	38	43	-	50	32	45	43	-	E	L	✗
100-065-125	CS40	26	12,9	99	141	114	6	28	33	35	40	24	35	33	35	E	L	-
100-065-160	CS50	21	12,2	92	174	132	6	38	43	45	50	32	45	43	45	E	L	-
100-065-200	CS50	17	13,3	100	219	165	6	38	43	45	50	32	45	43	45	E	L	✗
100-065-250	CS50	15	14,3	101	260	220	6	38	43	45	50	32	45	43	45	E	L	✗
100-065-315	CS60	14	13,0	107	320	245	6	48	53	55	60	42	55	53	55	E	E	✗
125-080-160	CS50	32	15,1	124	174	138	6	38	43	45	50	32	45	43	45	E	E	-
125-080-200	CS50	25	15,2	115	219	165	6	38	43	45	50	32	45	43	45	E	L	✗
125-080-200.1	CS50	22	11,9	116	209	140	7	38	43	-	50	32	45	43	-	E	L	✗
125-080-250	CS50	19	15,8	115	269	220	6	38	43	45	50	32	45	43	45	E	L	✗
125-080-315	CS60	19	17,8	115	334	281	6	48	53	55	60	42	55	53	55	E	L	✗
125-080-400	CS60	15	14,3	129	398	265	6	48	53	55	60	42	55	53	55	E	E	✗
125-100-160	CS50	38	16,4	135	185	155	6	38	43	45	50	32	45	43	45	E	L	✗
125-100-200	CS50	33	17,9	142	219	170	6	38	43	45	50	32	45	43	45	E	L	-
125-100-250	CS60	27	18,8	145	262	216	6	48	53	55	60	42	55	53	55	E	L	✗
125-100-315	CS60	23	19,9	142	334	250	6	48	53	55	60	42	55	53	55	E	E	✗
125-100-400	CS60	18	17,1	142	401	329	6	48	53	55	60	42	55	53	55	E	E	-

25 D = double volute, E = single volute
26 E = extended-flow hydraulic system, L = standard-flow hydraulic system

Size	Bearing bracket	Impeller						Shaft diameter in seal chamber					Diameter of shaft protecting sleeve			Volute casing design[25]	Hydraulic system design[26]	Heatable casing
		Impeller outlet width	Free passage	Impeller inlet diameter	Impeller diameter Max.	Impeller diameter Min.	Number of vanes	Dry shaft	Wet shaft Northern Asia / Europe	Wet shaft Americas	Bearing	Coupling	Gland packing	Mechanical seal Northern Asia / Europe / Southern Asia	Mechanical seal Americas			
		[mm]	[mm]	[mm]	[mm]	[mm]		[mm]	[mm]	[mm]	[mm]	[mm]	[mm]	[mm]	[mm]			
150-125-200	CS60	41	21,1	160	224	162	6	48	53	55	60	42	55	53	55	E	L	-
150-125-250	CS60	37	22,4	162	269	218	6	48	53	55	60	42	55	53	55	E	E	✗
150-125-315	CS60	31	22,6	162	334	280	6	48	53	55	60	42	55	53	55	E	E	✗
150-125-400	CS60	26	20,9	162	419	330	6	48	53	55	60	42	55	53	55	E	E	✗
150-125-510	CA80.1	23,2	23,0	175	508	400	6	60	65	65	80	55	70	65	65	D	-	-
200-150-200	CS60	60	25,2	179	224	158	5	48	53	55	60	42	55	53	55	E	-	-
200-150-250	CS60	49	23,0	191	269	220	6	48	53	55	60	42	55	53	55	E	L	✗
200-150-315	CS80	40	26,9	192	334	264	6	60	65	65	80	48	70	65	65	E	L	✗
200-150-400	CS80	33	23,8	191	419	330	6	60	65	65	80	48	70	65	65	E	L	✗
200-150-500 [27]	CS80	23	19,1	190	504	400	7	60	65	65	80	48	70	65	65	D	-	✗
200-150-510	CA80.1	30,2	22,0	175	508	404	7	60	65	65	80	55	70	65	65	D	-	-
200-200-250 [27]	CS80	62	37,2	190	260	200	5	60	65	65	80	48	70	65	65	E	-	-
250-200-275	CA80.1	72	38,0	214	280	247	5	60	65	65	80	55	70	65	65	E	-	-
250-200-275.1	CA80.1	68	32,0	201	280	209	5	60	65	65	80	55	70	65	65	E	-	-
250-200-315 [27]	CS80	50	20,8	222	320	260	7	60	65	65	80	48	55	65	65	E	-	✗
250-200-320	CA80.1	58	24,0	214	325	256	5	60	65	65	80	55	70	65	65	D	-	✗
250-200-375	CA80.1	48	25,0	213	373	305	7	60	65	65	80	55	70	65	65	D	-	✗
250-200-400 [27]	CS80	40	18,4	222	404	320	8	60	65	65	80	48	70	65	65	D	-	✗
250-200-435	CA80	41	26,0	219	433	364	7	60	65	65	80	55	70	65	65	D	-	✗
250-200-500 [27]	CS80	32	20,6	222	504	400	7	60	65	65	80	48	70	65	65	D	-	✗
250-200-510	CA80.1	35	26,0	222	508	390	7	60	65	65	80	55	70	65	65	D	-	-
300-250-295	CA80.2	88	45,0	252	322	269	4	60	65	65	80	55	70	65	65	E	-	-
300-250-295.1	CA80.2	91	45,0	230	322	245	4	60	65	65	80	55	70	65	65	E	-	-
300-250-315 [27]	CS80	73	26,7	270	324	260	6	60	65	65	80	48	70	65	65	D	-	✗
300-250-320	CA80.1	81	45,0	251	327	290	5	60	65	65	80	55	70	65	65	D	-	✗
300-250-320.1	CA80.1	80	38,0	236	327	245	5	60	65	65	80	55	70	65	65	D	-	✗
300-250-375	CA80.2	68	31,0	248	373	299	5	60	65	65	80	55	70	65	65	D	-	-
300-250-435	CA85	56	25,0	250	433	354	7	60	65	65	80	70	70	70	65	D	-	-
300-250-510	CA85.1	47	31,0	255	508	424	7	65	70	70	85	70	80	70	65	D	-	-
350-300-350	CA85.2	103	52,0	294	375	313	4	65	70	70	85	70	80	70	65	D	-	-
350-300-350.1	CA85.2	105	52,0	270	375	285	4	65	70	70	85	70	80	70	65	D	-	-
350-300-375	CA85.1	94	52,0	292	380	333	5	65	70	70	85	70	80	70	65	D	-	-
350-300-375.1	CA85.1	94	44,0	275	380	286	5	65	70	70	85	70	80	70	65	D	-	-
350-300-435	CA85	77	35,0	285	434	343	5	65	70	70	85	70	80	70	65	D	-	-
350-300-510	CA85.1	65	35,0	287	508	412	7	65	70	70	85	70	80	70	65	D	-	-
400-400-400	CA85.2	125	60,0	342	422	364	4	65	70	70	85	70	80	70	65	D	-	-
400-400-400.1	CA85.2	127	60,0	312	422	332	4	65	70	70	85	70	80	70	65	D	-	-
400-400-435	CA85.1	111	63,0	340	434	393	5	65	70	70	85	70	80	70	65	D	-	-
400-400-435.1	CA85.1	112	53,0	320	434	333	5	65	70	70	85	70	80	70	65	D	-	-
400-400-510	CA120	92	41,0	337	508	400	5	100	115	115	120	95	125	115	65	D	-	-

2731.5/12-EN

27 In Europe replaced by sizes with bearing bracket CA (complementary sizes).

Dimensions and connections

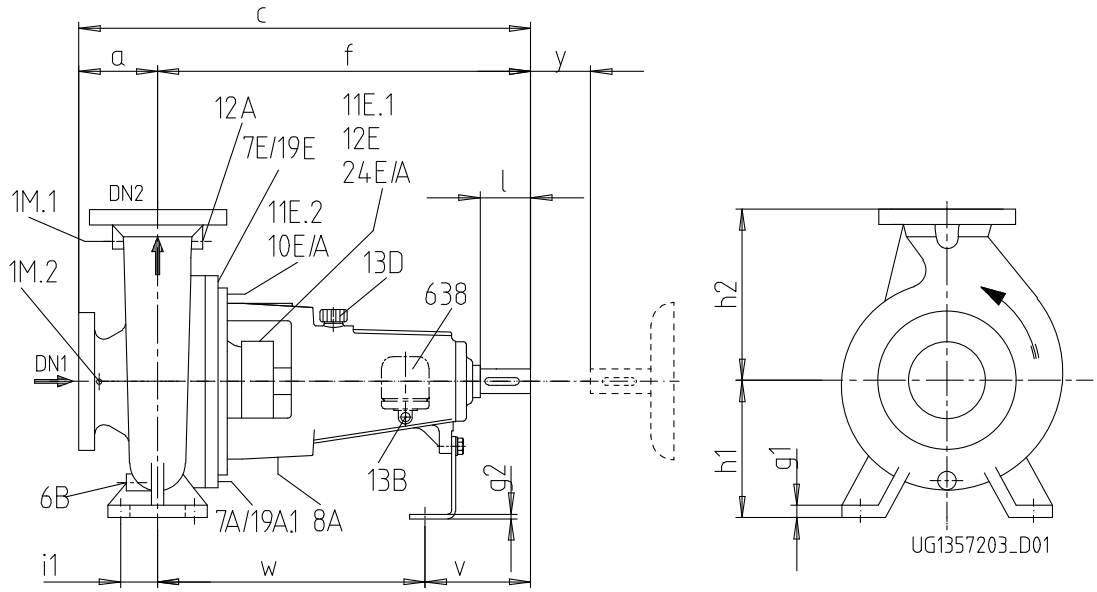

Fig. 5: Dimensions and connections of the pump

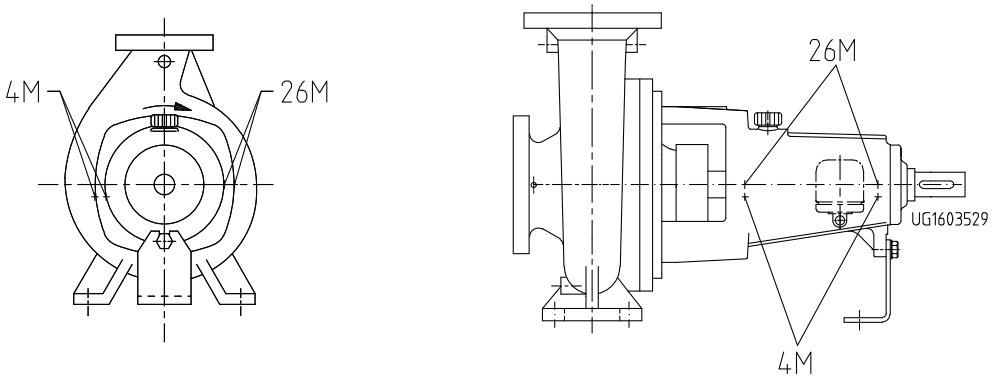

Fig. 6: Connections for shock pulse measurement and temperature measurement

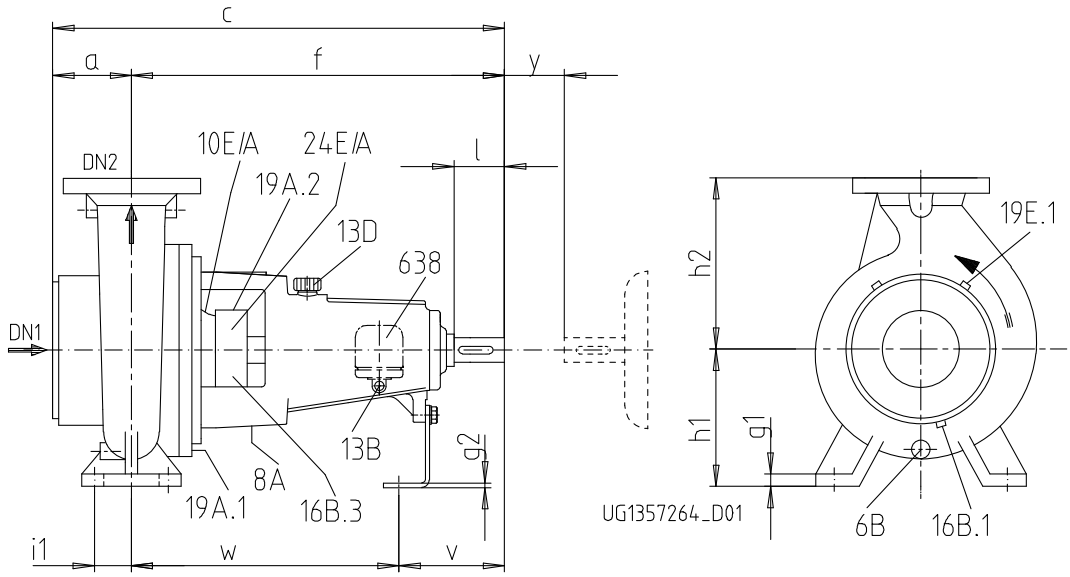

Fig. 7: Dimensions and connections of heatable version

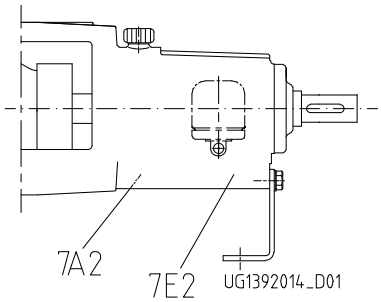

Fig. 8: Connections for version with coolable bearing bracket

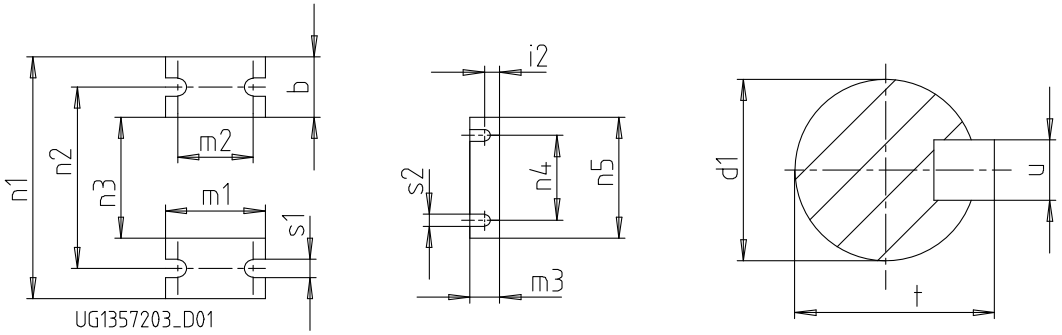

Fig. 9: Dimensions of pump feet and shaft end

Gland packing

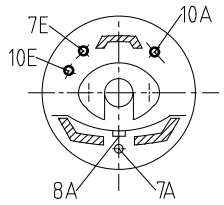

Single mechanical seal

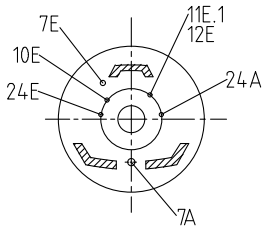

Double mechanical seal

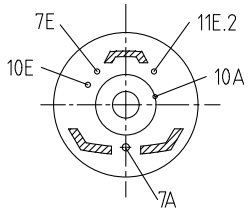

Heatable single mechanical seal

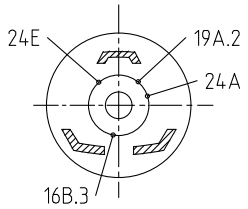

Shaft seal connections

Table 13: Connections Northern Asia / Europe

Connection	Discharge nozzle			Description
	≤ DN 50	DN 65-DN 80	≥ DN 100	
1M.1	G1/4	G3/8	G1/2	Pressure gauge
1M.2	G1/4	G3/8	G1/2	Pressure gauge
4M	G1/4			Temperature measuring instrument
6B	G1/4	G3/8	G1/2	Fluid drain
7E/A[28)]	Ø 12 (CS40: Ø 8)			Cooling liquid IN/OUT
7E2/A2[28)]	G1 (CS40: G3/4)			Cooling liquid IN/OUT
8A[28)]	Rp1/2			Leakage drain
10E/A	G1/4			Barrier fluid IN/OUT
11E.1	G1/4			Flushing liquid IN
11E.2	G1/4			Flushing liquid IN
12E	G1/4			Circulation liquid IN
12A	G1/4	G3/8	G1/2	Circulation liquid OUT
13B	G3/8			Oil drain
13D	Ø 20			Vent plug
16B.1	G1/4			Condensate drain
16B.3	G1/4			Condensate drain
19E	Ø 12 (CS40: Ø 8)			Heating medium IN
19E.1	G3/8			Heating medium IN
19A.1	Ø 12 (CS40: Ø 8)			Heating medium OUT

28 Optional

Connection	Discharge nozzle			Description
	≤ DN 50	DN 65-DN 80	≥ DN 100	
19A.2	G3/8			Heating medium OUT
24E/A	G1/4			Quench fluid IN/OUT
26M	M8			Vibration measurement
638	Rp1/4			Constant level oiler

Table 14: Connections Southern Asia

Connection	Discharge nozzle			Description
	≤ DN 50	DN 65-DN 80	≥ DN 100	
1M.1	G1/4[29]	G3/8[29]	G1/2[29]	Pressure gauge
1M.2	G1/4[29]	G3/8[29]	G1/2[29]	Pressure gauge
4M	NPT1/4			Temperature measuring instrument
6B	G1/4[29]	G3/8[29]	G1/2[29]	Fluid drain
7E/A[28]	Ø 12 (CS40: Ø 8)			Cooling liquid IN/OUT
7E2/A2[28]	G1 (CS40: G3/4)[29]			Cooling liquid IN/OUT
8A[28]	Rp1/2			Leakage drain
10 E/A	G1/4[29]			Barrier fluid IN/OUT
11 E.1	G1/4[29]			Flushing liquid IN
11 E.2	G1/4[29]			Flushing liquid IN
12 E	G1/4[29]			Circulation liquid IN
12A	G1/4[29]	G3/8[29]	G1/2[29]	Circulation liquid OUT
13B	G3/8			Oil drain
13D	Ø 20			Vent plug
16B.1	G1/4			Condensate drain
16B.3	G1/4			Condensate drain
19E	Ø 12 (CS40: Ø 8)			Heating medium IN
19E.1	G3/8			Heating medium IN
19A.1	Ø 12 (CS40: Ø 8)			Heating medium OUT
19A.2	G3/8			Heating medium OUT
24E/A	G1/4[29][30]			Quench fluid IN/OUT
26M	M8			Vibration measurement
638	Rp1/4			Constant level oiler

Table 15: Connections Americas

Connection	Discharge nozzle			Description
	≤ DN 50	DN 65-DN 80	≥ DN 100	
1M.1	NPT1/4	NPT1/4	NPT1/4	Pressure gauge
1M.2	NPT1/4	NPT1/4	NPT1/4	Pressure gauge
4M	NPT 1/4			Temperature measuring instrument
6B	NPT1/4	NPT3/8	NPT1/2	Fluid drain
7E/A[28]	Ø 12 (CS40: Ø 8)			Cooling liquid IN/OUT
7E2/A2[28]	NPT1 (CS40: NPT3/4)			Cooling liquid IN/OUT
8A[28]	Rp1/2			Leakage drain
10E/A	NPT1/4			Barrier fluid IN/OUT
11E.1	NPT1/4			Flushing liquid IN
11E.2	NPT1/4			Flushing liquid IN
12E	NPT1/4			Circulation liquid IN
12A	NPT1/4	NPT1/4	NPT1/4	Circulation liquid OUT
13B	NPT1/4 (CS80: NPT1/2)			Oil drain
13D	Ø 20			Vent plug
16B.1	G1/4			Condensate drain
16B.3	G1/4			Condensate drain
19E	Ø 12 (CS40: Ø 8)			Heating medium IN
19E.1	G3/8			Heating medium IN

29 Material variants G and S are designed with a G thread; material variant C is designed with an NPT thread.
30 Cartridge seals generally with NPT thread

Connection	Discharge nozzle			Description
	≤ DN 50	DN 65-DN 80	≥ DN 100	
19A.1	Ø 12 (CS40: Ø 8)			Heating medium OUT
19A.2	G3/8			Heating medium OUT
24E/A	NPT1/4			Quench fluid IN/OUT
26M	M8			Vibration measurement
638	NPT1/4			Constant level oiler

Table 16: Pump dimensions

Size	Bearing bracket	Pump dimensions [mm]														
		DN1	DN2	a	b	c	f	g1	g2	h1	h2	m1	m3	n1	n3	n5
040-025-160	CS40	40	25	80	50	465	385	15	4	132	160	100	48	240	140	160
040-025-200	CS40	40	25	80	50	465	385	15	4	160	180	100	48	240	140	160
050-032-125	CS40	50	32	80	50	465	385	15	4	112	140	100	48	190	90	160
050-032-125.1	CS40	50	32	80	50	465	385	15	4	112	140	100	48	190	90	160
050-032-160	CS40	50	32	80	50	465	385	15	4	132	160	100	48	240	140	160
050-032-160.1	CS40	50	32	80	50	465	385	15	4	132	160	100	48	240	140	160
050-032-200	CS40	50	32	80	50	465	385	18	4	160	180	100	48	240	140	160
050-032-200.1	CS40	50	32	80	50	465	385	18	4	160	180	100	48	240	140	160
050-032-200.2	CS40	50	32	80	50	465	385	18	4	160	180	100	48	240	140	160
050-032-250	CS50	50	32	100	65	600	500	18	4	180	225	125	48	320	190	160
050-032-250.1	CS50	50	32	100	65	600	500	18	4	180	225	125	48	320	190	160
065-040-125	CS40	65	40	80	50	465	385	15	4	112	140	100	48	210	110	160
065-040-160	CS40	65	40	80	50	465	385	15	4	132	160	100	48	240	140	160
065-040-160.1	CS40	65	40	80	50	465	385	15	4	132	160	100	48	240	140	160
065-040-200	CS40	65	40	100	50	485	385	18	4	160	180	100	48	265	165	160
065-040-200.1	CS40	65	40	100	50	485	385	15	4	160	180	100	48	265	165	160
065-040-250	CS50	65	40	100	65	600	500	18	4	180	225	125	48	320	190	160
065-040-250.1	CS50	65	40	100	65	600	500	18	4	180	225	125	48	320	190	160
065-040-315	CS50	65	40	125	65	625	500	18	6	200	250	125	48	345	215	160
080-050-125	CS40	80	50	100	50	485	385	18	4	132	160	100	48	240	140	160
080-050-160	CS40	80	50	100	50	485	385	18	4	160	180	100	48	265	165	160
080-050-160.1	CS40	80	50	100	50	485	385	15	4	160	180	100	48	262	162	160
080-050-200	CS40	80	50	100	50	485	385	18	4	160	200	100	48	265	165	160
080-050-200.1	CS40	80	50	100	50	485	385	15	4	160	200	100	48	265	165	160
080-050-250	CS50	80	50	125	65	625	500	18	4	180	225	125	48	320	190	160
080-050-250.1	CS50	80	50	125	65	625	500	18	4	180	225	125	48	320	190	160
080-050-315	CS50	80	50	125	65	625	500	18	6	225	280	125	48	345	215	160
080-050-315.1	CS50	80	50	125	65	625	500	18	6	225	280	125	48	345	215	160
100-065-125	CS40	100	65	100	65	485	385	18	4	160	180	125	48	280	150	160
100-065-160	CS50	100	65	100	65	600	500	18	4	160	200	125	48	280	150	160
100-065-200	CS50	100	65	100	65	600	500	18	4	180	225	125	48	320	190	160
100-065-250	CS50	100	65	125	80	625	500	20	6	200	250	160	48	360	200	160
100-065-315	CS60	100	65	125	80	655	530	20	6	225	280	160	48	400	240	160
125-080-160	CS50	125	80	125	65	625	500	18	4	180	225	125	48	320	190	160
125-080-200	CS50	125	80	125	65	625	500	18	4	180	250	125	48	345	215	160
125-080-200.1	CS50	125	80	125	65	625	500	18	4	180	250	125	48	345	215	160
125-080-250	CS50	125	80	125	80	625	500	18	6	225	280	160	48	400	240	160
125-100-160	CS50	125	100	125	80	625	500	18	6	200	280	160	48	360	200	160
125-100-200	CS50	125	100	125	80	625	500	18	6	200	280	160	48	360	200	160
125-080-315	CS60	125	80	125	80	655	530	20	6	250	315	160	48	400	240	160
125-080-400	CS60	125	80	125	80	655	530	20	6	280	355	160	48	435	275	160
125-100-250	CS60	125	100	140	80	670	530	18	6	225	280	160	48	400	240	160
125-100-315	CS60	125	100	140	80	670	530	18	6	250	315	160	48	400	240	160
125-100-400	CS60	125	100	140	100	670	530	20	6	280	355	200	48	500	300	160
150-125-200	CS60	150	125	140	80	670	530	20	6	250	315	160	48	400	240	160
150-125-250	CS60	150	125	140	80	670	530	20	6	250	355	160	48	400	240	160
150-125-315	CS60	150	125	140	100	670	530	20	6	280	355	200	48	500	300	160
150-125-400	CS60	150	125	140	100	670	530	20	6	315	400	200	48	500	300	160

Size	Bearing bracket	Pump dimensions [mm]														
		DN1	DN2	a	b	c	f	g1	g2	h1	h2	m1	m3	n1	n3	n5
150-125-510	CA80.1	150	125	180	100	847	667	22	8	375	530	200	60	550	350	200
200-150-200	CS60	200	150	180	100	710	530	20	6	280	400	200	48	550	350	160
200-150-250	CS60	200	150	160	100	690	530	20	6	280	375	200	48	500	300	160
200-150-315	CS80	200	150	160	100	830	670	20	8	315	400	200	60	550	350	200
200-150-400	CS80	200	150	160	100	830	670	20	8	315	450	200	60	550	350	200
200-150-500[31)]	CS80	200	150	180	100	850	670	22	8	375	500	200	60	550	350	200
200-150-510	CA80.1	200	150	195	100	868	673	22	8	375	570	200	60	550	350	200
200-200-250[31)]	CS80	200	200	180	100	850	670	22	8	355	425	200	60	550	350	200
250-200-275	CA80.1	250	200	205	100	904	699	22	8	355	430	200	60	550	350	200
250-200-275.1	CA80.1	250	200	205	100	904	699	22	8	355	430	200	60	550	350	200
250-200-315[31)]	CS80	250	200	200	100	870	670	22	8	355	450	200	60	550	350	200
250-200-320	CA80.1	250	200	215	100	909	694	22	8	355	460	200	60	550	350	200
250-200-375	CA80.1	250	200	200	100	900	700	22	8	375	480	200	60	550	350	200
250-200-400[31)]	CS80	250	200	180	100	850	670	22	8	355	500	200	60	550	350	200
250-200-435	CA80	250	200	200	100	873	673	22	8	400	520	200	60	660	460	200
250-200-500[31)]	CS80	250	200	200	100	870	670	22	8	425	560	200	60	660	460	200
250-200-510	CA80.1	250	200	205	100	876	671	22	12	425	580	200	60	660	460	200
300-250-295	CA80.2	300	250	190	130	960	770	26	12	475	660	260	60	690	430	200
300-250-295.1	CA80.2	300	250	190	130	960	770	26	12	475	660	260	60	690	430	200
300-250-315[31)]	CS80	300	250	250	130	920	670	26	8	400	560	260	60	690	430	200
300-250-320	CA80.1	300	250	230	130	921	691	26	8	400	540	260	60	690	430	200
300-250-320.1	CA80.1	300	250	230	130	921	691	26	8	400	540	260	60	690	430	200
300-250-375	CA80.2	300	250	245	130	944	699	26	12	425	570	260	60	690	430	200
300-250-435	CA85	300	250	240	130	972	732	26	12	450	620	260	60	800	540	200
300-250-510	CA85.1	300	250	240	130	985	745	26	12	475	625	260	60	800	540	200
350-300-350	CA85.1	350	300	215	180	1030	815	32	12	560	730	360	60	900	540	200
350-300-350.1	CA85.1	350	300	215	180	1030	815	32	12	560	730	360	60	900	540	200
350-300-375	CA85.1	350	300	250	180	1001	751	32	12	475	620	360	60	900	540	200
350-300-375.1	CA85.1	350	300	250	180	1001	751	32	12	475	620	360	60	900	540	200
350-300-435	CA85	350	300	255	180	988	733	32	12	500	660	360	60	900	540	200
350-300-510	CA85.1	350	300	300	180	1077	777	32	12	560	700	360	60	900	540	200
400-400-400	CA85.2	400	400	270	225	1110	840	40	12	630	820	400	60	1250	800	200
400-400-400.1	CA85.2	400	400	270	225	1110	840	40	12	630	820	400	60	1250	800	200
400-400-435	CA85.1	400	400	330	225	1096	766	40	12	560	700	360	60	1000	550	200
400-400-435.1	CA85.1	400	400	330	225	1096	766	40	12	560	700	360	60	1000	550	200
400-400-510	CA120	400	400	330	225	1470	1140	40	12	560	780	360	60	1000	550	200

Table 17: Dimensions of pump feet and shaft end

Size	Bearing bracket	Shaft end [mm]					Pump feet [mm]								
		d1	l	t	u	y	i1	i2	m2	n2	n4	s1	s2	v	w
040-025-160	CS40	24	50	27	8	100	35	20	70	190	110	14	14	100	285
040-025-200	CS40	24	50	27	8	100	35	20	70	190	110	14	14	100	285
050-032-125	CS40	24	50	27	8	100	35	20	70	140	110	14	14	100	285
050-032-125.1	CS40	24	50	27	8	100	35	20	70	140	110	14	14	100	285
050-032-160	CS40	24	50	27	8	100	35	20	70	190	110	14	14	100	285
050-032-160.1	CS40	24	50	27	8	100	35	20	70	190	110	14	14	100	285
050-032-200	CS40	24	50	27	8	100	35	20	70	190	110	14	14	100	285
050-032-200.1	CS40	24	50	27	8	100	35	20	70	190	110	14	14	100	285
050-032-200.2	CS40	24	50	27	8	100	35	20	70	190	110	14	14	100	285
050-032-250	CS50	32	80	35	10	100	47,5	20	95	250	110	14	14	130	370
050-032-250.1	CS50	32	80	35	10	100	47,5	20	95	250	110	14	14	130	370
065-040-125	CS40	24	50	27	8	100	35	20	70	160	110	14	14	100	285
065-040-160	CS40	24	50	27	8	100	35	20	70	190	110	14	14	100	285
065-040-160.1	CS40	24	50	27	8	100	35	20	70	190	110	14	14	100	285

31 In Europe replaced by sizes with bearing bracket CA (complementary sizes).

Size	Bearing bracket	Shaft end [mm]					Pump feet [mm]								
		d1	l	t	u	y	i1	i2	m2	n2	n4	s1	s2	v	w
065-040-200	CS40	24	50	27	8	100	35	20	70	212	110	14	14	100	285
065-040-200.1	CS40	24	50	27	8	100	35	20	70	212	110	14	14	100	285
065-040-250	CS50	32	80	35	10	100	47,5	20	95	250	110	14	14	130	370
065-040-250.1	CS50	32	80	35	10	100	47,5	20	95	250	110	14	14	130	370
065-040-315	CS50	32	80	35	10	100	47,5	20	95	280	110	14	14	130	370
080-050-125	CS40	24	50	27	8	100	35	20	70	190	110	14	14	100	285
080-050-160	CS40	24	50	27	8	100	35	20	70	212	110	14	14	100	285
080-050-160.1	CS40	24	50	27	8	100	35	20	70	212	110	14	14	100	285
080-050-200	CS40	24	50	27	8	100	35	20	70	212	110	14	14	100	285
080-050-200.1	CS40	24	50	27	8	100	35	20	70	212	110	14	14	100	285
080-050-250	CS50	32	80	35	10	100	47,5	20	95	250	110	14	14	130	370
080-050-250.1	CS50	32	80	35	10	100	47,5	20	95	250	110	14	14	130	370
080-050-315	CS50	32	80	35	10	100	47,5	20	95	280	110	14	14	130	370
080-050-315.1	CS50	32	80	35	10	100	47,5	20	95	280	110	14	14	130	370
100-065-125	CS40	24	50	27	8	100	47,5	20	95	212	110	14	14	100	285
100-065-160	CS50	32	80	35	10	100	47,5	20	95	212	110	14	14	130	370
100-065-200	CS50	32	80	35	10	140	47,5	20	95	250	110	14	14	130	370
100-065-250	CS50	32	80	35	10	140	60	20	120	280	110	18	14	130	370
100-065-315	CS60	42	110	45	12	140	60	20	120	315	110	18	14	160	370
125-080-160	CS50	32	80	35	10	140	47,5	20	95	250	110	14	14	130	370
125-080-200	CS50	32	80	35	10	140	47,5	20	95	280	110	14	14	130	370
125-080-200.1	CS50	32	80	35	10	140	47,5	20	95	280	110	14	14	130	370
125-080-250	CS50	32	80	35	10	140	60	20	120	315	110	18	14	130	370
125-080-315	CS60	42	110	45	12	140	60	20	120	315	110	18	14	160	370
125-080-400	CS60	42	110	45	12	140	60	20	120	355	110	18	14	160	370
125-100-160	CS50	32	80	35	10	140	60	20	120	280	110	19	14	130	370
125-100-200	CS50	32	80	35	10	140	60	20	120	280	110	18	14	130	370
125-100-250	CS60	42	110	45	12	140	60	20	120	315	110	18	14	160	370
125-100-315	CS60	42	110	45	12	140	60	20	120	315	110	18	14	160	370
125-100-400	CS60	42	110	45	12	140	75	20	150	400	110	23	14	160	370
150-125-200	CS60	42	110	45	12	140	60	20	120	315	110	19	14	160	370
150-125-250	CS60	42	110	45	12	140	60	20	120	315	110	18	14	160	370
150-125-315	CS60	42	110	45	12	140	75	20	150	400	110	23	14	160	370
150-125-400	CS60	42	110	45	12	140	75	20	150	400	110	23	14	160	370
150-125-510	CA80.1	55	110	59	16	180	75	33	150	450	140	24	18	177	490
200-150-200	CS60	42	110	45	12	180	75	20	150	450	110	24	14	160	370
200-150-250	CS60	42	110	45	12	180	75	20	150	400	110	23	14	160	370
200-150-315	CS80	48	110	51	14	180	75	39	150	450	140	23	18	170	500
200-150-400	CS80	48	110	51	14	180	75	39	150	450	140	23	18	170	500
200-150-500[31)]	CS80	48	110	51	14	180	75	39	150	450	140	23	18	177	500
200-150-510	CA80.1	55	110	59	16	200	75	33	150	450	140	24	18	177	496
200-200-250[31)]	CS80	48	110	51	14	180	75	39	150	450	140	23	18	170	500
250-200-275	CA80.1	55	110	59	16	250	75	33	150	450	140	24	18	177	522
250-200-275.1	CA80.1	55	110	59	16	250	75	33	150	450	140	24	18	177	522
250-200-315[31)]	CS80	48	110	51	14	180	75	39	150	450	140	23	18	170	500
250-200-320	CA80.1	55	110	59	16	250	75	33	150	450	140	24	18	177	517
250-200-375	CA80.1	55	110	59	16	250	75	33	150	450	140	24	18	177	523
250-200-400[31)]	CS80	48	110	51	14	180	75	39	150	450	140	23	18	170	500
250-200-435	CA80	55	110	59	16	250	75	33	150	560	140	24	18	177	494
250-200-500[31)]	CS80	48	110	51	14	180	75	39	150	560	140	23	18	170	500
250-200-510	CA80.1	55	110	59	16	250	75	39	150	560	140	24	18	177	494
300-250-295	CA80.2	55	110	59	16	300	95	39	190	560	140	28	18	177	523
300-250-295.1	CA80.2	55	110	59	16	300	95	39	190	560	140	28	18	177	523
300-250-315[31)]	CS80	48	110	51	14	180	95	39	190	560	140	28	18	170	500
300-250-320	CA80.1	55	110	59	16	300	95	33	190	560	140	28	18	177	514
300-250-320.1	CA80.1	55	110	59	16	300	95	33	190	560	140	28	18	177	514
300-250-375	CA80.2	55	110	59	16	300	95	39	190	560	140	28	18	177	522

2731.5/12-EN

Size	Bearing bracket	Shaft end [mm]					Pump feet [mm]								
		d1	l	t	u	y	i1	i2	m2	n2	n4	s1	s2	v	w
300-250-435	CA85	70	140	75	20	250	95	39	190	670	140	28	18	240	492
300-250-510	CA85.1	70	140	75	20	250	95	39	190	670	140	28	18	240	505
350-300-350	CA85.1	70	140	75	20	300	125	39	250	750	140	28	20	240	525
350-300-350.1	CA85.1	70	140	75	20	300	125	39	250	750	140	28	20	240	525
350-300-375	CA85.1	70	140	75	20	300	125	39	250	750	140	28	18	240	511
350-300-375.1	CA85.1	70	140	75	20	300	125	39	250	750	140	28	18	240	511
350-300-435	CA85	70	140	75	20	300	125	39	250	750	140	28	20	240	493
350-300-510	CA85.1	70	140	75	20	300	125	39	250	750	140	34	20	240	537
400-400-400	CA85.2	70	140	75	20	356,5	125	44	250	1100	140	34	20	240	540
400-400-400.1	CA85.2	70	140	75	20	356,5	125	44	250	1100	140	34	20	240	540
400-400-435	CA85.1	70	140	75	20	350	125	39	250	850	140	34	20	240	526
400-400-435.1	CA85.1	70	140	75	20	350	125	39	250	850	140	34	20	240	526
400-400-510	CA120	95	170	100	25	350	125	39	250	850	140	34	20	275	865

2731.5/12-EN

Flange design

Table 18: Flange design by materials

Material	Europe / Northern Asia / Americas / Southern Asia	Americas
G[32)]	EN 1092-2 PN 16 Drilled to ASME B16.1 Class 125	ASME B16.1 Class 125 ASME B16.1 Class 250[33)]
S[34)]	EN 1092-2 PN 16 Drilled to ASME B16.1 Class 150	-
C/F	EN 1092-1 PN 16 Drilled to ASME B16.5 Class 150	ASME B16.5 Class 150
V	EN 1092-1 PN 16 Drilled to ASME B16.5 Class 150	-
D/O[32)]	EN 1092-1 PN 25 Drilled to ASME B16.5 Class 150 Drilled to ASME B16.5 Class 300[35)]	-
E	EN 1092-1 PN 25 Drilled to ASME B16.5 Class 150 Drilled to ASME B16.5 Class 300[35)]	ASME B16.5 Class 150 ASME B16.5Class 300[33)]
D/O[34)]	EN 1092-1 PN 40 Drilled to ASME B16.5 Class 150 Drilled to ASME B16.5 Class 300	-

Scope of supply

Depending on the model, the following items are included in the scope of supply:

- Pump

Drive

- Surface-cooled IEC frame three-phase squirrel-cage motor

Coupling

- Flexible coupling with or without spacer

Contact guard

- Coupling guard

Baseplate

- Baseplate (to ISO 3661), cast or welded, for pump and motor, in torsion-resistant design
- Channel section steel or folded steel plate

Special accessories

- As required

2731.5/12-EN

32 Not for sizes with bearing bracket CA (complementary sizes)
33 Depending on the size
34 Only possible for sizes with bearing bracket CA (complementary sizes)
35 Not possible for size 100-065-125

General assembly drawing with list of components

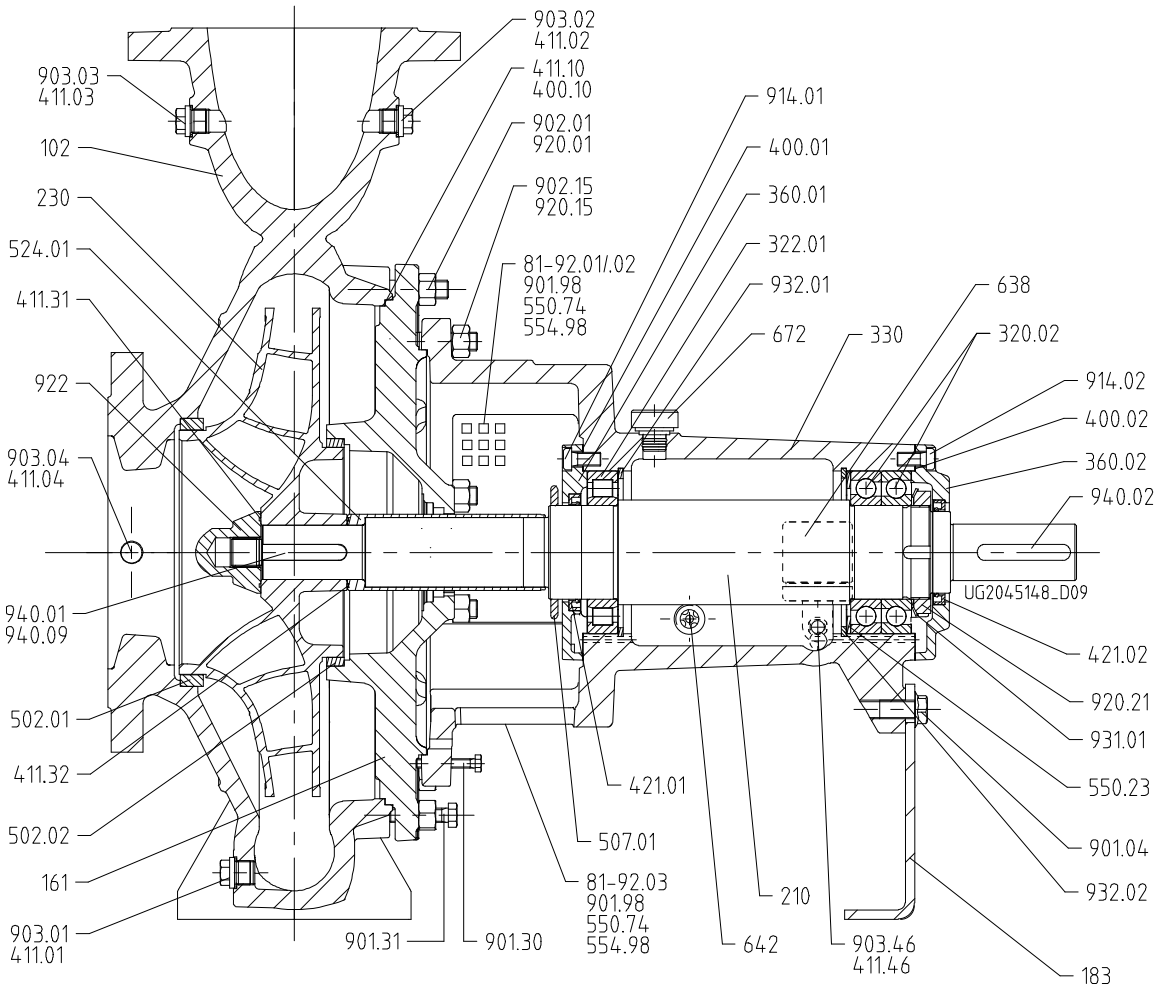

Fig. 10: General assembly drawing of standard version (oil-lubricated)

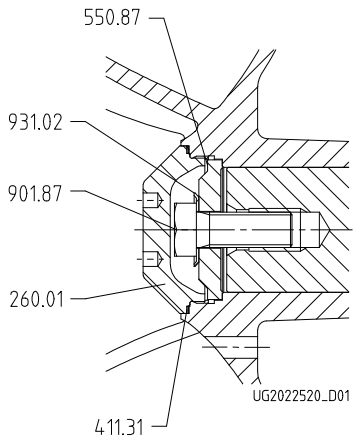

Fig. 11: Version with bearing bracket CA120

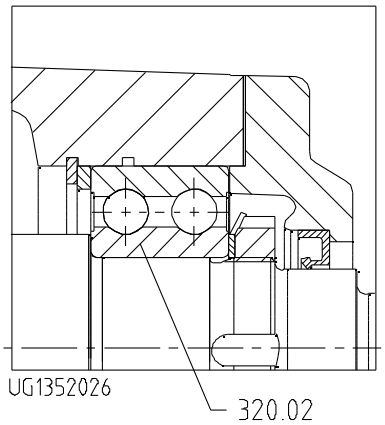

Version with bearing bracket CS40

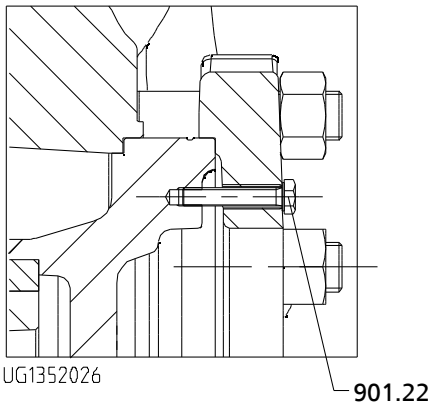

Version with clamped casing cover

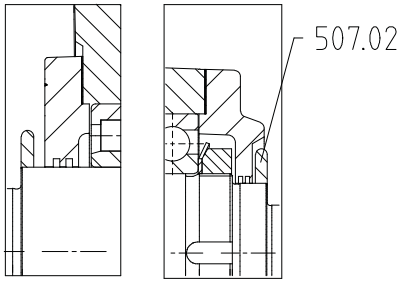

Version with labyrinth seal

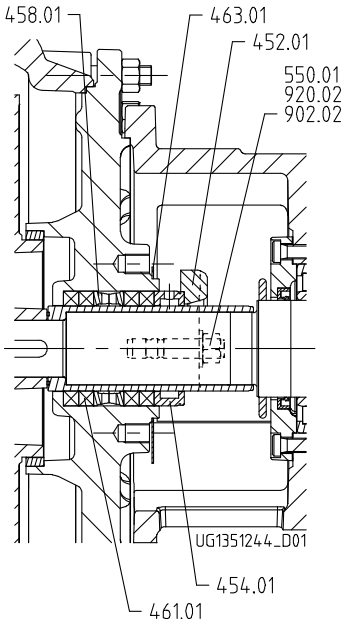

Version with gland packing (bearing bracket CS)

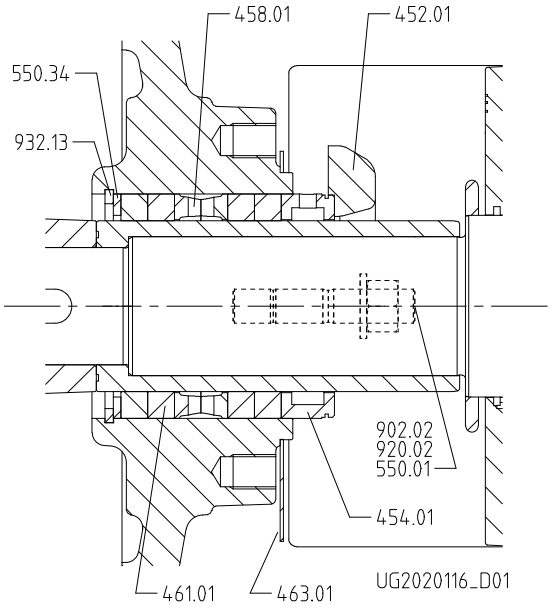

Only possible for version with bearing bracket CA

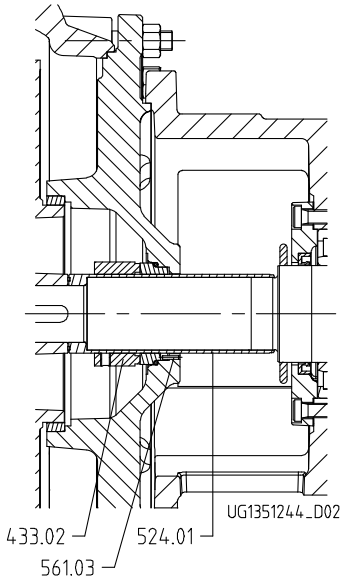

Mechanical seal with conical casing cover (Not available for size 400-xxx-xxx)

2731.5/12-EN

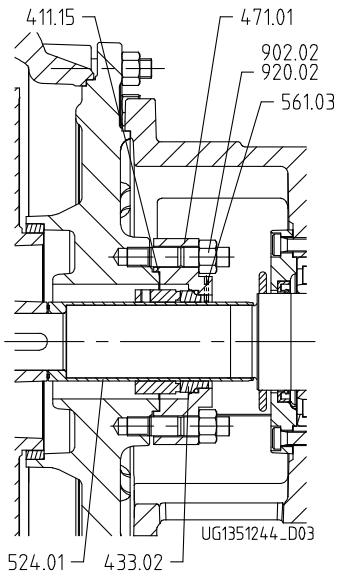

Mechanical seal with cylindrical casing cover

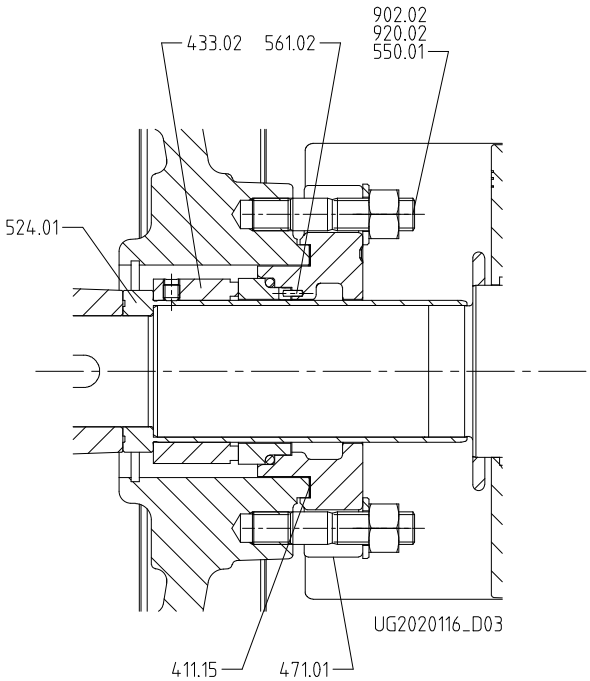

Mechanical seal with cylindrical casing cover (only possible for version with bearing bracket CA)

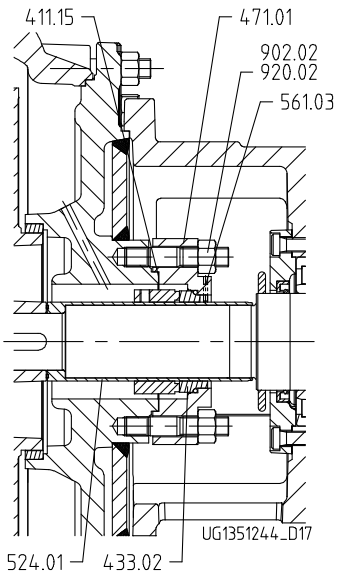

Mechanical seal with cylindrical casing cover (heatable version with welded casing cover) (bearing bracket CS)

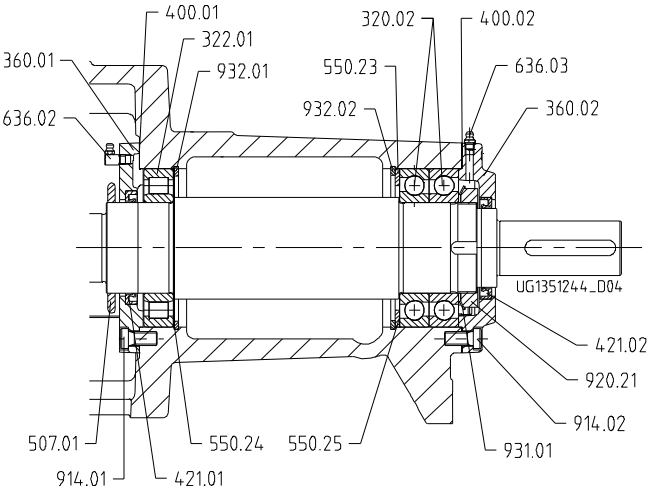

Grease-lubricated version (Medium Duty bearing assembly)

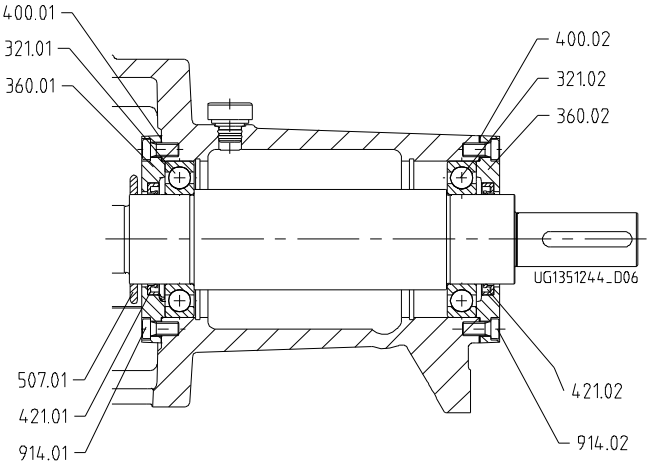

Oil-lubricated version (Economy bearing assembly)

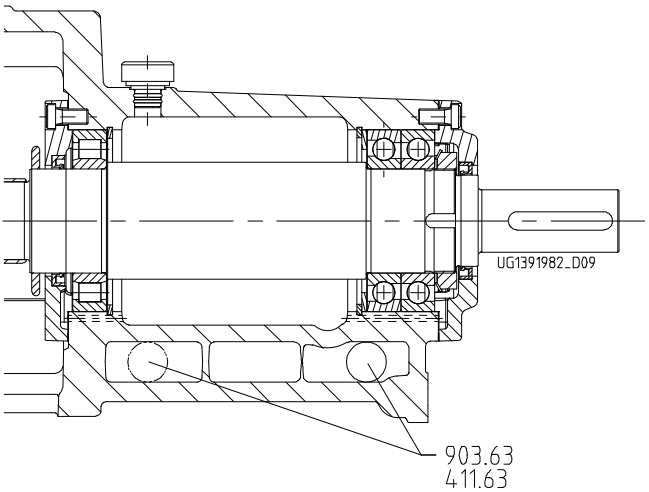

Version with coolable bearing bracket (bearing bracket CS)

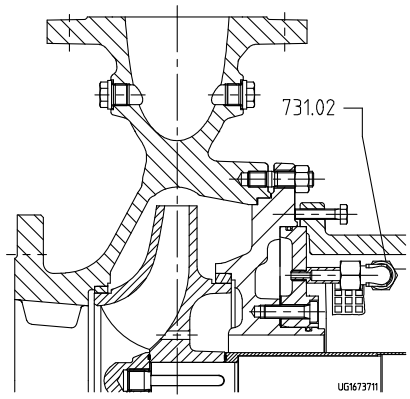

Heatable version, only casing cover cooled/heated

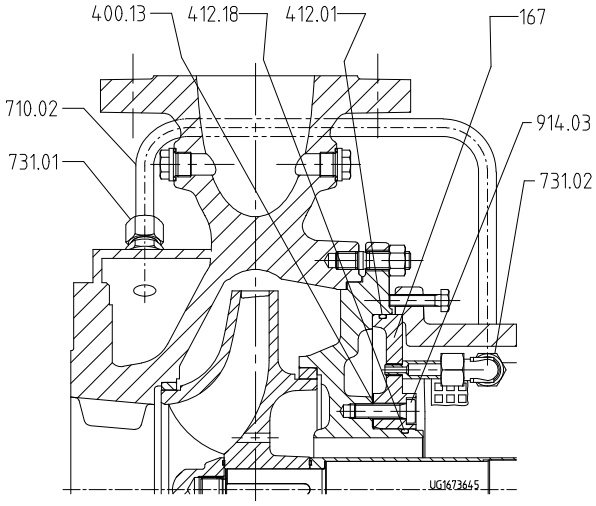

Heatable version with bolted casing cover

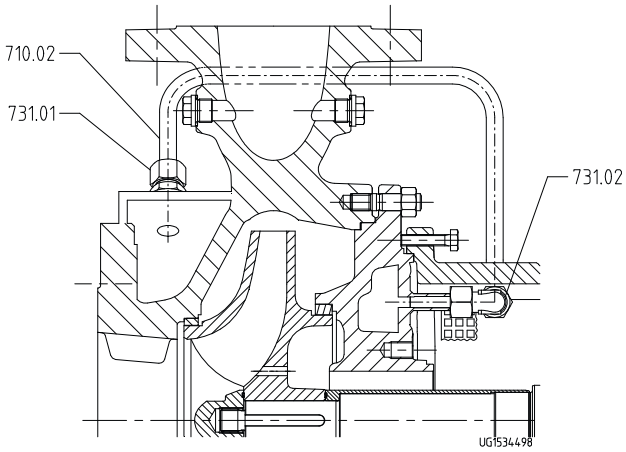

Heatable version with welded casing cover (bearing bracket CS)

Table 19: List of components

Part No.	Comprising	Description
102	102	Volute casing
	400.10[36)]	Gasket
	411.01/.02[37)]/03[37)]/.04[37)]/.10[36)]	Joint ring
	502.01[37)]	Casing wear ring
	902.01	Stud
	903.01/.02[37)]/.03[37)]/.04[37)]	Screw plug
	920.01	Hexagon nut
161	161	Casing cover
	167[38)]	Cover insert
	400.13[38)]	Gasket
	412.01/.18[39)]	O-ring
	502.02[37)]	Casing wear ring
	901.22 [40)]/31	Hexagon head bolt

36 Gasket 400.10 or joint rings 411.10 and 411.15 (411.15 for versions with mechanical seal with seal cover only) depending on the operating temperature. To be ordered separately in spare parts order.
37 Not for all versions.
38 On heatable versions with bolted casing cover only
39 On heatable versions with bolted casing cover and bearing bracket CS only
40 On versions with clamped casing cover only

Part No.	Comprising	Description
161	902.02	Stud
	914.03[39]	Hexagon socket head cap screw
	920.02	Hexagon nut
183	183	Support foot
210	210	Shaft
	920.21[41]	Slotted round nut
	931.01[41]	Lock washer
	940.01/.02/.09[42]	Key
230	230	Impeller
	503.01/.02[37]	Impeller wear ring
260.01[43]	260.01	Impeller hub cap
320.02[41]	320.02	Angular contact ball bearings
321.01[44]/.02[44]	321.01/.02	Deep groove ball bearing
322.01 [41]	322.01	Cylindrical roller bearing
330	330	Bearing bracket
360.01	360.01	Bearing cover
360.02	360.02	Bearing cover
400.01	400.01	Gasket
400.02	400.02	Gasket
411.15[36]	411.15	Joint ring
411.31	411.31	Joint ring
411.32	411.32	Joint ring
421.01	421.01	Lip seal
421.02	421.02	Lip seal
433.02	433.02	Mechanical seal (complete)
452.01	452.01	Gland follower
454.01	454.01	Stuffing box ring
458.01	458.01	Lantern ring
461.01	461.01	Gland packing
463.01	463.01	Drip plate
471.01	471.01	Seal cover
502.01[37]	502.01	Casing wear ring
502.02[37]	502.02	Casing wear ring
503.01[37]	503.01	Impeller wear ring
503.02[37]	503.02	Impeller wear ring
507.01	507.01	Thrower
507.02[45]	507.02	Thrower
524.01	524.01	Shaft protecting sleeve
550.01	550.01	Disc
550.23	550.23	Disc
550.24[46]	550.24	Disc
550.25[46]	550.25	Disc
550.74	550.74	Disc
550.87[43]	550.87	Disc
554.98	554.98	Washer
561.02	561.02	Grooved pin
561.03	561.03	Grooved pin
636.02[46]	636.02	Lubricating nipple
636.03[46]	636.03	Lubricating nipple
638[47]	638	Constant level oiler

41 Not fitted on versions with Economy bearing assembly
42 From CS 60 and bearing bracket CA.
43 Only for CA120
44 On versions with Economy bearing assembly only
45 On versions with labyrinth seal only
46 On grease-lubricated versions only
47 Not applicable for grease-lubricated versions

Part No.	Comprising	Description
642[47)]	642	Oil level sight glass
672[47)]	672	Vent plug
81-92	81-92.01/.02/.03	Cover plate
99-9	411.01/.02/.03/.04/.10/.15/31/.32/.46	Joint ring
	400.01/.02/.10	Gasket
901.04	901.04	Hexagon head bolt
901.30	901.30	Hexagon head bolt
901.31	901.31	Hexagon head bolt
901.32	901.32	Hexagon head bolt
901.87[43)]	901.87	Hexagon head bolt
901.98	901.98	Hexagon head bolt
902.15	902.15	Stud
903.46	903.46	Screw plug
914.01	914.01	Hexagon socket head cap screw
914.02	914.02	Hexagon socket head cap screw
920.15	920.15	Hexagon nut
922	922	Impeller nut
931.02[43)]	931.02	Lock washer
932.01	932.01	Circlip
932.02	932.02	Circlip

The relevant version is indicated in the product literature supplied.

2731.5/12-EN

2024-07-08

KSB SE & Co. KGaA
Johann-Klein-Straße 9 • 67227 Frankenthal (Germany)
Tel. +49 6233 86-0
www.ksb.com

KSB Bombas Hidráulicas S/A
Rua José Rabello Portella, 638
CEP: 13.220-540 - Jardim Maria de Fátima
Várzea Paulista (Brasil)
Tel.: +55 11 4596 8500 • Fax Fax: +55 11 4596 8580
www.ksb.com

KSB Pumps Limited
Plot no. E3 & E4, MIDC, Sinnar, (Malegaon) • Nashik 422 113
Tel. +91 2551 230252
Tel. +91 2551 230253
Tel. +91 2551 229700
Fax +91 2551 230254
www.ksbindia.co.in

2731.5/12-EN