MXV-B

Coverage chart n ≈ 2900 rpm

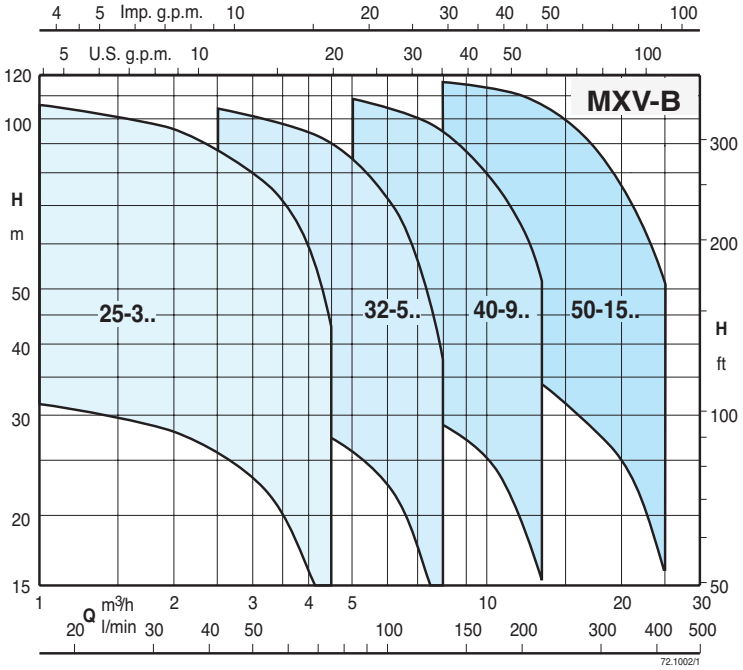

Vertical multi-stage close coupled stainless steel pumps

MXV-B

calpeda®

Construction

Vertical multi-stage close coupled pumps with suction and delivery connections of the same diameter and arranged along the same axis (in-line).
All parts that come into contact with the liquid, are in chrome-nickel stainless steel.
Corrosion-resistant bearing sleeves lubricated by the pumped liquid.
Version with frequency converter (on request)

Applications

For water supply systems.
For clean non-explosive liquids, without solid, filamentary or abrasive matter and non-aggressive for stainless steel (with adaptation of sealing materials on request).
A universal pump for civil and industrial use, for pressure boosting systems, high-pressure washing plants, irrigation, agricultural uses and sport installations.

Operating conditions

Temperature of liquid: from -15 °C to +90 °C.
Ambient temperature up to 40° C.
Maximum permissible pressure in pump casing: 16 bar.
Continuous duty (S3 60% for single-phase pump to 1,5 kW).

Motor

2-pole induction motor, 50 Hz (n ≈ 2900 rpm).
MXV-B: three-phase 230/400 V ± 10% up to 3 kW;
400/690 V ± 10% from 3,7 to 7,5 kW.
MXV-BM: single-phase single-phase 230 V ± 10%, with thermal protector.
Insulation class F.
Protection IP 54.
Three-phase motor suitable for operation with frequency converter.
IE2 efficiency class for single-phase motors up to 1,1 kW.
IE3 efficiency class for three-phase motors.
Constructed in accordance with EN 60034-1, EN 60034-30-1.
EN 60335-1, EN 60335-2-41.

Special features on request

Other voltages.
Frequency 60 Hz (as per 60 Hz data sheet).
IP protection: IP55
Special mechanical seal
Pump casing seal rings in FPM.
Higher or lower liquid or ambient temperatures.

Designation

Example MXV-BM EI 25-305 O
MXV-B = Series
M = Single-phase motor (up to 1.5 kW)
EI = With frequency converter I-MAT
25 = DN ports in mm
3 = Rated capacity in m3/h
05 = Number of stages
O = Oval flanges

The electropumps comply with the European Regulation no. 547/2012.

Materials

Components	Material
External jacket	Chrome-nickel steel 1.4301 EN 10088 (AISI 304)
Suction casing	Chrome-nickel steel 1.4301 EN 10088 (AISI 304)
Delivery casing	Chrome-nickel steel 1.4301 EN 10088 (AISI 304)
Stage casing	Chrome-nickel steel 1.4301 EN 10088 (AISI 304)
Impeller	Chrome-nickel steel 1.4301 EN 10088 (AISI 304)
Lower cover	Chrome-nickel steel 1.4301 EN 10088 (AISI 304)
Upper cover	Chrome-nickel steel 1.4301 EN 10088 (AISI 304)
Spacer sleeve	Chrome-nickel steel 1.4301 EN 10088 (AISI 304)
Shaft	Chrome-nickel steel 1.4301 EN 10088 (AISI 304)
Plug	Chrome-nickel steel 1.4301 EN 10088 (AISI 304)
Mechanical seal	Hard metal/Carbon/EPDM
Wear ring	PPS
O-ring	NBR
Oval Counterflanges	Steel 1.4301 EN 10088 (AISI 304) (galvanized steel for MXV-B 50)

MXV-B

EI: Pumps with frequency converter

The MXV-B EI pumps are available with power from 0,75 kW up to 7,5 kW, the pumps are equipped with I-MAT installed on board
Which allows to realize a variable-speed system extremely compact and efficient, ideal in applications of water supply and in the distribution of hot and cold water.
The pump is equipped with transducers suitable for operation and is already programmed at the factory.

Features

- Energy saving
- Compact design
- Easy to use
- Programmable to suit the system requirements
- Reliability

Construction

- The system consists of:
- Pump
- Induction motor
- I-MAT Frequency converter
- Motor adapter for the motor mounting of the frequency converter
- Connection cable between frequency converter and induction motor
- Transducers

Main features

Rated motor power output from 0,75 kW to 7,5 kW
Control range from 1750 to 2900 rpm (2-pole)
Protection against dry running
Protection against operations with closed valve ports
Protection against system leakages
Protection against overcurrent in the motor
Protection agains overvoltage and undervoltage of the power supply
Protection against current unbalances between phases

Operating modes

Constant pressure mode
with pressure transducer
In this mode, the system maintains the preset pressure when the flow required by the installation changes.

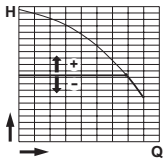

Proportional pressure mode
with pressure transducer
In this mode the system changes the working pressure according to the required flow rate.

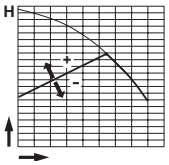

Constant flow mode
with flow meter
In this mode the system maintains a constant flow rate value in a point of the installation according to the required pressure.

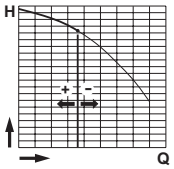

Fixed speed mode
with setting of the speed preferential rotation.
In this mode, by changing the working frequency, you may choose any operational curve included within the working range.

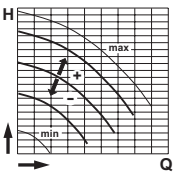

Constant temperature mode
with temperature transducer
In this mode the system keeps the temperature constant inside a system by changing the speed of the pump.

MXV-B

calpeda®

Coverage chart n ≈ 2900 rpm

Three-phase

					Q = Flow									
					m³/h	0	1	1,5	2	2,5	3	3,5	4	4,5
Model	230V	400V	P2		l/min		16,6	25	33,3	41,6	50	58,3	66,6	75
	A		kW	HP	H (m) = Total head									
MXV-B 25-303 O	4	2,3	0,75	1		34	32	30	28	26	23,5	20,5	17	12,5
MXV-B 25-304 O	4	2,3	0,75	1		44	42,5	40	37,5	34,5	31	27	22,5	17
MXV-B 25-305 O	4	2,3	0,75	1		56	53	50	47	43	39	34	28	21
MXV-B 25-306 O	4,6	2,7	1,1	1,5		68	63,5	60,5	56	51,5	46,5	40,5	34	25
MXV-B 25-307 O	4,6	2,7	1,1	1,5		79,5	74	70,5	65,5	60	54,5	47,5	39,5	30
MXV-B 25-308 O	7,5	4,3	1,5	2		91	85	80,5	75	69	62	54	45,5	34
MXV-B 25-310 O	7,5	4,3	1,5	2		114	106	101	94	86	78	68	57	42

Single-phase

					Q = Flow									
					m³/h	0	1	1,5	2	2,5	3	3,5	4	4,5
Model	230V	P2		P1	l/min		16,6	25	33,3	41,6	50	58,3	66,6	75
	A	kW	HP	kW	H (m) = Total head									
MXV-BM 25-303 O	5,8	0,75	1	1,01		34	32	30	28	26	23,5	20,5	17	12,5
MXV-BM 25-304 O	5,8	0,75	1	1,01		44	42,5	40	37,5	34,5	31	27	22,5	17
MXV-BM 25-305 O	5,8	0,75	1	1,01		56	53	50	47	43	39	34	28	21
MXV-BM 25-306 O	7,4	1,1	1,5	1,44		68	63,5	60,5	56	51,5	46,5	40,5	34	25
MXV-BM 25-307 O	7,4	1,1	1,5	1,44		79,5	74	70,5	65,5	60	54,5	47,5	39,5	30
MXV-BM 25-308 O	9,2	1,5	2	2		91	85	80,5	75	69	62	54	45,5	34
MXV-BM 25-310 O	9,2	1,5	2	2,3		114	106	101	94	86	78	68	57	42

Three-phase

					Q = Flow									
					m³/h	0	2,5	3	3,5	4	4,5	5	6	7	8
Model	230V	400V	P2		l/min		41,6	50	58,3	66,6	75	83,3	100	117	133
	A		kW	HP	H (m) = Total head										
MXV-B 32-503 O	4	2,3	0,75	1		34	31	30,5	29	28	26,5	25	21	17	11,5
MXV-B 32-504 O	4,6	2,7	1,1	1,5		45	41,5	40	38,5	36,5	34,5	32,5	27,5	22	14,5
MXV-B 32-505 O	4,6	2,7	1,1	1,5		56	51,5	50	48	46	43,5	41	34,5	27,5	18,5
MXV-B 32-506 O	7,5	4,3	1,5	2		68	62	60	58	55,5	52,5	49,5	42	33,5	22,5
MXV-B 32-507 O	7,5	4,3	1,5	2		79,5	72,5	70,5	68	65	61,5	58	49	39	26,5
MXV-B 32-508 O	9,2	5,3	2,2	3		91	83	80,5	78	74	70	66	56	44,5	30
MXV-B 32-510 O	9,2	5,3	2,2	3		114	104	101	97,5	93	88	83	70	56	38

Single-phase

					Q = Flow									
					m³/h	0	2,5	3	3,5	4	4,5	5	6	7	8
Model	230V	P2		P1	l/min		41,6	50	58,3	66,6	75	83,3	100	117	133
	A	kW	HP	kW	H (m) = Total head										
MXV-BM 32-503 O	5,8	0,75	1	1,01		34	31	30,5	29	28	26,5	25	21	17	11,5
MXV-BM 32-504 O	7,4	1,1	1,5	1,44		45	41,5	40	38,5	36,5	34,5	32,5	27,5	22	14,5
MXV-BM 32-505 O	7,4	1,1	1,5	1,44		56	51,5	50	48	46	43,5	41	34,5	27,5	18,5
MXV-BM 32-506 O	9,2	1,5	2	2		68	62	60	58	55,5	52,5	49,5	42	33,5	22,5
MXV-BM 32-507 O	9,2	1,5	2	2,3		79,5	72,5	70,5	68	65	61,5	58	49	39	26,5

MXV-B

calpeda®

Coverage chart n ≈ 2900 rpm

Three-phase

						Q = Flow										
						m³/h	0	5	6	7	8	9	10	11	12	13
Model	230V	400V	690V	P2		l/min		83,3	100	117	133	150	167	183	200	217
	A			kW	HP	H (m) = Total head										
MXV-B 40-903 O	4,6	2,7	-	1,1	1,5		35,5	32,5	31,5	31	29,5	28	25,5	22,5	19,5	15,5
MXV-B 40-904 O	7,5	4,3	-	1,5	2		47	43	42	41	40	37	34	30	26	21
MXV-B 40-905 O	9,2	5,3	-	2,2	3		59	54	53	51	50	47	43	38	32	26
MXV-B 40-906 O	9,2	5,3	-	2,2	3		71	65	63	62	59	56	51	45	39	31
MXV-B 40-907 O	11,5	6,6	-	3	4		83	76	74	72	69	66	60	53	45	36
MXV-B 40-908 O	11,5	6,6	-	3	4		95	87	85	82	79	75	69	60	51	42
MXV-B 40-910 O	-	9,6	5,5	3,7	5		119	109	106	103	99	94	86	75	64	52

Single-phase

					Q = Flow										
					m³/h	0	5	6	7	8	9	10	11	12	13
Model	230V	P2		P1	l/min		83,3	100	117	133	150	167	183	200	217
	A	kW	HP	kW	H (m) = Total head										
MXV-BM 40-903 O	7,4	1,1	1,5	1,44		35,5	32,5	31,5	31	29,5	28	25,5	22,5	19,5	15,5
MXV-BM 40-904 O	9,2	1,5	2	2,3		47	43	42	41	40	37	34	30	26	21

Three-phase

						Q = Flow										
						m³/h	0	8	10	12	14	16	18	20	22	24
Model	230V	400V	690V	P2		l/min		133	167	200	233	267	300	333	367	400
	A			kW	HP	H (m) = Total head										
MXV-B 50-1502 O	7,4	4,3	-	1,5	2		27,9	24,6	23,8	22,7	21,4	19,8	17,8	15,4	12,7	9,5
MXV-B 50-1503 O	9,2	5,3	-	2,2	3		43,6	39,1	37,3	35,8	34,3	31,3	28,2	24,8	19,7	14
MXV-B 50-1504 O	11,4	6,6	-	3	4		58	52,4	50,5	48,5	46,5	43,7	39,8	35,3	28,9	21,1
MXV-B 50-1505 O	-	9,6	5,5	4	5,5		72,5	65,5	63	60,5	57,5	54,7	49,7	44,1	36,1	26,3
MXV-B 50-1506 O	-	10,8	6,2	5,5	7,5		85	78	75,5	72	68	63	57,5	50,5	42,5	33,5
MXV-B 50-1507 O	-	10,8	6,2	5,5	7,5		99	91,5	88	84	79,5	73,5	67	59	49,5	39
MXV-B 50-1508 O	-	10,8	6,2	5,5	7,5		115	105	101	97	92	86	78	69	58	45
MXV-B 50-1509 O	-	14,3	8,3	7,5	10		129	118	114	110	104	97	88	77	65	51
MXV-B 50-1510 O	-	14,3	8,3	7,5	10		141	130	126	121	114	105	95	83	69	54

Test results with clean cold water, without gas content.
A safety margin of + 0.5 m is recommended for the NPSH value.
Tolerances according to UNI EN ISO 9906:2012
Head and power values valid for liquids with density ρ = 1,0 kg/dm3 and kinematic viscosity v = max 20 mm2/sec. Total head in m
P1: Maximum power input.
P2: Rated motor power output.
Pst: Power with reference to one stage.

MXV-B

Characteristic curves n ≈ 2900 rpm

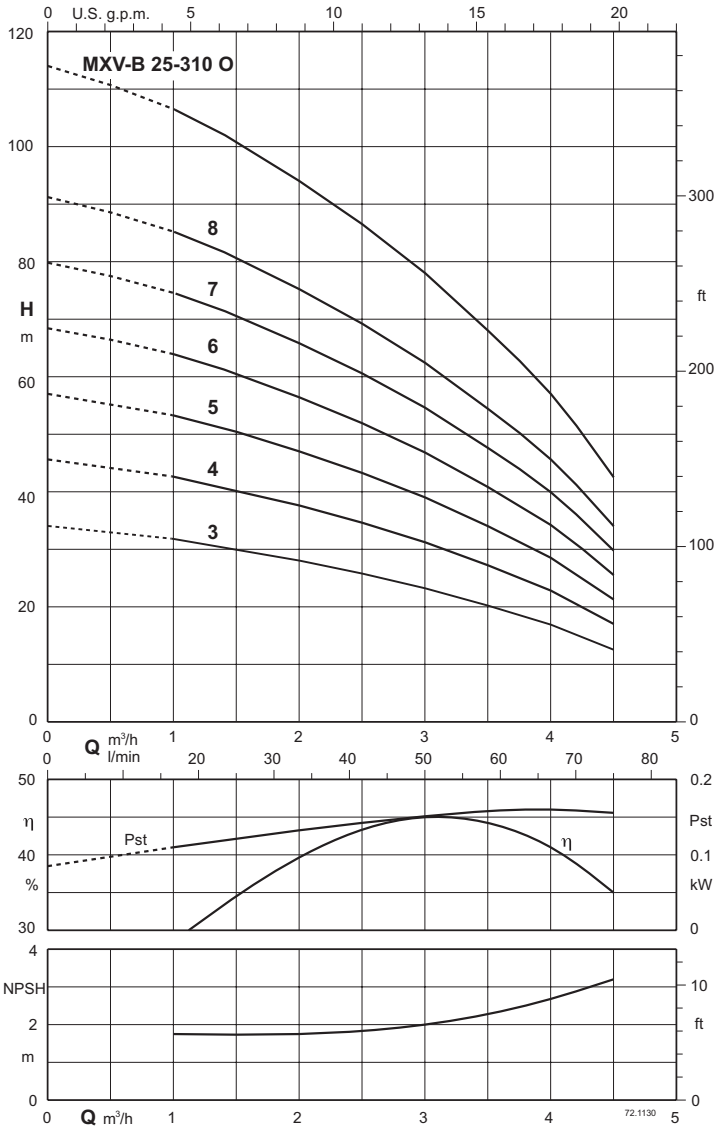

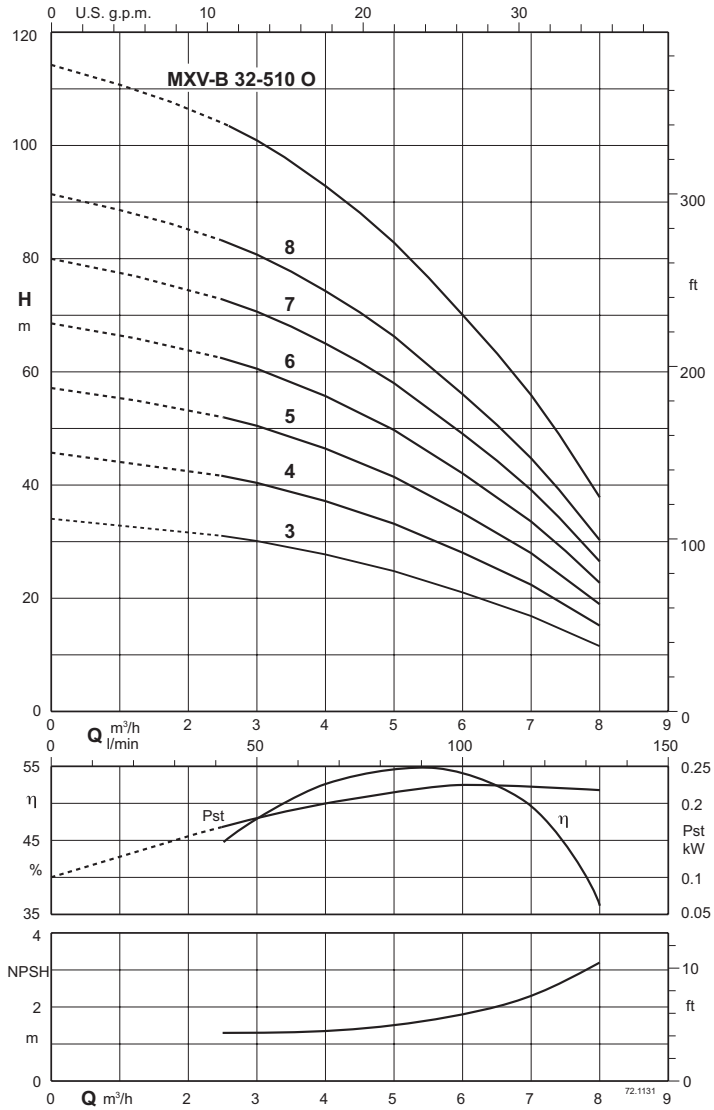

Test results with clean cold water, without gas content.
A safety margin of + 0.5 m is recommended for the NPSH value.
Tolerances in accordance with UNI EN ISO 9906:2012
Head and power values valid for liquids with density ρ = 1,0 kg/dm3 and kinematic viscosity ν = max 20 mm2/sec.
Pst = Power with reference to one stage.
A* Calpeda motor currents

MXV-B

Characteristic curves n ≈ 2900 rpm

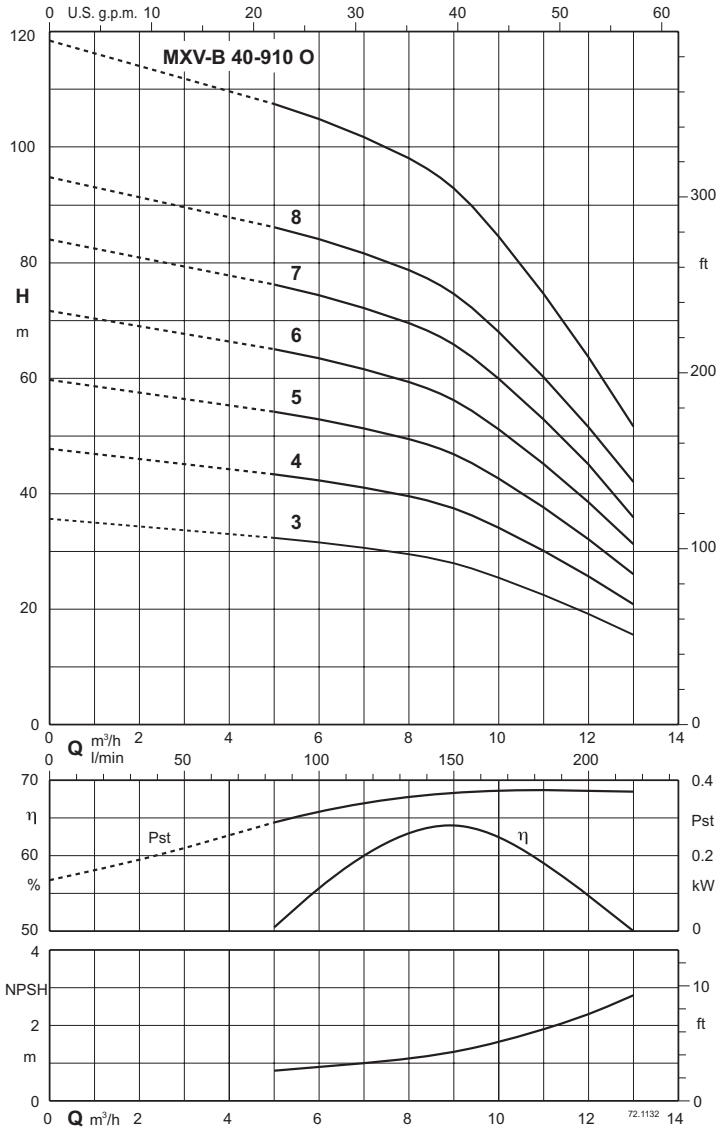

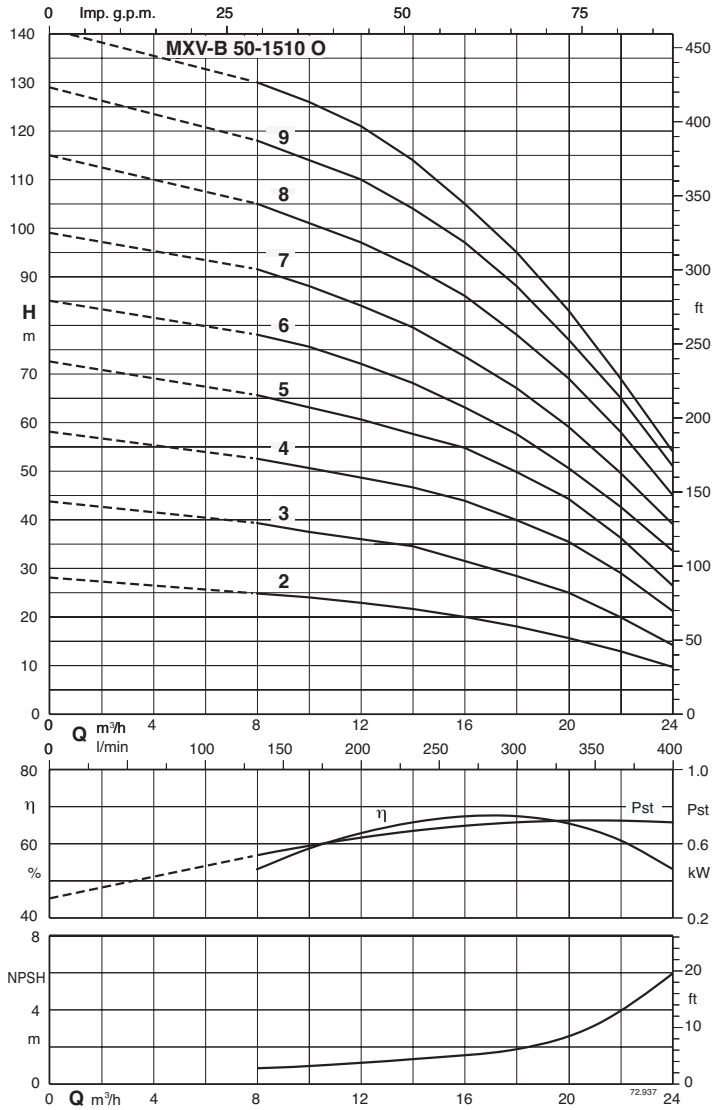

Test results with clean cold water, without gas content.
A safety margin of + 0.5 m is recommended for the NPSH value.
Tolerances in accordance with UNI EN ISO 9906:2012
Head and power values valid for liquids with density ρ = 1,0 kg/dm3 and kinematic viscosity ν = max 20 mm2/sec.
Pst = Power with reference to one stage.
A* Calpeda motor currents

MXV-B

calpeda

Dimensions and weights

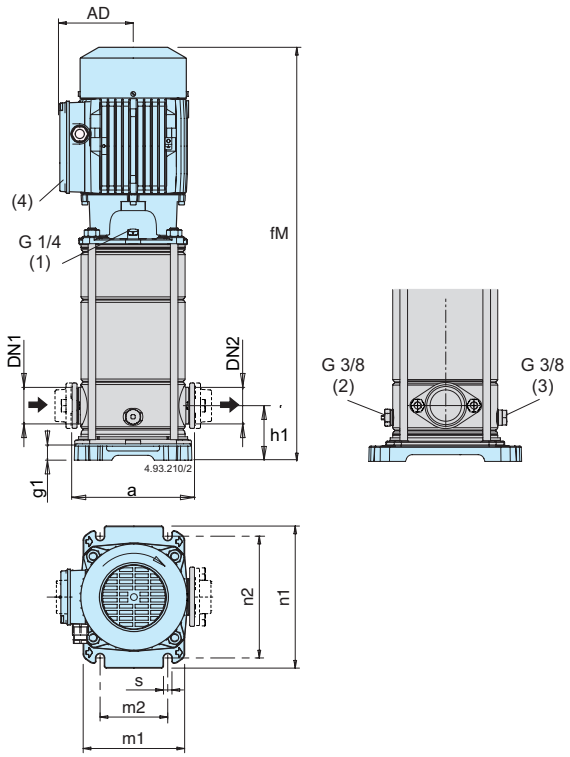

Oval Counterflanges PN 16

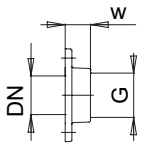

PN 16

DN	G	w	Fori N.	Fori Ø
25	1	23	2	12
32	1 1/4	23	2	12
40	1 1/2	26	2	15
50	2	34	2	15

Oval Flanges PN 16

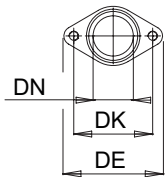

PN 16

DN	DE	DK	Fori N.	Fori Ø
25	95	75	2	M10
32	95	75	2	M10
40	125	100	2	M12
50	125	100	2	M12

(1) Filling | (2) Air vent suction side | (3) Draining | (4) Standard position of terminal box

TYPE			mm										kg
	DN1	DN2	a	AD	fM	g1	h1	m1	m2	n1	n2	s	Weight
MXV-B 25-303 O	25	25	160	128	553	20	50	165	100	205	180	13	22.6
MXV-B 25-304 O	25	25	160	128	553	20	50	165	100	205	180	13	22.8
MXV-B 25-305 O	25	25	160	128	577	20	50	165	100	205	180	13	23.5
MXV-B 25-306 O	25	25	160	128	601	20	50	165	100	205	180	13	26.3
MXV-B 25-307 O	25	25	160	128	625	20	50	165	100	205	180	13	26.9
MXV-B 25-308 O	25	25	160	128	649	20	50	165	100	205	180	13	29
MXV-B 25-310 O	25	25	160	128	697	20	50	165	100	205	180	13	30
MXV-B 32-503 O	32	32	160	128	553	20	50	165	100	205	180	13	22.5
MXV-B 32-504 O	32	32	160	128	553	20	50	165	100	205	180	13	24.8
MXV-B 32-505 O	32	32	160	128	577	20	50	165	100	205	180	13	25.5
MXV-B 32-506 O	32	32	160	128	601	20	50	165	100	205	180	13	27.7
MXV-B 32-507 O	32	32	160	128	625	20	50	165	100	205	180	13	28
MXV-B 32-508 O	32	32	160	128	689	20	50	165	100	205	180	13	32
MXV-B 32-510 O	32	32	160	128	737	20	50	165	100	205	180	13	33.4
MXV-B 40-903 O	40	40	200	128	601	30.5	80	190	130	250	215	14	28.5
MXV-B 40-904 O	40	40	200	128	601	30.5	80	190	130	250	215	14	30.5
MXV-B 40-905 O	40	40	200	128	631	30.5	80	190	130	250	215	14	34.3
MXV-B 40-906 O	40	40	200	128	701	30.5	80	190	130	250	215	14	35.2
MXV-B 40-907 O	40	40	200	138	755	30.5	80	190	130	250	215	14	42.5
MXV-B 40-908 O	40	40	200	138	789	30.5	80	190	130	250	215	14	43.3
MXV-B 40-910 O	40	40	200	138	849	30.5	80	190	130	250	215	14	48.3
MXV-B 50-1502 O	50	50	200	128	598	25	90	196	130	250	215	13	-
MXV-B 50-1503 O	50	50	200	128	686	25	90	196	130	250	215	13	37.5
MXV-B 50-1504 O	50	50	200	138	762	25	90	196	130	250	215	13	46.4
MXV-B 50-1505 O	50	50	200	138	810	25	90	196	130	250	215	13	50.8
MXV-B 50-1506 O	50	50	200	160	886	25	90	196	130	250	215	13	64.5
MXV-B 50-1507 O	50	50	200	160	934	25	90	196	130	250	215	13	65
MXV-B 50-1508 O	50	50	200	160	982	25	90	196	130	250	215	13	67
MXV-B 50-1509 O	50	50	200	160	1030	25	90	196	130	250	215	13	74
MXV-B 50-1510 O	50	50	200	160	1079	25	90	196	130	250	215	13	-

MXV-B

Dimensions and weights

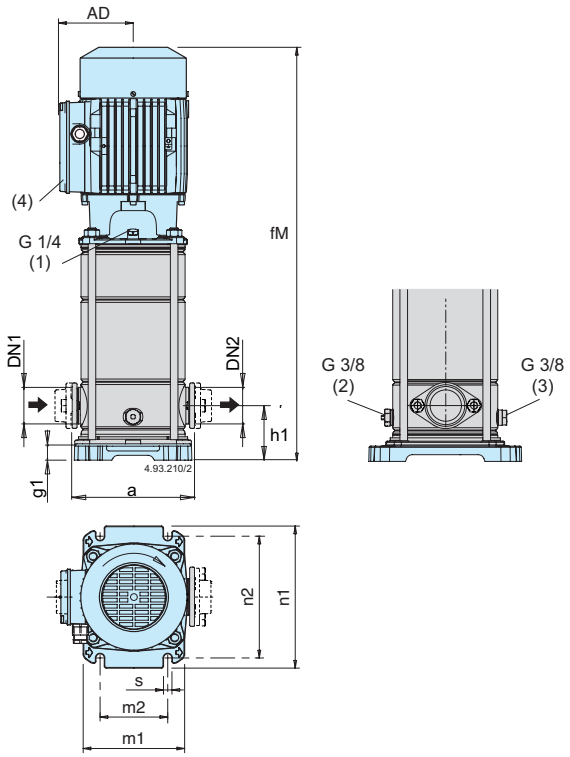

Oval Counterflanges PN 16

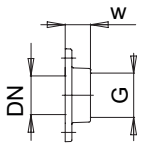

PN 16

DN	G	w	Fori N.	Fori Ø
25	1	23	2	12
32	1 1/4	23	2	12
40	1 1/2	26	2	15
50	2	34	2	15

Oval Flanges PN 16

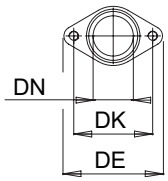

PN 16

DN	DE	DK	Fori N.	Fori Ø
25	95	75	2	M10
32	95	75	2	M10
40	125	100	2	M12
50	125	100	2	M12

(1) Filling | (2) Air vent suction side | (3) Draining | (4) Standard position of terminal box

TYPE			mm										kg
	DN1	DN2	a	AD	fM	g1	h1	m1	m2	n1	n2	s	Weight
MXV-BM 25-303 O	25	25	160	128	553	20	50	165	100	205	180	13	24.1
MXV-BM 25-304 O	25	25	160	128	553	20	50	165	100	205	180	13	-
MXV-BM 25-305 O	25	25	160	128	577	20	50	165	100	205	180	13	25.2
MXV-BM 25-306 O	25	25	160	128	601	20	50	165	100	205	180	13	27.4
MXV-BM 25-307 O	25	25	160	128	625	20	50	165	100	205	180	13	27.4
MXV-BM 25-308 O	25	25	160	128	649	20	50	165	100	205	180	13	29
MXV-BM 25-310 O	25	25	160	128	697	20	50	165	100	205	180	13	29.8
MXV-BM 32-503 O	32	32	160	128	553	20	50	165	100	205	180	13	26.4
MXV-BM 32-504 O	32	32	160	128	553	20	50	165	100	205	180	13	-
MXV-BM 32-505 O	32	32	160	128	577	20	50	165	100	205	180	13	26.7
MXV-BM 32-506 O	32	32	160	128	601	20	50	165	100	205	180	13	27.6
MXV-BM 32-507 O	32	32	160	128	625	20	50	165	100	205	180	13	27.7
MXV-BM 40-903 O	40	40	200	128	601	30.5	80	190	130	250	215	14	28.9
MXV-BM 40-904 O	40	40	200	128	601	30.5	80	190	130	250	215	14	30.3

MXV-B

Dimensions and weights

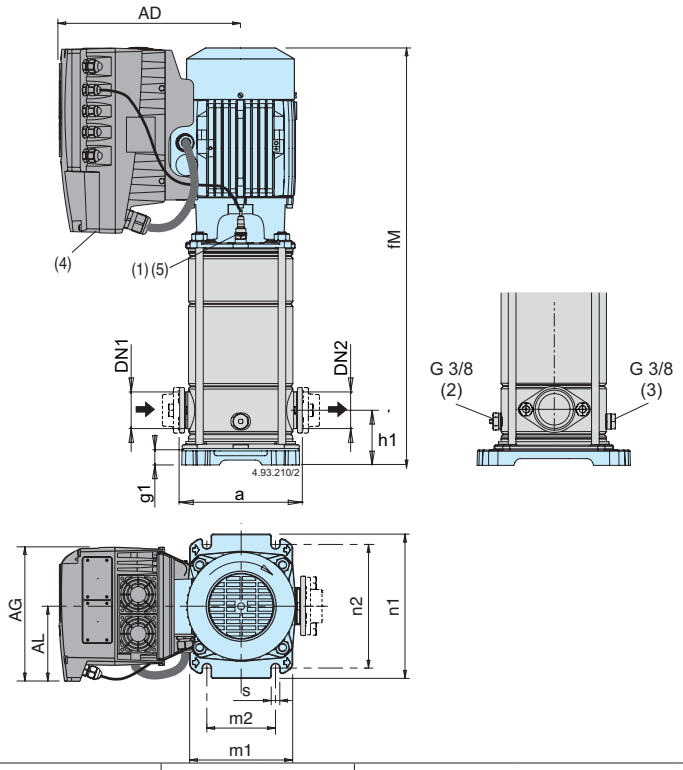

Oval Counterflanges PN 16

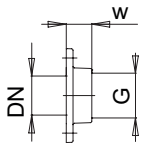

PN 16

DN	G	w	Fori N.	Fori Ø
25	1	23	2	12
32	1 1/4	23	2	12
40	1 1/2	26	2	15
50	2	34	2	15

Oval Flanges PN 16

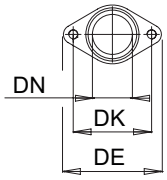

PN 16

DN	DE	DK	Fori N.	Fori Ø
25	95	75	2	M10
32	95	75	2	M10
40	125	100	2	M12
50	125	100	2	M12

(1) Filling | (2) Air vent suction side | (3) Draining | (4) Standard position of I-MAT

TYPE			mm												kg
	DN1	DN2	a	AD	AG	AL	fM	g1	h1	m1	m2	n1	n2	s	Weight
MXV-B EI 25-303 O	25	25	160	286	190	105	553	20	50	165	100	205	180	13	-
MXV-B EI 25-304 O	25	25	160	286	190	105	553	20	50	165	100	205	180	13	29.6
MXV-B EI 25-305 O	25	25	160	286	190	105	577	20	50	165	100	205	180	13	29.2
MXV-B EI 25-306 O	25	25	160	286	190	105	601	20	50	165	100	205	180	13	-
MXV-B EI 25-307 O	25	25	160	286	190	105	625	20	50	165	100	205	180	13	32.4
MXV-B EI 25-308 O	25	25	160	286	190	105	649	20	50	165	100	205	180	13	-
MXV-B EI 25-310 O	25	25	160	286	190	105	697	20	50	165	100	205	180	13	36.6
MXV-B EI 32-503 O	32	32	160	286	190	105	553	20	50	165	100	205	180	13	-
MXV-B EI 32-504 O	32	32	160	286	190	105	553	20	50	165	100	205	180	13	25.3
MXV-B EI 32-505 O	32	32	160	286	190	105	577	20	50	165	100	205	180	13	-
MXV-B EI 32-506 O	32	32	160	286	190	105	601	20	50	165	100	205	180	13	36
MXV-B EI 32-507 O	32	32	160	286	190	105	625	20	50	165	100	205	180	13	35.2
MXV-B EI 32-508 O	32	32	160	294	210	118	689	20	50	165	100	205	180	13	43
MXV-B EI 32-510 O	32	32	160	294	210	118	737	20	50	165	100	205	180	13	43.8
MXV-B EI 40-903 O	40	40	200	286	190	105	601	30.5	80	190	130	250	215	14	-
MXV-B EI 40-904 O	40	40	200	286	190	105	601	30.5	80	190	130	250	215	14	-
MXV-B EI 40-905 O	40	40	200	294	210	118	631	30.5	80	190	130	250	215	14	40.4
MXV-B EI 40-906 O	40	40	200	294	210	118	701	30.5	80	190	130	250	215	14	41
MXV-B EI 40-907 O	40	40	200	294	210	118	755	30.5	80	190	130	250	215	14	-
MXV-B EI 40-908 O	40	40	200	294	210	118	789	30.5	80	190	130	250	215	14	42.4
MXV-B EI 40-910 O	40	40	200	294	210	118	849	30.5	80	190	130	250	215	14	54.5
MXV-B EI 50-1502 O	50	50	200	286	190	105	598	25	90	196	130	250	215	13	-
MXV-B EI 50-1503 O	50	50	200	286	210	118	686	25	90	196	130	250	215	13	-
MXV-B EI 50-1504 O	50	50	200	294	210	118	762	25	90	196	130	250	215	13	-
MXV-B EI 50-1505 O	50	50	200	294	210	118	810	25	90	196	130	250	215	13	-
MXV-B EI 50-1506 O	50	50	200	321	210	118	886	25	90	196	130	250	215	13	-
MXV-B EI 50-1507 O	50	50	200	321	210	118	934	25	90	196	130	250	215	13	-
MXV-B EI 50-1508 O	50	50	200	321	210	118	982	25	90	196	130	250	215	13	-
MXV-B EI 50-1509 O	50	50	200	364	281	153	1030	25	90	196	130	250	215	13	-
MXV-B EI 50-1510 O	50	50	200	364	281	153	1079	25	90	196	130	250	215	13	-