SIEMENS

Safety

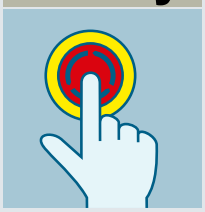

Function Manual

# SINAMICS

## SINAMICS G120, G120C, G120D, G110M, SIMATIC ET 200pro FC-2 inverters

Safety functions integrated in the drive - Safety Integrated

Edition 04/2018

www.siemens.com/drives

SIEMENS

# SINAMICS

# SINAMICS G120 Safety Integrated - SINAMICS G110M, G120, G120C, G120D and SIMATIC ET 200pro FC-2

Function Manual


Changes in the current edition

Fundamental safety instructions 1

Introduction 2

Description 3

Installing 4

Commissioning 5

Operation 6

Corrective maintenance 7

System properties 8

Appendix A



Edition 04/2018, firmware V4.7 SP10

04/2018, FW V4.7 SP10
A5E34261271B AF

## Legal information

### Warning notice system

This manual contains notices you have to observe in order to ensure your personal safety, as well as to prevent damage to property. The notices referring to your personal safety are highlighted in the manual by a safety alert symbol, notices referring only to property damage have no safety alert symbol. These notices shown below are graded according to the degree of danger.

| ⚠ DANGER |
| --- |
| indicates that death or severe personal injury **will** result if proper precautions are not taken. |

| ⚠ WARNING |
| --- |
| indicates that death or severe personal injury **may** result if proper precautions are not taken. |

| ⚠ CAUTION |
| --- |
| indicates that minor personal injury can result if proper precautions are not taken. |

| NOTICE |
| --- |
| indicates that property damage can result if proper precautions are not taken. |

If more than one degree of danger is present, the warning notice representing the highest degree of danger will be used. A notice warning of injury to persons with a safety alert symbol may also include a warning relating to property damage.

### Qualified Personnel

The product/system described in this documentation may be operated only by **personnel qualified** for the specific task in accordance with the relevant documentation, in particular its warning notices and safety instructions. Qualified personnel are those who, based on their training and experience, are capable of identifying risks and avoiding potential hazards when working with these products/systems.

### Proper use of Siemens products

Note the following:

| ⚠ WARNING |
| --- |
| Siemens products may only be used for the applications described in the catalog and in the relevant technical documentation. If products and components from other manufacturers are used, these must be recommended or approved by Siemens. Proper transport, storage, installation, assembly, commissioning, operation and maintenance are required to ensure that the products operate safely and without any problems. The permissible ambient conditions must be complied with. The information in the relevant documentation must be observed. |

### Trademarks

All names identified by ® are registered trademarks of Siemens AG. The remaining trademarks in this publication may be trademarks whose use by third parties for their own purposes could violate the rights of the owner.

### Disclaimer of Liability

We have reviewed the contents of this publication to ensure consistency with the hardware and software described. Since variance cannot be precluded entirely, we cannot guarantee full consistency. However, the information in this publication is reviewed regularly and any necessary corrections are included in subsequent editions.

Siemens AG
Division Digital Factory
Postfach 48 48
90026 NÜRNBERG
GERMANY

A5E34261271B AF
℗ 04/2018 Subject to change

Copyright © Siemens AG 2010 - 2018.
All rights reserved

# Changes in the current edition

## Essential changes with respect to Function Manual, Edition 09/2017

### Revised descriptions

- Only commissioning using the Startdrive PC-based tool is described. Commissioning with STARTER has been removed.
  Commissioning (Page 99)
  You can find information on commissioning the safety functions with STARTER on the Internet:
  "Safety Integrated" Function Manual, Edition 09/2017 (https://support.industry.siemens.com/cs/ww/en/view/109751320)

# Table of contents


Changes in the current edition....3

1 Fundamental safety instructions....11

1.1 General safety instructions....11

1.2 Warranty and liability for application examples....12

1.3 Industrial security....13

2 Introduction....15

2.1 About this manual....15

2.2 Navigator through the "Safety Integrated" Function Manual....18

3 Description....21

3.1 About this chapter....21

3.2 Basic functions and extended functions....22

3.3 Interfaces to select the safety functions....24

3.4 Preconditions when using the safety functions....26

3.5 Restrictions when using safety functions....27

3.6 Recommendations for stable operation....30

3.7 An overview of the principle of operation of the safety functions....31
3.7.1 Safe Torque Off (STO)....31
3.7.2 Safe Brake Control (SBC)....34
3.7.3 Safe Stop 1 (SS1)....36
3.7.4 Safely Limited Speed (SLS)....39
3.7.5 Safe Direction (SDI)....42
3.7.6 Safe Speed Monitoring (SSM)....44

4 Installing....45

4.1 About this chapter....45

4.2 Sequence when installing an inverter with safety functions....46

4.3 Connection via PROFIsafe....47
4.3.1 Overview of PROFIsafe connections....47
4.3.2 PROFIsafe telegrams....51
4.3.3 Control word 1 and status word 1 (basic functions)....52
4.3.4 Control word 1 and status word 1 (extended functions)....53
4.3.5 Control word 5 and status word 5....54
4.3.6 Application examples....56

4.4 Controlling via a fail-safe digital input....58
4.4.1 Overview....58
4.4.2 Wiring examples according to SIL 2 and PL d....62
4.4.2.1 Electromechanical sensor....63

4.4.2.2 Series-connected electromechanical sensors....66
4.4.2.3 Controlling several inverters in parallel using electromechanical sensors....68
4.4.2.4 SIRIUS 3SK1 safety relay....70
4.4.2.5 3RK3 Modular Safety System....72
4.4.2.6 Sensors with OSSD outputs....74
4.4.2.7 SIMATIC I/O modules....76
4.4.3 Wiring examples according to SIL 3 and PL e....82
4.4.3.1 Electromechanical sensor....83
4.4.3.2 SIRIUS 3SK1 safety relay....86
4.4.3.3 3RK3 Modular Safety System....88
4.4.3.4 SIMATIC I/O modules....90

4.5 Evaluating via a fail-safe digital output....93
4.5.1 Overview....93
4.5.2 Connecting the fail-safe digital output for a SINAMICS G120....94
4.5.3 Connecting the fail-safe digital output for a SINAMICS G120D....96

4.6 Connecting a motor holding brake via Safe Brake Relay....97
4.6.1 Connecting a Brake Relay at the PM240-2 and at the PM240P-2 Power Modules....97
4.6.2 Connecting a Brake Relay at a PM250 Power Module....98

**5 Commissioning....99**

5.1 About this chapter....99

5.2 Commissioning guidelines....100

5.3 Configure PROFIsafe in the higher-level control system....101

5.4 Commissioning tools....102

5.5 Safety functions password....103

5.6 Resetting the safety functions to the factory setting....104

5.7 Resetting the password for the safety functions....106

5.8 Selecting configuration of the safety functions....107

5.9 Configuring the safety functions and PROFIsafe....109
5.9.1 Configuring safety functions....109
5.9.2 Configuring PROFIsafe....111
5.9.3 Activate settings....113

5.10 Setting basic functions....115
5.10.1 Interconnecting the "STO active" signal....115
5.10.2 Setting the filter for fail-safe digital inputs....116
5.10.3 Setting the forced checking procedure (test stop)....119
5.10.4 Setting STO via Power Module terminals....120
5.10.5 Setting the delay time for SS1....122
5.10.6 Enabling SBC....123
5.10.7 Finalizing online commissioning....124

5.11 Setting extended functions....127
5.11.1 Basic settings....127
5.11.1.1 Enabling the safety functions....127
5.11.1.2 Setting the forced checking procedure (test stop)....129
5.11.1.3 Setting encoderless actual value sensing....131
5.11.2 Setting fail-safe digital inputs....133

5.11.2.1 Interconnecting a safety function with fail-safe digital input....133
5.11.2.2 Setting the filter for fail-safe digital inputs....135
5.11.2.3 Interconnecting the signal for fail-safe acknowledgment....138
5.11.3 Setting STO via Power Module terminals....139
5.11.4 Setting a fail-safe digital output....140
5.11.4.1 Setting the forced dormant error detection (test stop)....140
5.11.4.2 Output signal and setting the test mode....142
5.11.5 Setting SS1....146
5.11.5.1 Setting SS1 with braking ramp monitoring....147
5.11.5.2 Setting SS1 with acceleration monitoring....150
5.11.6 Setting SLS....152
5.11.6.1 Setting the monitoring functions....152
5.11.6.2 Settings for acceptance test....155
5.11.7 Setting SSM....156
5.11.8 Setting SDI....159
5.11.8.1 Setting the monitoring functions....159
5.11.8.2 Settings for acceptance test....163
5.11.9 Final steps when commissioning online....163

5.12 Activating Shared Device....167

5.13 Starting communication via PROFIsafe....168

5.14 Commissioning with Startdrive offline....169

5.15 Series commissioning....170

5.16 Acceptance tests for the safety functions....171
5.16.1 Acceptance - completion of commissioning....171
5.16.2 Reduced acceptance test after expanding the function....173

**6 Operation....175**

6.1 About this chapter....175

6.2 Regularly testing the safety functions....176
6.2.1 Overview....176
6.2.2 Testing fail-safe digital inputs....177
6.2.3 Testing the basic functions....178
6.2.4 Testing the extended functions....180
6.2.5 Testing a fail-safe digital output....182

6.3 Safe Torque Off (STO)....185
6.3.1 Overview....185
6.3.2 Selecting and deselecting STO when the motor is switched on....186
6.3.3 Response to a discrepancy when STO is active....188

6.4 Safe Brake Control (SBC)....194
6.4.1 Selecting and deselecting SBC when the motor is switched on....194
6.4.2 Response to faults in the brake control....197

6.5 Safe Stop 1 (SS1)....198
6.5.1 Overview....198
6.5.2 Selecting and deselecting SS1 when the motor is switched on....199
6.5.2.1 SS1 basic function....199
6.5.2.2 Extended function SS1 with acceleration monitoring....201
6.5.2.3 Extended function SS1 with acceleration monitoring....203
6.5.3 Switching off the motor when SS1 is active....205

6.5.4 Response to a discrepancy when SS1 is active....207
6.5.5 Limit value violation when SS1 is active....212

6.6 Safely Limited Speed (SLS)....214
6.6.1 Overview....214
6.6.2 Selecting and deselecting SLS when the motor is switched on....214
6.6.2.1 SLS with braking ramp monitoring....217
6.6.2.2 SLS without braking ramp monitoring....219
6.6.3 Switching over SLS levels....221
6.6.3.1 SLS with braking ramp monitoring....222
6.6.3.2 SLS without braking ramp monitoring....224
6.6.4 Switching off the motor when SLS is active....225
6.6.5 Switching on the motor when SLS is active....227
6.6.6 Response to a discrepancy when SLS is active....229
6.6.7 Limit value violation when SLS is active....231

6.7 Safe Speed Monitor (SSM)....233
6.7.1 Overview....233
6.7.2 Selecting SSM when the motor is switched on....234
6.7.3 Switching off the motor when SSM is active....235
6.7.4 Switching on the motor when SSM is active....239

6.8 Safe Direction (SDI)....242
6.8.1 Overview....242
6.8.2 Selecting and deselecting SDI when the motor is switched on....243
6.8.3 Switching off the motor when SDI is active....244
6.8.4 Switching on the motor when SDI is active....246
6.8.5 Response to a discrepancy when Safe Direction is active (SDI)....249
6.8.6 Limit value violation when Safe Direction (SDI) is active....251

6.9 Response to a discrepancy in the signals transferred via PROFIsafe....253

6.10 Stop responses....255
6.10.1 Example 1: Internal event with STO active....257
6.10.2 Example 2: Internal event with SSM active....258

6.11 Fail-safe acknowledgment....260
6.11.1 Acknowledging using a fail-safe signal....260
6.11.2 Response to a discrepancy of the fail-safe acknowledge signal....262

6.12 Selecting safety function when a safety function is active....263
6.12.1 Selecting STO when SS1 is active....264
6.12.2 Selecting STO when SLS is active....265
6.12.3 Selecting STO when SDI is active....266
6.12.4 Selecting STO when SSM is active....267
6.12.5 Selecting SS1 when SLS is active....269
6.12.6 Selecting SS1 when SDI is active....270
6.12.7 Selecting SS1 when SSM is active....271
6.12.8 Selecting SLS when SDI is active....273
6.12.9 Selecting SLS when SSM is active....274
6.12.10 Selecting SDI when SLS is active....275
6.12.11 Selecting SDI when SSM is active....276

6.13 Overview of the inverter signals relevant for operation....277

6.14 List of alarms and faults....279

7 Corrective maintenance....291

7.1 About this chapter....291

7.2 Maintaining operational safety....292

7.3 Replacing components of the SINAMICS G120 or G120D inverters....293
7.3.1 Overview of replacing converter components....294
7.3.2 Replacing a Control Unit with enabled safety function....296
7.3.3 Replacing the Control Unit without data backup....299
7.3.4 Replacing a Power Module with enabled safety function....300

7.4 Replacing the SINAMICS G120C converter....301
7.4.1 Overview of how to replace an inverter....302
7.4.2 Replacing a converter with enabled safety function....304
7.4.3 Replacing a converter without data backup....308

7.5 Replacing components of the SINAMICS G110M inverters....309
7.5.1 Overview of replacing converter components....310
7.5.2 Replacing a Control Unit with enabled safety function....312
7.5.3 Replacing the Control Unit without data backup....316
7.5.4 Replacing a Power Module with enabled safety function....317

7.6 Replacing the SIMATIC ET 200pro FC-2 inverter....318
7.6.1 Overview of how to replace an inverter....318
7.6.2 Replacing a converter with enabled safety function....319
7.6.3 Replacing a converter without data backup....322

7.7 Reduced acceptance after a component has been replaced and a firmware change....323

8 System properties....325

8.1 About this chapter....325

8.2 Probability of failure of the safety functions (PFH value)....326

8.3 Certification....328

8.4 Safe Brake Relay....330

8.5 Response times after selection....331
8.5.1 General information....331
8.5.2 Safe Torque Off (STO) and Safe Brake Control (SBC)....332
8.5.3 Safe Stop 1 (SS1) and Safe Brake Control (SBC)....334

8.6 Response times when a monitoring function responds....337

A Appendix....339

A.1 About this chapter....339

A.2 Examples of acceptance tests....340
A.2.1 Acceptance test STO (basic functions)....341
A.2.2 Acceptance test STO (extended functions)....343
A.2.3 SS1 acceptance test (basic functions)....345
A.2.4 SS1 acceptance test (extended functions)....347
A.2.5 SBC acceptance test....350
A.2.6 Acceptance test SLS....352
A.2.7 SSM acceptance test....356
A.2.8 Acceptance test SDI....360

A.2.9 Acceptance test for F-DI status in PROFIsafe telegram 900....369

A.3 Example of the machine documentation of an acceptance test....370

A.4 Standards and specifications....372
A.4.1 General information....372
A.4.1.1 Aims....372
A.4.1.2 Functional safety....372
A.4.2 Safety of machinery in Europe....373
A.4.2.1 Machinery Directive....373
A.4.2.2 Harmonized European Standards....374
A.4.2.3 Standards for implementing safety-related controllers....375
A.4.2.4 DIN EN ISO 13849-1....376
A.4.2.5 EN 62061....377
A.4.2.6 Series of standards IEC 61508 (VDE 0803)....379
A.4.2.7 Risk analysis/assessment....379
A.4.2.8 Risk reduction....381
A.4.2.9 Residual risk....381
A.4.2.10 EC declaration of conformity....381
A.4.3 Machine safety in the USA....381
A.4.3.1 Minimum requirements of the OSHA....382
A.4.3.2 NRTL listing....382
A.4.3.3 NFPA 79....382
A.4.3.4 ANSI B11....383
A.4.4 Machine safety in Japan....383
A.4.5 Equipment regulations....385
A.4.6 Other safety-related issues....385
A.4.6.1 Information sheets issued by the Employer's Liability Insurance Association....385
A.4.6.2 Additional references....385

A.5 Manuals and technical support....386
A.5.1 Overview of the manuals....386
A.5.2 Configuring support....389
A.5.3 Product Support....391

**Index....393**

# Fundamental safety instructions 1

## 1.1 General safety instructions

**WARNING**

**Danger to life if the safety instructions and residual risks are not observed**

If the safety instructions and residual risks in the associated hardware documentation are not observed, accidents involving severe injuries or death can occur.

- Observe the safety instructions given in the hardware documentation.
- Consider the residual risks for the risk evaluation.

**WARNING**

**Malfunctions of the machine as a result of incorrect or changed parameter settings**

As a result of incorrect or changed parameterization, machines can malfunction, which in turn can lead to injuries or death.

- Protect the parameterization (parameter assignments) against unauthorized access.
- Handle possible malfunctions by taking suitable measures, e.g. emergency stop or emergency off.

## 1.2 Warranty and liability for application examples

Application examples are not binding and do not claim to be complete regarding configuration, equipment or any eventuality which may arise. Application examples do not represent specific customer solutions, but are only intended to provide support for typical tasks.

As the user you yourself are responsible for ensuring that the products described are operated correctly. Application examples do not relieve you of your responsibility for safe handling when using, installing, operating and maintaining the equipment.

## 1.3 Industrial security

**Note**

**Industrial security**

Siemens provides products and solutions with industrial security functions that support the secure operation of plants, systems, machines and networks.

In order to protect plants, systems, machines and networks against cyber threats, it is necessary to implement – and continuously maintain – a holistic, state-of-the-art industrial security concept. Siemens' products and solutions constitute one element of such a concept.

Customers are responsible for preventing unauthorized access to their plants, systems, machines and networks. Such systems, machines and components should only be connected to an enterprise network or the Internet if and to the extent such a connection is necessary and only when appropriate security measures (e.g. firewalls and/or network segmentation) are in place.

For additional information on industrial security measures that may be implemented, please visit:

Industrial security (http://www.siemens.com/industrialsecurity)

Siemens' products and solutions undergo continuous development to make them more secure. Siemens strongly recommends that product updates are applied as soon as they are available and that the latest product versions are used. Use of product versions that are no longer supported, and failure to apply the latest updates may increase customer's exposure to cyber threats.

To stay informed about product updates, subscribe to the Siemens Industrial Security RSS Feed at:

Industrial security (http://www.siemens.com/industrialsecurity)

Further information is provided on the Internet:

Industrial Security Configuration Manual (https://support.industry.siemens.com/cs/ww/en/view/108862708)

**WARNING**

**Unsafe operating states resulting from software manipulation**

Software manipulations (e.g. viruses, trojans, malware or worms) can cause unsafe operating states in your system that may lead to death, serious injury, and property damage.

- Keep the software up to date.
- Incorporate the automation and drive components into a holistic, state-of-the-art industrial security concept for the installation or machine.
- Make sure that you include all installed products into the holistic industrial security concept.
- Protect files stored on exchangeable storage media from malicious software by with suitable protection measures, e.g. virus scanners.
- Protect the drive against unauthorized changes by activating the "know-how protection" drive function.

# Introduction 2

## 2.1 About this manual

### Who requires the "Safety Integrated" function manual?

The "Safety Integrated" Function Manual describes safety functions integrated in the drive inverter for variable-speed applications.

The "Safety Integrated" Function Manual primarily addresses machine manufacturers (OEMs), plant construction companies, commissioning engineers and service personnel.

### What does "safety function integrated in the drive" mean?

Compared to a "standard" drive function, a safety function is significantly less subject to error. Performance level (PL) and safety integrity level (SIL) of the corresponding standards are a measure of the error rate.

A safety function is therefore suitable for use in machines or systems with a particularly high risk potential. The system or machine builder carries out a risk analysis to assess the risk potential of his/her machine or system.

"Integrated in the drive" means that the safety function is integrated in the inverter and requires no additional external components.

## What inverters are described?

| | Applications with fixed speed | | Applications with variable speed | | | | | | | | | | | |
|---|---|---|---|---|---|---|---|---|---|---|---|---|---|---|
| | SIMATIC | | | | | | | SINAMICS | | | | | | |
| | ET 200S Motor starter | ET 200pro Motor starter | ET 200pro FC-2 | G110M | G120C | G120D | G120 | G110D | G130 | G150 | S110 | S120 | S150 | S210 |
| **Integrated safety functions according to IEC 61800-5-2** | | | | | | | | | | | | | | |
| STO<br>Safe Torque Off | Yes | | Yes | | | | | Yes | Yes | | Yes | | | Yes |
| SS1<br>Safe Stop 1 | - | - | - | - | - | Yes | | - | Yes | | Yes | | | Yes |
| SBC<br>Safe Brake Control | - | - | - | - | - | - | Yes [2] | - | Yes [3] | | Yes [4] | Yes [3] | | Yes |
| SLS<br>Safely-Limited Speed | - | - | - | - | - | Yes | | - | Yes | | Yes | | | - |
| SSM<br>Safe Speed Monitor | - | - | - | - | - | Yes | | - | Yes | | Yes | | | - |
| SDI<br>Safe Direction | - | - | - | - | - | Yes | | - | Yes | | Yes | | | - |
| SOS<br>Safe Operating Stop | - | - | - | - | - | - | - | - | Yes | | Yes | | | - |
| SS2<br>Safe Stop 2 | - | - | - | - | - | - | - | - | Yes | | Yes | | | - |
| SLP<br>Safely-Limited Position | - | - | - | - | - | - | - | - | Yes | | - | Yes | | - |
| SCA<br>Safe Cam | - | - | - | - | - | - | - | - | Yes | | - | Yes | | - |
| SLA<br>Safely-Limited Acceleration | - | - | - | - | - | - | - | - | Yes | | - | Yes | | - |
| **Safety functions.** | | | | | | | | | | | | | | |
| SP<br>Safe Position | - | - | - | - | - | - | - | - | - | | - | Yes | | - |
| **Diagnostic functions** | | | | | | | | | | | | | | |
| SBT<br>Safe Brake Test | - | - | - | - | - | - | - | - | Yes | | - | Yes | | - |
| **Fail-safe interfaces** | | | | | | | | | | | | | | |
| PROFIsafe über PROFINET/PROFIBUS | Yes | Yes [5] | Yes [5] | Yes | | | | - | Yes | | Yes | | | Yes |
| Fail-safe digital inputs | Yes [5] | | Yes [5] | Yes | | | | - Yes [5] | Yes | | Yes, external components required in certain cases | | | Yes |
| Fail-safe digital outputs | - | - | - | - | - | Yes | Yes [8] | - | Yes, with TM54F | | Yes | Yes, with TM54F | | - |
| **Certifications** | | | | | | | | | | | | | | |
| EN ISO 13849-1:2006 | Cat. 4 / PL e | | Cat. 3 / PL d | | | | Cat. 3 / PL d/e [7] | - | Cat. 3 / PL d [6] | | Cat. 3 / PL d [6] | | | |
| EN 61508: 2010 | SIL 3 | | SIL 2 | | | | SIL 2/3 [7] | - | SIL 2 [6] | | SIL 2 [6] | | | |
| NFPA 79 | Yes | | - | - | - | - | - | - | - | | Yes | | - | - |
| NRTL listed | Yes | | - | - | - | - | - | - | - | | - | Yes [1] | - | - |

Content of the "Safety Integrated" Function Manual

1) Only for SINAMICS S120 Booksize

2) Only for CU250S-2 Control Units with Safe Brake Relay

3) For chassis and cabinet modules with Safe Brake Adapter

4) With Safe Brake Relay

5) With external components

6) SBT: Cat 2 / PL d, SIL 1

7) STO via the terminals of the PM240-2 and PM240P-2 Power Modules: Cat 3 / PL e, SIL 3
STO via the Control Unit terminals and all other safety functions: Cat. 3 / PL d, SIL 2

8) Only with CU250S-2 Control Units

Figure 2-1 Products with drive-integrated safety functions

## What applications are described?

The "Safety Integrated" Function Manual provides information, procedures and operator actions for the following situations:

- Introductory and simplified description of the inverter safety functions
- Controlling safety functions via fail-safe digital inputs or PROFIsafe
- Commissioning and acceptance test of the safety functions
- Response of the inverter with active safety functions
- Replacing an inverter where the safety functions are enabled.
- Diagnostics of the safety functions

The appendix contains an overview of the applicable regulations and standards for using the safety functions.

## What other information do you need?

The "Safety Integrated" Function Manual is not sufficient when installing or commissioning "Standard" inverter functions. An overview of the documentation available and the associated applications.

Overview of the manuals (Page 386)

## What is the meaning of the symbols in the manual?

Reference to further information in the manual

Download from the Internet

DVD that can be ordered

End of a handling instruction.
❐

## 2.2 Navigator through the "Safety Integrated" Function Manual

| Chapter | You can find answers to the following questions in the chapter: |
|---|---|
| Description (Page 21) | • What are basic functions and what are extended functions?<br>• Which safety functions does the inverter have?<br>• Which interfaces does the inverter have to select the safety functions?<br>• What preconditions, restrictions and recommendations apply when using the safety functions?<br>• How do the safety functions basically work? |
| Installing (Page 45) | • Which sequence is recommended when installing the inverter?<br>• What options are available to connect the inverter to the higher-level control system via PROFIsafe?<br>• How are the PROFIsafe control words and status words assigned?<br>• How do you wire the fail-safe digital inputs and outputs of the inverter?<br>• What differences are there when wiring inside and outside the control cabinet?<br>• How do you connect a monitored motor holding brake? |
| Commissioning (Page 99) | • Which sequence is recommended when commissioning the inverter?<br>• Which tool do you require for commissioning?<br>• How do you restore the factory setting of the safety functions?<br>• In SINAMICS G120, is it permissible to use the safety functions according to SIL 2 and SIL 3 together?<br>• How do you commission the safety functions?<br>• How do you configure communications via PROFIsafe in the inverter?<br>• How do you transfer safety function parameters to other inverters?<br>• Why is it necessary to "Accept safety functions"?<br>• What does accepting safety functions involve? |
| Operation (Page 175) | • How do you maintain the guaranteed probability of failure of the safety functions over the mission time?<br>• How does the drive respond when selecting or deselecting a safety function?<br>• How do you switch on a motor with a safety function active?<br>• How does the drive respond to a discrepancy signal at a fail-safe digital input?<br>• How does the drive respond to limit value violations or if internal monitoring functions respond?<br>• How do you acknowledge safety function faults?<br>• How do the safety functions mutually influence one another?<br>• What do the alarm and fault messages of the safety functions mean? |
| Corrective maintenance (Page 291) | • How do you maintain the operational safety of the plant or machine?<br>• How do you replace defective components in the inverter or the inverter itself?<br>• How do you ensure that after a replacement the safety functions still function? |

| Chapter | You can find answers to the following questions in the chapter: |
|---|---|
| System properties (Page 325) | • How long may you operate the inverter?<br>• In which time intervals must you initiate the inverter self test?<br>• What is the probability of failure of the inverter safety functions?<br>• In which time does the drive respond when selecting a safety function?<br>• When a safety function is active, in which time does the drive respond to a motor malfunction?<br>• According to which standards are the inverter safety function certified?<br>• Where can you find certifications for the inverter?<br>• What is the technical data of the Safe Brake Relay? |
| Appendix (Page 339) | • What does a typical acceptance for a safety function look like?<br>• As machine builder or company operating a machine, which standards and regulations must you comply with?<br>• Where can you find additional information about the inverter? |

# Description 3

## 3.1 About this chapter

### What can you find in this Chapter?

In this chapter, you will find answers to the following questions:

- What are basic functions and what are extended functions?
- What safety functions does my inverter have?
- Which interfaces to select the safety functions does my inverter have?
- Which preconditions, restrictions and recommendations apply when using the safety functions?
- How do the safety functions basically work?

## 3.2 Basic functions and extended functions

The safety functions integrated in the drive are split up according to basic functions and extended functions.

| Safety functions integrated in the drive | |
|---|---|
| **Basic functions** | **Extended functions** |
| The basic functions prevent hazardous motion using one or several of the following measures:<br>• The energy feed to the motor is safely switched off<br>• The energy feed to the motor holding brake is safely switched off<br>The following basic functions are available:<br>• Safe Torque Off (STO)<br>• Safe Brake Control (SBC)<br>• Safe Stop 1 (SS1) without speed monitoring<br>Each of the inverters described in this manual has one or several of the basic functions. | Extended functions include several basic functions and additional functions to safely monitor the motor speed:<br>• STO and SBC basic functions<br>• Safe Stop 1 (SS1) with speed monitoring<br>• Safely Limited Speed (SLS)<br>• Safe Direction (SDI)<br>• Safe Speed Monitor (SSM)<br>Whether an inverter has extended functions generally depends on the Control Unit hardware. The corresponding inverters have an "F" at the end of the product name, e.g. Control Unit CU240E-2 F. For SINAMICS G120 with a CU250S-2 Control Unit, you require a license for the extended functions. |

Table 3-1 Inverters with safety functions integrated in the drive

| Inverter | Basic functions | | Extended functions | |
|---|---|---|---|---|
| | STO | SS1, SBC | SS1, SDI, SLS | SSM, SLS with switchable SLS levels |
| <br>SINAMICS G110M | Available with all product versions | --- [1] | --- | |
| <br>SINAMICS G120C | Available with all product versions | --- | --- | |
| <br>SINAMICS G120 | Available with all CU240E-2 and CU250S-2 Control Units | Available with all CU250S-2 Control Units | Available with the following Control Units:<br>CU240E-2 F<br>CU240E-2 DP-F<br>CU240E-2 PN-F<br>CU250S-2 [2]<br>CU250S-2 DP [2]<br>CU250S-2 PN [2]<br>CU250S-2 CAN [2] | Available with the following Control Units:<br>CU240E-2 DP-F<br>CU240E-2 PN-F<br>CU250S-2 DP [2]<br>CU250S-2 PN [2] |

| Inverter | Basic functions | | Extended functions | |
|---|---|---|---|---|
| | STO | SS1, SBC | SS1, SDI, SLS | SSM, SLS with switchable SLS levels |
| SINAMICS G120D | Available with all Control Units | --- | Available with the following Control Units:<br>CU240D-2 DP-F<br>CU240D-2 PN-F<br>CU240D-2 PN-F PP<br>CU240D-2 PN-F FO<br>CU250D-2 DP-F<br>CU250D-2 PN-F<br>CU250D-2 PN-F PP<br>CU250D-2 PN-F FO | |
| SIMATIC ET 200pro FC-2 | Available | --- | --- | |

1) ---: Not available

2 Requires a license for the safety functions

## 3.3 Interfaces to select the safety functions

Depending on the inverter, the safety function interfaces are fail-safe digital inputs and outputs (F-DI, F-DO), safety-related fieldbus communication PROFIsafe - and a fail-safe digital output to control a brake.

| Inverter | | F-DI | F-DO | PROFIsafe | Safe brake control |
|---|---|---|---|---|---|
| | SINAMICS G110M with Control Unit … | | | | |
| | CU240M USS | 1 | --- [1] | --- | --- |
| | CU240M DP<br>CU240M PN | 1 | --- | Telegram 30 [3] | --- |
| | SINAMICS G120C USS<br>SINAMICS G120C CAN | 1 | --- | --- | --- |
| | SINAMICS G120C DP<br>SINAMICS G120C PN | 1 | --- | Telegram 30 [3] | --- |
| | SINAMICS G120 with Control Unit … | | | | |
| | CU240E-2 | 1 + 1 [5] | --- | --- | --- |
| | CU240E-2 DP<br>CU240E-2 PN | 1 + 1 [5] | --- | Telegram 30 [3] | --- |
| | CU240E-2 F | 3 + 1 [5] | --- | --- | --- |
| | CU240E-2 DP-F<br>CU240E-2 PN-F | 3 + 1 [5] | --- | Telegram 30 [3], Telegram 900 [4] | --- |
| | CU250S-2<br>CU250S-2 CAN | 3 + 1 [5] | 1 | --- | With Safe Brake Relay |
| | CU250S-2 DP<br>CU250S-2 PN | 3 + 1 [5] | 1 | Telegram 30 [3], Telegram 900 [4] | With Safe Brake Relay |

[1] --- Not available

[2] The inverter evaluates the F0 rail in the backplane bus of the ET 200pro system via an internal fail-safe digital input. The ET-200pro F-RSM and F-Switch modules control the F0 rail.

[3] Telegram 30 for control and for the status feedback signal from the safety functions

[4] Telegram 900: Function as for telegram 30 and additional feedback signal of the F-DI status

[5] In addition to the fail-safe digital inputs of the Control unit, an additional fail-safe digital input is available for the STO function on PM240-2 FSD … FSF and PM240P-2 FSD … FSF Power Modules.

| Inverter | | F-DI | F-DO | PROFIsafe | Safe brake control |
|---|---|---|---|---|---|
| | SINAMICS G120D with Control Unit … | | | | |
| | CU240D-2 DP<br>CU240D-2 PN | 1 | --- | Telegram 30 [3] | --- |
| | CU240D-2 DP-F<br>CU240D-2 PN-F<br>CU240D-2 PN-F PP<br>CU240D-2 PN-F FO<br>CU250D-2 DP-F<br>CU250D-2 PN-F<br>CU250D-2 PN-F PP<br>CU250D-2 PN-F FO | 3 | 1 | Telegram 30 [3], Telegram 900 [4] | --- |
| | SIMATIC ET 200pro FC-2 | Via ET 200pro system [2] | --- | Via ET 200pro system [2] | --- |

[2] The inverter evaluates the F0 rail in the backplane bus of the ET 200pro system via an internal fail-safe digital input. The ET-200pro F-RSM and F-Switch modules control the F0 rail.

[3] Telegram 30 for control and for the status feedback signal from the safety functions

[4] Telegram 900: Function as for telegram 30 and additional feedback signal of the F-DI status

## 3.4 Preconditions when using the safety functions

### Risk assessment

A risk analysis and assessment of the plant or machine is required before using the safety functions integrated in the drive.

The risk analysis and assessment must verify the following:

- The safety function integrated in the drive is suitable as a protective measure to minimize risks associated with the machine.
- The accepted probability of failure of the protective measure must be greater or equal to the certified probability of failure of the safety function integrated in the drive.
  Certification (Page 328)

### Motors and control modes

You can use the basic functions without any restrictions:

- For all control modes: U/f control and speed control with and without encoder
- With synchronous and induction motors
- For group drives, which involves the simultaneous operation of several motors connected to one inverter

It is only permissible that you use the extended functions under the following preconditions:

- With induction motors for all control modes
- With SIEMOSYN synchronous motors only with U/f control
- For group drives

### Encoderless safety functions

The safety functions integrated in the drive do not use an encoder.

"Encoderless" means the following:

- You do not require an encoder to use the safety functions integrated in the drive.
- If the inverter has an encoder connection, the inverter uses the encoder signal to control (closed loop) the motor. The safety functions ignore the encoder signal.

### Taking into account the slip of induction motors

The speed of the motor shaft is relevant for the functional safety in or on a machine. However, the extended functions monitor the electrical speed of the motor against the limit values that have been set.

If you use encoderless safety functions with an induction motor, you must take into account the motor slip when setting the speed monitoring.

## 3.5 Restrictions when using safety functions

### Not permitted: Operation with pulling loads

It is not permissible that you use the encoderless safety functions in applications involving pulling loads, e.g. in hoisting gear, elevators and unwinders.

**WARNING**

**Unexpected load acceleration as a result of incorrect closed-loop motor control**

The encoderless actual value sensing does not identify all faults and errors in the closed-loop motor control. As a consequence, encoderless safety functions, cannot identify whether a pulling load undesirably accelerates the drive due to a fault in the closed-motor control.

- Never use safety functions with encoderless speed monitoring for drives with pulling loads.

#### What options are there for monitoring the speed for pulling loads?

- You can implement speed monitoring in machines with pulling loads in one the following ways:
  - Select a drive with safety functions that use an encoder, for example SINAMICS S120.
  - Implement the speed monitoring in the higher-level control by using a suitable measuring system to acquire the speed/velocity.
- Coupled electric drives, e.g. test stands and winders/unwinders comprise a driving and a driven drive. Using the extended functions in the drive that has a driving function in a coupled drive system. In the case of a fault, the drive with the driving function identifies when a limit value is violated.

### Not permitted: Motors with different pole pair numbers

**WARNING**

**Unexpectedly high speeds as a result of incorrect motor data**

If you use the "Drive data set" function to switch over motors with different pole pair numbers, then the calculated, safety-related speed differs from the mechanical speed of the motor shaft. As a consequence, the motor shaft can accelerate above the configured monitoring limits of the safety function. This can result in death or severe injury.

- When using the "drive data set" function, only switch between motors with the same pole pair number.

#### Monitoring the speed of motors with different pole pair numbers

Implement the speed monitoring in the higher-level control by using a suitable measuring system to acquire the velocity or speed.

## Critical applications

If a safety function is not enabled in the inverter, then you can use the following critical applications without any restrictions.

If a safety function is enabled in the inverter, then several applications can result in faults in the safe actual value sensing. For active or enabled safety functions, faults and errors in the safety-related actual value sensing initiate a stop response: Messages C01711, C30711 with default values 1040 ff.

The stop response does not result in an unsafe drive state, but in a lower drive availability.

| Critical application | Remedy |
|---|---|
| Motor data identification during commissioning | Only commission the safety functions after the motor data identification has been completed. |
| Setpoint change as step function | Set the ramp-function generator times to values > 0.5 s. |
| Reversing the speed | If you are using an inverter with position control, then you must set the position controller and the travel profile so that there is absolutely no overshoot in the speed/velocity characteristic.<br>Within 1 s, only one acceleration and one braking ramp are permitted. The cycle 0 → $n_{set}$ → -$n_{set}$ → 0 must be at least 2 s long. |
| Load change as step function | Do not use the safety functions. |
| Continuous operation at speeds < 5 % of the rated speed | |
| Switching-on the inverter with the motor rotating ("flying restart" function) | Avoid using the "flying restart" function when a safety function is active.<br>Temporarily deactivate the safety function until the "flying restart" function has been successfully completed.<br>It is not permissible that you use the "flying restart" function if you are using the SSM function. It is not possible to deactivate SSM using a control signal. |
| Operating an inverter at the current limit | Select and dimension the drive so that the inverter current limit does not respond. After commissioning, check that the inverter does not reach its current or torque limits – even at full load. |
| Braking a motor using the "DC braking" or "Compound braking" functions | Avoid using the "DC braking" or "Compound braking" functions when a safety function is active.<br>If you require one of the two braking functions, in the risk assessment you must check where it is permissible that you deactivate the safety function while braking. If yes, then deactivate the safety function until braking has been completed.<br>If you use the SSM function, then it is not permissible to use the two braking functions. It is not possible to deactivate SSM using a control signal. |

## Restriction with SINAMICS G120 Power Modules

You cannot use all of the integrated safety functions when using the following Power Modules:

| Power Module | Restriction |
|---|---|
| Power Module PM230 with IP55 degree of protection | Article numbers 6SL3223-0DE . . - . . **A** . :<br>The integrated safety functions are not possible. |
| | Article numbers 6SL3223-0DE . . - . . **G** . :<br>The basic STO function is possible. |
| PM230 Power Module in degree of protection IP20 and push through format | Article numbers 6SL321 . -1NE . . - . . **L** . :<br>The integrated safety functions are not possible. |
| | Article numbers 6SL321 . -1NE . . - . . **G** . :<br>The basic STO function is possible. |
| PM240 FSGX Power Module | Article numbers 6SL3224-0XE4 . - . UA0:<br>Only the basic STO, SBC and SS1 functions are permissible. |

## 3.6 Recommendations for stable operation

The following preconditions must be satisfied to ensure disturbance-free inverter operation with the extended functions enabled:

- Motor and inverter are adequately dimensioned for this application:
  - The inverter is operated below its current limit.
  - The rated currents of the motor and inverter must not differ by more than a factor of 5: Inverter rated current/motor rated current < 5 (r0207[0] / p0305 < 5).
- Before commissioning the safety functions, optimally set the closed-loop control:
  - Carry out motor data identification at standstill.
  - Carry out a rotating measurement.
  - Avoid multiple speed overshoots when settling after a setpoint change.
  - Avoid reversing the motor within less than 2 s.

# 3.7 An overview of the principle of operation of the safety functions

## 3.7.1 Safe Torque Off (STO)

### What is the effect of the STO safety function?

The inverter with active STO function prevents energy supply to the motor. The motor can no longer generate torque on the motor shaft.

Consequently, the STO function prevents the starting of an electrically-driven machine component.

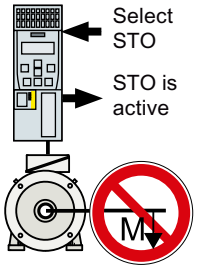


Table 3-2 The STO principle of operation as overview

| | Safe Torque Off (STO) | Standard inverter functions linked with STO |
|---|---|---|
| 1. | The inverter identifies when STO is selected via a failsafe input or via PROFIsafe. | --- |
| 2. | The inverter prevents the energy supply to the motor. | If you use a motor holding brake, the inverter closes the motor holding brake.<br>If you use a line contactor, the inverter opens the line contactor. |
| 3. | The inverter signals "STO is active" via a failsafe digital output or via PROFIsafe. | --- |

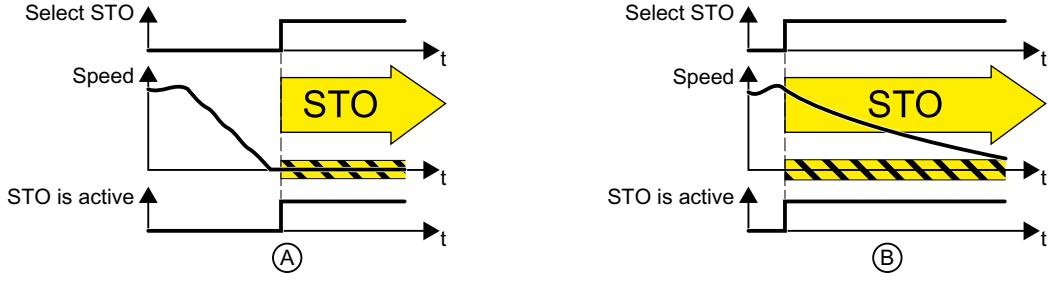


Figure 3-1 Functionality of STO when the motor is at standstill (A) and rotating (B)

(A): When selecting STO, if the motor is already stationary (zero speed), then STO prevents the motor from starting.

(B): If the motor is still rotating (B) when STO is selected, it coasts down to standstill.

### The STO safety function is standardized

The STO function is defined in IEC/EN 61800-5-2:

"[…] [The inverter] does not supply any energy to the motor which can generate a torque (or for a linear motor, a force)".

⇒ The STO inverter function conforms to IEC/EN 61800-5-2.

## Application examples for the STO function

The STO function is suitable for applications where the motor is already at a standstill or will come to a standstill in a short, safe period of time through friction. STO does not shorten the run-on time of machine components.

| Examples | Possible solution |
|---|---|
| When the EMERGENCY STOP button is pressed, it is not permissible for a stationary motor to inadvertently accelerate. | • Connect the EMERGENCY STOP pushbutton with a failsafe inverter digital input.<br>• Select STO via the failsafe digital input. |
| A central EMERGENCY STOP button must prevent the unintentional acceleration of several motors that are at a standstill. | • Evaluate the EMERGENCY STOP button in a central control.<br>• Select STO via PROFIsafe. |

## The distinction between EMERGENCY SWITCHING OFF and EMERGENCY STOP

EN 60204-1 defines "EMERGENCY SWITCHING OFF" and "EMERGENCY STOP" as actions taken in an emergency. Further, it defines various stop categories for EMERGENCY STOP. "EMERGENCY SWITCHING OFF" and "EMERGENCY STOP" minimize different risks in the system or machine.

| Action: | EMERGENCY SWITCHING OFF | EMERGENCY STOP<br>Stop Category 0 according to EN 60204-1 |
|---|---|---|
| Risk: | 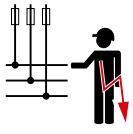 <br>Electric shock | 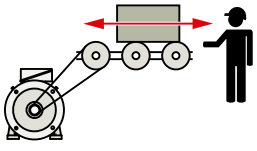 <br>Unexpected movement |
| Measure to minimize risk: | **Switch off**<br>Either completely or partially switch off hazardous voltages. | **Prevent movement**<br>Prevent hazardous movement. |

| Action: | EMERGENCY SWITCHING OFF | EMERGENCY STOP<br>Stop Category 0 according to EN 60204-1 |
|---|---|---|
| Classic solution: | 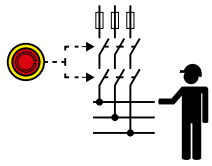 | 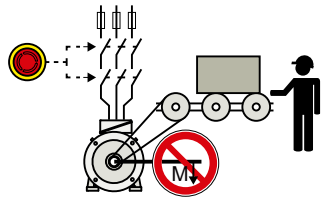 <br>Switch off the drive power supply |
| Solution with the STO safety function integrated in the drive: | Not possible.<br>STO is not suitable for switching off a voltage. | 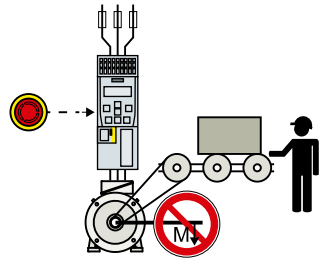 <br>Select STO<br>It is not necessary to switch off the voltage to minimize risk. |

## 3.7.2 Safe Brake Control (SBC)

### What is the effect of the SBC safety function?

An inverter equipped with the SBC function monitors the cables to an electromagnetic brake and when requested, safely shuts down the 24 V control of the brake.

You must supplement the inverter with a Safe Brake Relay for the SBC function.

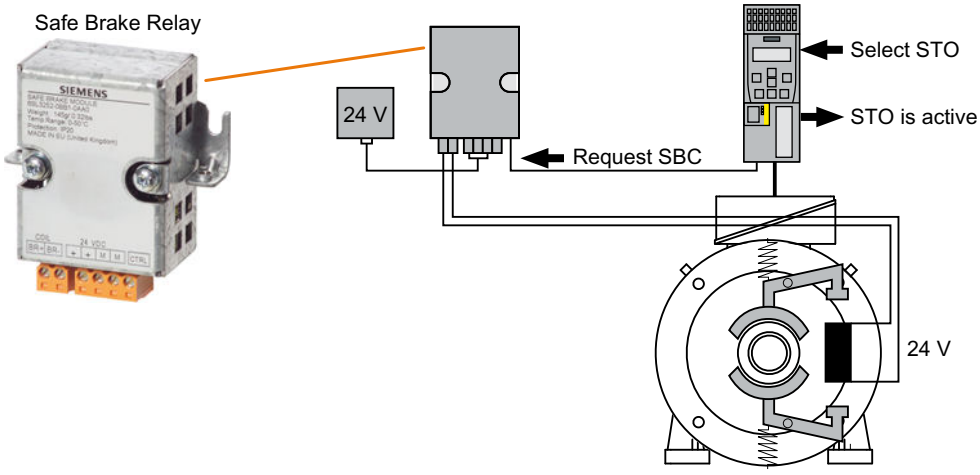


The brake can be integrated in the motor or externally mounted.

Table 3-3 An overview of the principle of operation of SBC

| | Safe Brake Control (SBC) | Standard brake function |
|---|---|---|
| 1. | When the STO function is active, the inverter requests the SBC function via the connecting cable to the Safe Brake Relay.<br>The Safe Brake Relay safely switches off the supply voltage for the connected brake. | The brake closes. |
| 2. | The inverter signals "STO is active" via a fail-safe digital output or via PROFIsafe. | --- |

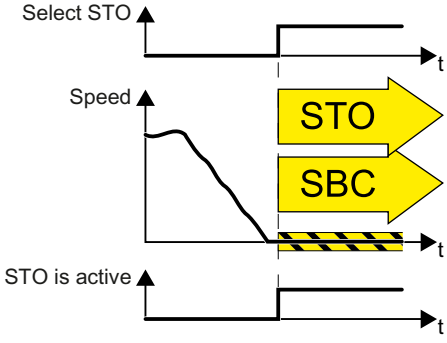


Figure 3-2 The principle of operation of SBC

The SBC function is not able to identify as to whether the brake is mechanically worn, for example.

## The SBC safety function is standardized

The SBC function is defined in IEC/EN 61800-5-2:

"The SBC function supplies a safe output signal to control an external brake."

⇒ The SBC inverter function is in conformance with IEC/EN 61800-5-2.

## Application example for the SBC function

| Example | Possible solution |
|---|---|
| After a hoisting gear stops, the inverter must close the brake in order to minimize the risk of the load falling. | • Connect the motor holding brake to the inverter via Safe Brake Relay.<br>• Select STO when the drive stops. |

## 3.7.3 Safe Stop 1 (SS1)

### What is the effect of the SS1 safety function?

The inverter with active SS1 function initially brakes the motor and then prevents energy being supplied to the motor.

As a consequence, the SS1 function reduces the kinetic energy of electrically driven machine components to the lowest possible level.

The principle of operation of SS1 differs depending on whether you use SS1 with Basic Functions or with Extended Functions.

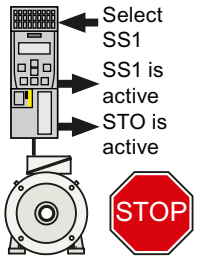


#### SS1 of the Basic Functions

Table 3-4 An overview of the principle of operation of SS1, selected when the motor is rotating

| | Safe Stop 1 (SS1) | Standard inverter functions linked with SS1 |
|---|---|---|
| 1. | The inverter identifies when SS1 is selected via a failsafe input or via PROFIsafe. | --- |
| 2. | SS1 starts a safety timer T.<br>The inverter signals "SS1 is active". | The inverter brakes the motor along the OFF3 ramp. |
| 3. | After the timer expires, the inverter safely switches off the motor torque with the STO function.<br>The inverter signals "STO is active" via a failsafe digital output or via PROFIsafe. | --- |

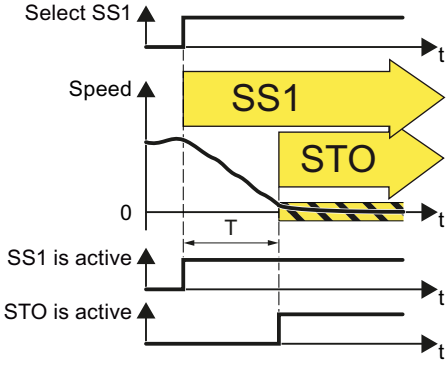


Figure 3-3 Principle of operation of SS1 of the Basic Functions

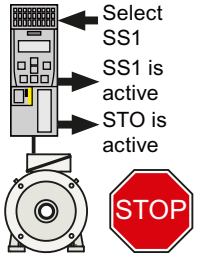


### SS1 of the Extended Functions

Table 3-5 An overview of the principle of operation of SS1, selected when the motor is rotating

| | Safe Stop 1 (SS1) | Standard inverter functions linked with SS1 |
|---|---|---|
| 1. | The inverter identifies when SS1 is selected via a failsafe input or via PROFIsafe. | --- |
| 2. | The inverter monitors as to whether the motor speed decreases.<br>The inverter signals "SS1 is active". | The inverter brakes the motor along the OFF3 ramp. |
| 3. | If the motor speed is low enough, the inverter safely switches off the motor torque using STO.<br>The inverter signals "STO is active" via a failsafe digital output or via PROFIsafe. | --- |

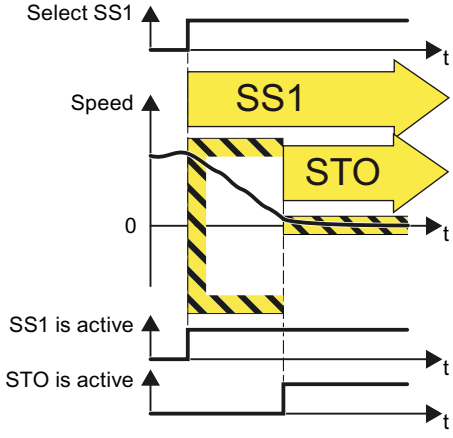


Figure 3-4 Principle of operation of SS1 of the Extended Functions

## The SS1 safety function is standardized

The SS1 function is defined in IEC/EN 61800-5-2:

"[…] [1] Initiate and monitor the magnitude of the motor deceleration within the defined limits and initiate the STO function if the motor speed falls below a defined limit value.

or

[2] Initiate motor deceleration and activate the STO function after an application-specific time delay."

⇒ Inverter function SS1 of the Extended Functions is in conformance with the definition [1] of IEC/EN 61800-5-2.

⇒ Inverter function SS1 of the Basic Functions is in conformance with the definition [2] of IEC/EN 61800-5-2.

## Application example

| Example | Possible solution |
|---|---|
| The drive must brake as quickly as possible after the EMERGENCY STOP button has been pressed. It is not permissible that the stationary motor undesirably restarts. | • Select SS1 in the inverter via a failsafe digital input or via PROFIsafe. |

## The distinction between EMERGENCY SWITCHING OFF and EMERGENCY STOP

EN 60204-1 defines "EMERGENCY SWITCHING OFF" and "EMERGENCY STOP" as actions taken in an emergency. Further, it defines various stop categories for EMERGENCY STOP. "EMERGENCY SWITCHING OFF" and "EMERGENCY STOP" minimize different risks in the system or machine.

| Action: | EMERGENCY SWITCHING OFF | EMERGENCY STOP<br>Stop category 1 according to EN 60204-1 |
|---|---|---|
| Risk: | 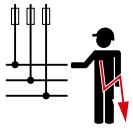 <br>Electric shock | 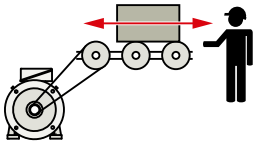 <br>Movement |
| Measure to minimize risk: | **Switch off**<br>Either completely or partially switch off hazardous voltages. | **Stop movement**<br>Stop hazardous movement and prevent any restart. |
| Classic solution: | 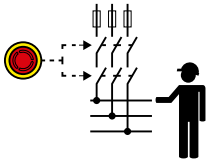 | 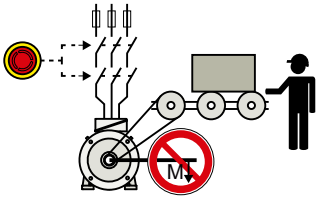 <br>Brake the motor and switch off the drive power supply |
| Solution based on the SS1 safety function integrated in the drive: | Not possible.<br>SS1 is not suitable for switching off a voltage. | 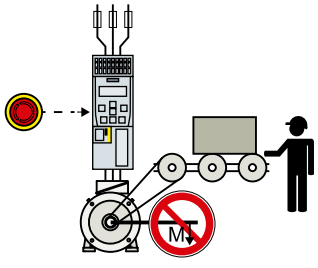 <br>Select SS1<br>It is not necessary to switch off the voltage to minimize risk. |

## 3.7.4 Safely Limited Speed (SLS)

### What is the effect of the SLS safety function?

The inverter with active SLS function monitors the motor speed. When the monitoring limit is exceeded, the inverter stops the motor as quickly as possible.

As a consequence, the SLS function allows an electrically driven machine component to be operated with a temporarily reduced speed or velocity that is not hazardous.

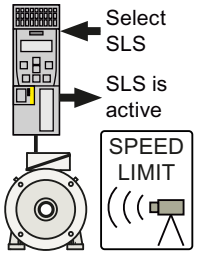


Table 3-6 An overview of the principle of operation of SLS, selected when the motor is rotating

| | Safely Limited Speed (SLS) | Standard inverter functions linked with SLS |
|---|---|---|
| 1. | The inverter identifies when SLS is selected via a fail-safe input or via safety-related PROFIsafe communication. | --- |
| 2. | SLS allows a motor to reduce its possibly inadmissibly high speed within a defined time – or to reduce it along a defined braking ramp. | The inverter limits the speed setpoint to values below the SLS monitoring.<br>If the motor rotates faster than the SLS monitoring value, then the inverter brakes the motor along the OFF3 ramp. |
| 3. | The inverter monitors the absolute actual speed against the set SLS monitoring.<br>The inverter signals "SLS is active" via a fail-safe digital output or via PROFIsafe.<br>If the motor speed exceeds the SLS monitoring, the inverter responds with a "safe stop" and brakes the motor as quickly as possible. | The inverter limits the speed setpoint to values below the SLS monitoring. |

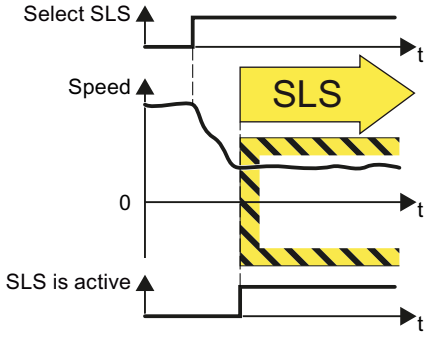


Figure 3-5 Principle of operation of SLS

### The SLS safety function is standardized

The SLS function is defined in IEC/EN 61800-5-2:

"The SLS function prevents the motor from exceeding the defined speed limit."

⇒ The SLS inverter function is in conformance with IEC/EN 61800-5-2.

## Application examples for the SLS function

| Examples | Possible solution |
|---|---|
| Setup mode: The machine operator must enter the dangerous area of a machine and manually introduce material into a machine part. | • Select SLS in the inverter via a fail-safe digital input or via PROFIsafe.<br>• The inverter limits and monitors the speed of the machine part. |
| A turning machine must not exceed a specific maximum torque in order to protect the drill chuck from damage. | |

## Functional expansion: selecting SLS levels

Expansion of the SLS function to include several SLS levels:

- The speed monitoring of the SLS function can be extended to include a maximum of 4 different SLS levels.
- The inverter requires additional safety-related signals to select an SLS level and to signal back which SLS level is active.

It is only possible to select SLS levels via PROFIsafe.

The switchover from a higher SLS level 2 to a lower SLS level 1 is described as example in the following.

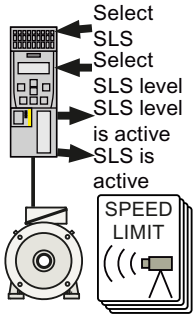


Table 3-7 Switching over from SLS level 2 to SLS level 1

| | Safely Limited Speed (SLS) | Standard inverter functions linked with SLS |
|---|---|---|
| 1. | The inverter signals "SLS level 2 is active" via the safety-related PROFIsafe communication. | The inverter limits the speed setpoint to values below SLS level 2. |
| 2. | The inverter recognizes the selection of SLS level 1 via the safety-related PROFIsafe communication. | |
| 3. | SLS allows a motor to reduce its possibly inadmissibly high speed within a defined time – or to reduce it along a defined braking ramp. | The inverter limits the speed setpoint to values below SLS level 1.<br>If the motor rotates faster than the SLS monitoring value, then the inverter brakes the motor along the OFF3 ramp. |
| 4. | The inverter monitors the absolute actual speed against SLS level 1.<br>The inverter signals "SLS level 1 is active" via the safety-related PROFIsafe communication. | The inverter limits the speed setpoint to values below SLS level 1. |

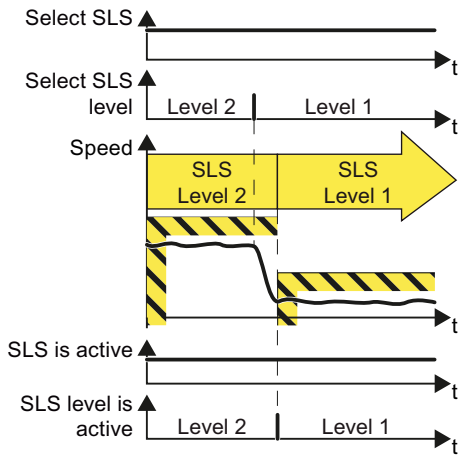


Figure 3-6 Switching over from SLS level 2 to SLS level 1

## Application example for selecting SLS levels

| Examples | Possible solution |
|---|---|
| Depending on the diameter of the saw blade, a circular saw must not exceed a specific maximum speed. | • Select SLS and the corresponding SLS level in the inverter via PROFIsafe. |

## 3.7.5 Safe Direction (SDI)

### What is the effect of the SDI safety function?

The inverter with active SDI function monitors the motor direction of rotation. If the motor rotates in the inhibited direction, the inverter stops the motor as quickly as possible.

The SDI function therefore prevents that an electrically driven machine component moves in the inhibited direction.

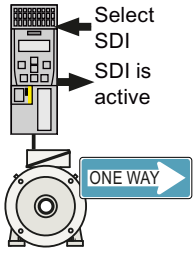


Table 3-8 An overview of the principle of operation of SDI, selected when the motor is rotating

| | Safe Direction (SDI) | Standard inverter functions linked with SDI |
|---|---|---|
| 1. | The inverter identifies when SDI is selected via a fail-safe input or via safety-related PROFIsafe communication. | --- |
| 2. | SDI allows a motor to stop moving in the inhibited direction of rotation within a defined time – or along a defined braking ramp. | The inverter limits the speed setpoint to values in the selected direction of rotation.<br>If the motor rotates in the inhibited direction, then the inverter brakes the motor along the OFF3 ramp. |
| 3. | The inverter monitors the direction of the actual speed.<br>The inverter signals "SDI is active" via a fail-safe digital output or via PROFIsafe.<br>If the motor rotates in the inhibited direction, the inverter responds with a "safe stop" and brakes the motor as quickly as possible. | The inverter limits the speed setpoint to values in the selected direction of rotation. |

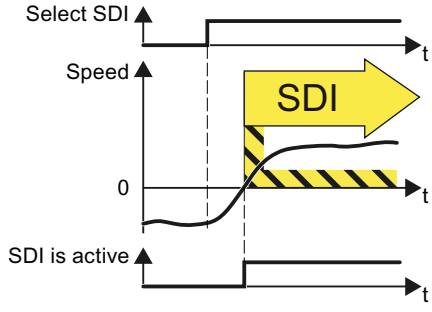


Figure 3-7 Principle of operation of SDI

### The SDI safety function is standardized

The SDI function is defined in IEC/EN 61800-5-2:

"The SDI function prevents the motor shaft moving in the wrong direction."

⇒ The SDI inverter function is in conformance with IEC/EN 61800-5-2.

## Application examples

| Example | Possible solution |
|---|---|
| When replacing the pressure cylinders of the plates, it is only permissible that the drive moves in the safe direction. | • Select SDI in the inverter via a fail-safe digital input or via PROFIsafe.<br>• In the inverter, inhibit the direction of rotation that is not permitted. |
| After a protective device to detect a jammed door responds, a rolling shutter gate may only move in the opening direction. | |
| When a crane trolley is at the operating limit switch then it may only start in the opposite direction. | |
| To manually clean the roller in a printing machine, the roller must only turn in a specific direction. | |

## 3.7.6 Safe Speed Monitoring (SSM)

### What is the effect of the SSM safety function?

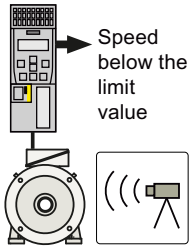


The inverter with active SSM function monitors the motor speed. The inverter signals whether the speed is above or below a limit value.

Table 3-9 An overview of the principle of operation of SSM

| | Safe Speed Monitoring (SSM) | Standard inverter functions linked with SSM |
|---|---|---|
| 1. | The SSM function cannot be selected or deselected using external control signals, in the appropriate setting, it is always active. | --- |
| 2. | The inverter compares the motor speed with an adjustable limit value. | |
| 3. | If the speed is less than the limit value, then the inverter signals "Speed below limit value" via a fail-safe digital output or via PROFIsafe. | |

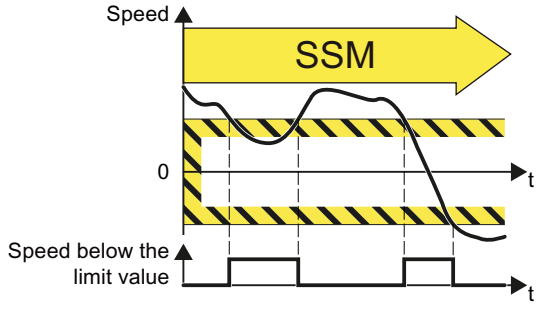


Figure 3-8 The principle of operation of SSM

### The SSM safety function is standardized

The SSM function is defined in IEC/EN 61800-5-2:

"The SSM function supplies a safe output signal to indicate whether the motor speed is below a specified limit value."

⇒ The SSM inverter function is in conformance with IEC/EN 61800-5-2.

### Application example

| Example | Possible solution |
|---|---|
| A centrifuge may only filled below a certain minimum velocity. | The inverter safely monitors the centrifuge speed and enables the process to advance to the next step using the status bit "Speed below limit value" via PROFIbus. |

# Installing 4

## 4.1 About this chapter

### What can you find in this Chapter?

In this chapter, you will find answers to the following questions:

- Which sequence is recommended when installing the inverter?
- What are the options to connect the inverter to the higher-level control system via PROFIsafe?
- How are the PROFIsafe control words and status words assigned?
- How do I wire the fail-safe digital inputs and digital outputs of my inverter?
- What differences are there when wiring inside and outside the control cabinet?
- How do I connect a motor holding brake that is to be monitored in the inverter?

## 4.2 Sequence when installing an inverter with safety functions

The following overview shows the procedure for installing integrated safety functions in an inverter. For information on some of the steps you will need to consult descriptions in other manuals.

### Procedure

To install the inverter, proceed as follows:

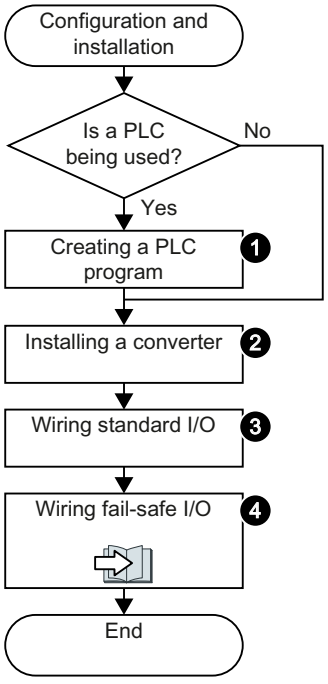


1. If you are using a higher-level control system (PLC), then create the control program first.
2. Install the inverter.
   ⇒ inverter operating instructions
3. Connect the inverter to the line supply, and wire the standard inputs and outputs of the inverter.
   ⇒ inverter operating instructions
4. How do you wire the failsafe digital inputs and outputs?
   Controlling via a fail-safe digital input (Page 58)
   Evaluating via a fail-safe digital output (Page 93)

You have installed the inverter.
❐

# 4.3 Connection via PROFIsafe

## 4.3.1 Overview of PROFIsafe connections

### Communication via PROFIsafe

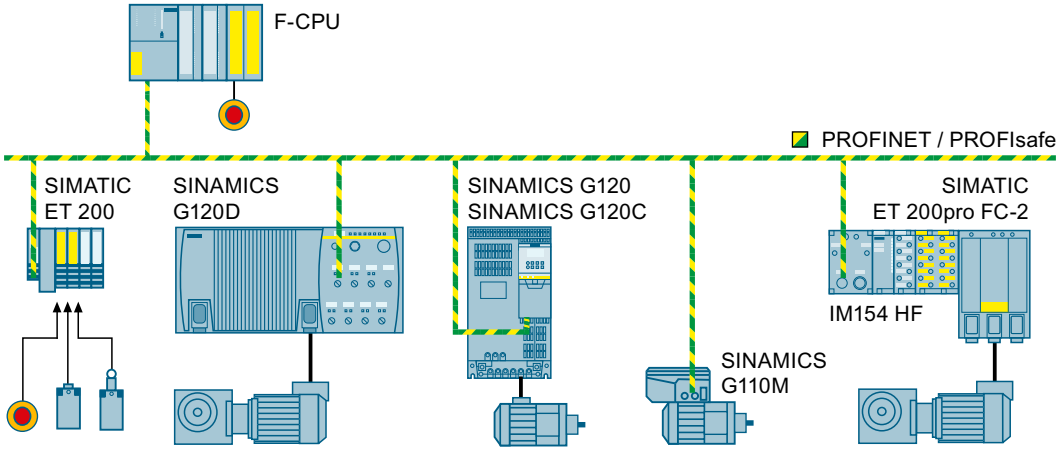


Figure 4-1 PROFIsafe communication between an F-CPU and an inverter, e.g. via PROFINET

For communication via PROFIsafe, you must connect the inverter to a central fail-safe controller (F-CPU) via either PROFIBUS or PROFINET.

### SIMATIC ET 200pro FC-2

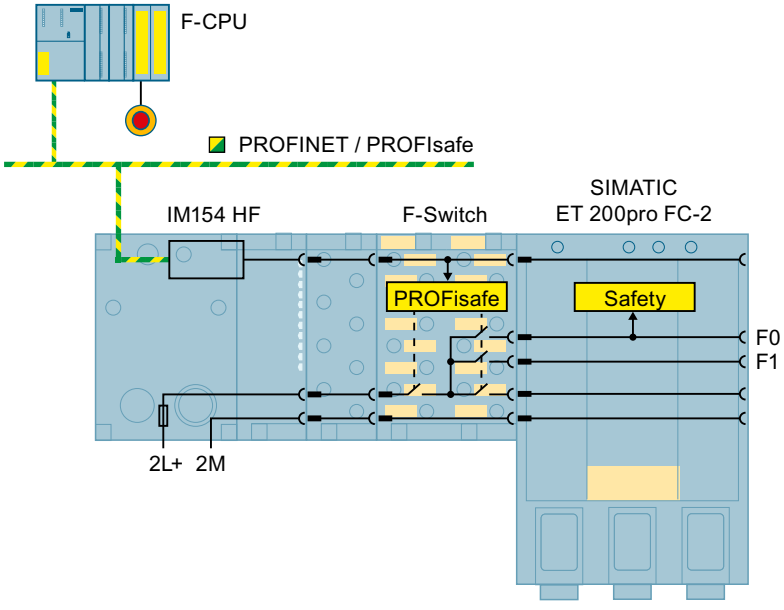


Figure 4-2 F switch for the PROFIsafe connection of the ET 200pro FC-2 inverter, e.g. via PROFINET

The SIMATIC ET 200pro FC-2 converter does not have its own PROFIsafe interface. The central F-CPU controls the safety functions of the ET 200pro FC-2 via a "High Feature" interface module and the PROFIsafe "F-Switch" module.

The F-Switch module switches the "F0" and "F1 rails" in the backplane bus of the ET-200pro system. The inverter evaluates the F0 rail via an internal failsafe digital input.

Additional information on the ET 200pro system and the F-Switch module is available in the "SIMATIC distributed ET 200pro I/O system" Operating instructions.

Overview of the manuals (Page 386).

Additional possibilities of installing the F-Switch module are listed in the Internet:

Installation guidelines ET 200pro (http://support.automation.siemens.com/WW/view/en/26694409).

## PROFIsafe communication within the SIMATIC ET 200pro

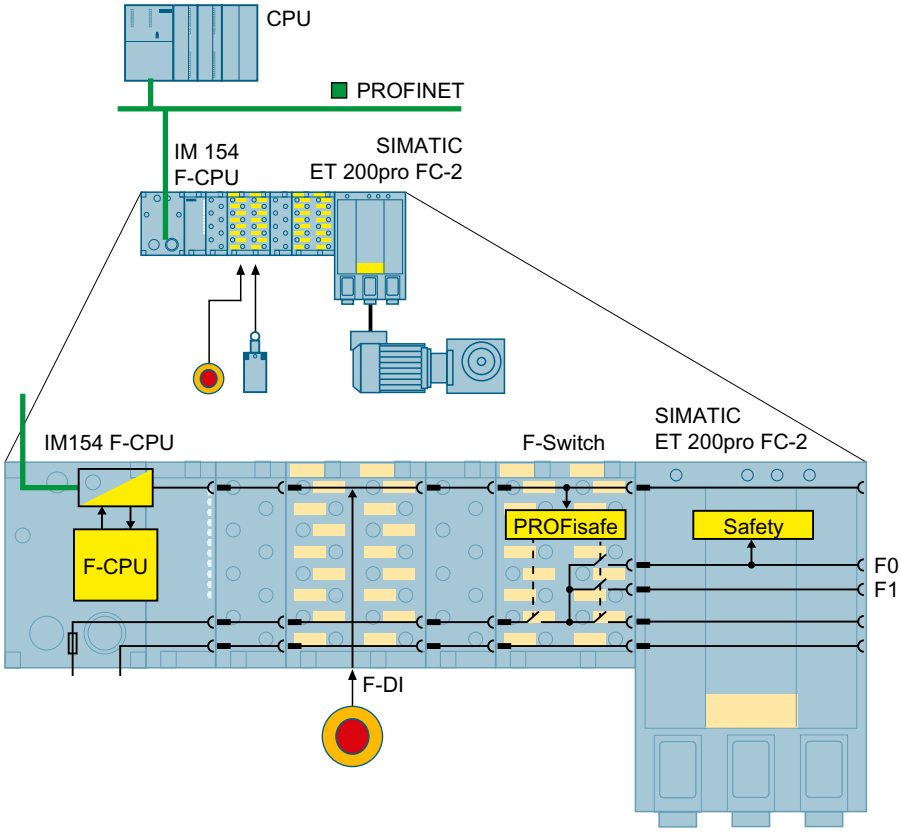


Figure 4-3 Safe communications between IM154 F-CPU and inverters within an ET 200pro, e.g. connected to PROFINET

The SIMATIC-ET-200pro system allows safe communication limited to the system itself to be established:

- The ET-200pro system is node on the PROFIBUS or PROFINET.
- Within the ET-200pro system, the interface module with integrated fail-safe controller (IM154 F-CPU) controls the inverter safety functions via PROFIsafe.

## Shared Device

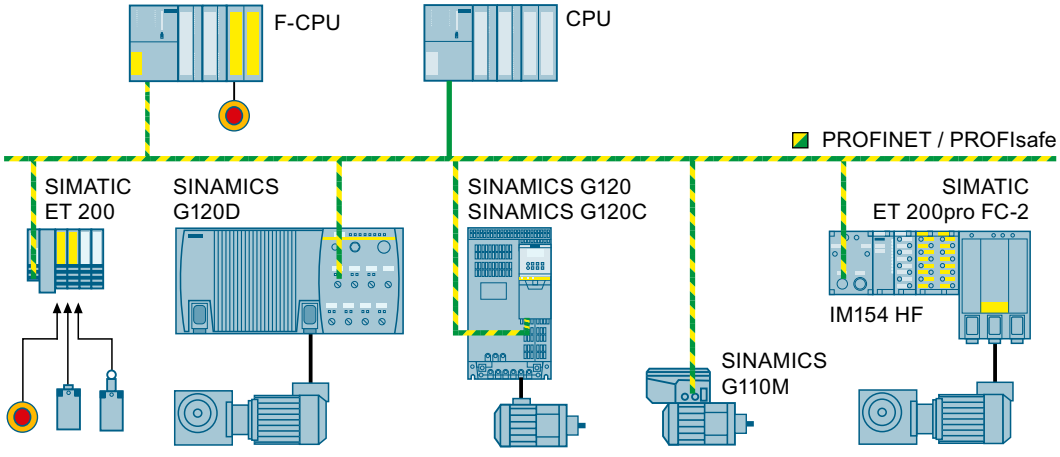


Figure 4-4 Shared device is possible with every inverter

The PROFINET "Shared Device" function allows two controls to access the same PROFINET IO device, e.g. on a SIMATIC ET 200 I/O system or on an inverter. Typical applications for "Shared Device" are systems, in which a standard CPU and a fail-safe CPU are used as separate controllers:

- The fail-safe controller (F-CPU) is responsible for the safety functions in the inverter or in the SIMATIC ET 200 I/O system.
- The standard controller transfers all other signals.

Further information is provided on the Internet:

Which controls support the Shared Device function (http://support.automation.siemens.com/WW/view/en/44383955).

## PROFIsafe communication I-slave ↔ slave

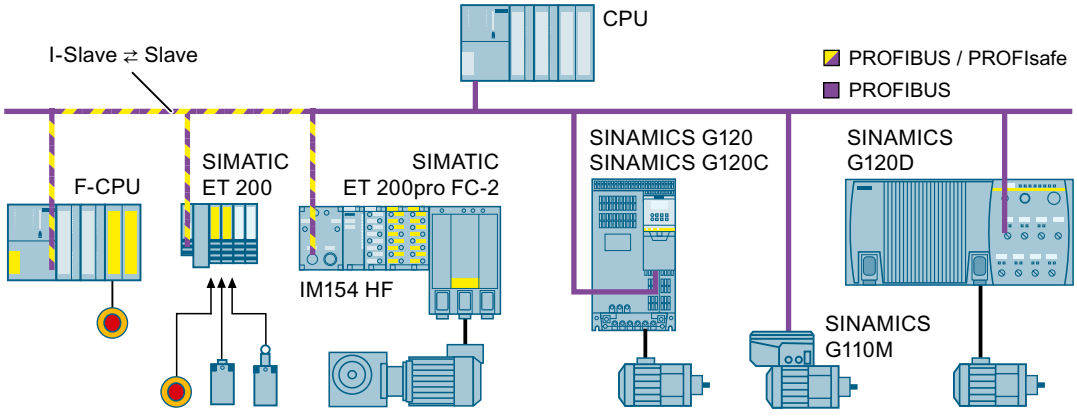


Figure 4-5 The I-slave-slave communication is only possible with ET 200pro FC-2

An I-slave is a CPU, which is integrated in a fieldbus as intelligent slave. The option of using an F-CPU as I-slave is only possible with PROFIBUS.

The SIMATIC ET 200pro FC-2 converter permits I-slave-slave communication. On one hand, the F-CPU is a slave connected to PROFIBUS, and on the other hand, controls the inverter safety functions via PROFIsafe.

PROFIsafe communications between SINAMICS inverters and an I-slave is not possible.

## 4.3.2 PROFIsafe telegrams

Two telegrams are available for the data exchange via PROFIsafe between the inverter and the higher-level controller:

Table 4-1 PROFIsafe telegrams

| Overview using PROFINET / PROFIsafe as example | Telegram | Process data (PZD) | |
|---|---|---|---|
| | | PZD1 | PZD2 |
| 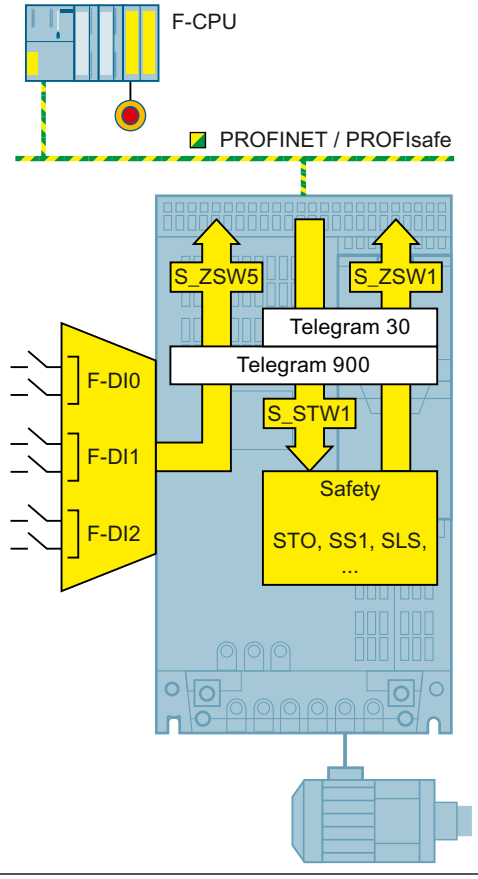 | **Telegram 30**<br>PZD 1/1 | S_STW1 | --- |
| | | S_ZSW1 | --- |
| | **Telegram 900**<br>PZD 2/2 | S_STW1 | S_STW5 |
| | | S_ZSW1 | S_ZSW5 |
| | The higher-level control selects the safety functions in the inverter via the control word S_STW1. The inverter uses the status word S_ZSW1 to report the status of the safety functions to the controller.<br>Telegram 900 of the PROFIsafe profile also includes control and status word 5. The inverter transfers the status of the fail-safe digital inputs F-DI 0 … F-DI 2 to the control system in status word S_ZSW5. | | |

S_STW: Safety control word; S_ZSW: Safety status word

### 4.3.3 Control word 1 and status word 1 (basic functions)

Table 4-2 Control word 1 (bit 0 ... 15)

| Byte | Bit | Function | Comment | |
|---|---|---|---|---|
| 0 | 0 | STO | 0 | Select STO |
| | | | 1 | Deselect STO |
| | 1 | SS1 | 0 | Select SS1 |
| | | | 1 | Deselect SS1 |
| | *2 … 6* | *Not relevant* | | |
| | 7 | Internal Event ack | 0 | Do not acknowledge faults |
| | | | 1 → 0 | Acknowledge "Internal event" for a 1 → 0 signal change |
| *1* | *8 … 15* | *Not relevant* | | |

Table 4-3 Status word 1 (bit 0 ... 15)

| Byte | Bit | Function | Comment | |
|---|---|---|---|---|
| 0 | 0 | Power removed | 0 | STO is not active |
| | | | 1 | STO is active |
| | 1 | SS1 active | 0 | SS1 is not active |
| | | | 1 | SS1 is active |
| | *2 … 6* | *Not relevant* | | |
| | 7 | Internal Event | 0 | Fault-free operation |
| | | | 1 | The inverter signals an "internal event" |
| *1* | *8 … 15* | *Not relevant* | | |

### 4.3.4 Control word 1 and status word 1 (extended functions)

Table 4-4 Control word 1 (bit 0 ... 15)

| Byte | Bit | Function | Comment | | | |
|---|---|---|---|---|---|---|
| 0 | 0 | STO | 0 | Select STO | | |
| | | | 1 | Deselect STO | | |
| | 1 | SS1 | 0 | Select SS1 | | |
| | | | 1 | Deselect SS1 | | |
| | *2, 3* | *Not relevant* | | | | |
| | 4 | SLS | 0 | Select SLS | | |
| | | | 1 | Deselect SLS | | |
| | *5, 6* | *Not relevant* | | | | |
| | 7 | Internal event ack | 0 | Do not acknowledge faults | | |
| | | | 1 → 0 | Acknowledge "Internal event" for a 1 → 0 signal change | | |
| 1 | *0* | *Not relevant* | | | | |
| | 1 | SLS level bit 0 | Select SLS level | | Bit 2 | Bit 1 |
| | 2 | SLS level bit 1 | | Level 1<br>Level 2<br>Level 3<br>Level 4 | 0<br>0<br>1<br>1 | 0<br>1<br>0<br>1 |
| | *3* | *Not relevant* | | | | |
| | 4 | SDI positive | 0 | Select SDI with positive direction of rotation | | |
| | | | 1 | Deselect SDI with positive direction of rotation | | |
| | 5 | SDI negative | 0 | Select SDI with negative direction of rotation | | |
| | | | 1 | Deselect SDI with negative direction of rotation | | |
| | *6, 7* | *Not relevant* | | | | |

Table 4-5 Status word 1 (bit 0 ... 15)

| Byte | Bit | Function | Comment | |
|---|---|---|---|---|
| 0 | 0 | Power removed | 0 | STO is not active |
| | | | 1 | STO is active |
| | 1 | SS1 active | 0 | SS1 is not active |
| | | | 1 | SS1 is active |
| | *2, 3* | *Not relevant* | | |
| | 4 | SLS active | 0 | SLS is not active |
| | | | 1 | SLS is active |
| | *5, 6* | *Not relevant* | | |
| | 7 | Internal Event | 0 | Fault-free operation |
| | | | 1 | The inverter signals an "internal event" |

| Byte | Bit | Function | Comment | | | |
|---|---|---|---|---|---|---|
| 1 | *0* | *Not relevant* | | | | |
| | 1 | SLS level bit 0 | SLS level is active | | Bit 2 | Bit 1 |
| | 2 | SLS level bit 1 | | Level 1<br>Level 2<br>Level 3<br>Level 4 | 0<br>0<br>1<br>1 | 0<br>1<br>0<br>1 |
| | *3* | *Not relevant* | | | | |
| | 4 | SDI positive active | 0 | SDI positive direction of rotation is not active | | |
| | | | 1 | SDI positive direction of rotation is active | | |
| | 5 | SDI negative active | 0 | SDI negative direction of rotation is not active | | |
| | | | 1 | SDI negative direction of rotation is active | | |
| | *6* | *Not relevant* | | | | |
| | 7 | Status SSM | 0 | Absolute value of the speed is greater than the SSM limit value | | |
| | | | 1 | Absolute value of the speed is less than the SSM limit value | | |

## 4.3.5 Control word 5 and status word 5

Table 4-6 Control word 5 (bit 0 ... 15)

| Byte | Bit | Function | Comment |
|---|---|---|---|
| 0 … 1 | 0 … 7 | *Reserved* | Assign the value 0 to the reserved bits. |

Table 4-7 Status word 5 (bit 0 ... 15)

| Byte | Bit | Function | Comment | | SINAMICS G120 | SINAMICS G120D |
|---|---|---|---|---|---|---|
| 0 | 0 … 7 | *Reserved* | - | | | |
| 1 | **0** | **Status of fail-safe digital inputs F-DI 0 … F-DI 2** | 0 | LOW signal (0 V) | At terminals 5 and 6 | At pins X7.2 and X7.4 |
| | | | 1 | HIGH signal (24 V) | | |
| | **1** | | 0 | LOW signal (0 V) | At terminals 7 and 8 | At pins X8.2 and X8.4 |
| | | | 1 | HIGH signal (24 V) | | |
| | **2** | | 0 | LOW signal (0 V) | At terminals 16 and 17 | At pins X9.2 and X9.4 |
| | | | 1 | HIGH signal (24 V) | | |
| | 3 … 7 | *Reserved* | - | | | |

Overview of the fail-safe digital inputs:

Overview (Page 58)

When one of the two following conditions is satisfied, the inverter sets the particular bit 0 … 2 in byte 1 of status word 5 to zero, independent of the voltage levels connected:

- The corresponding fail-safe digital input is not used.
- The inverter has deactivated the corresponding fail-safe digital input due to discrepant input signals.

## 4.3.6 Application examples

### Assigning the inverter to the input and output addresses of the control system

By configuring the higher-level control, you assign the control word and the status word in the PROFIsafe profile of the inverter to specific input and output addresses in the control.

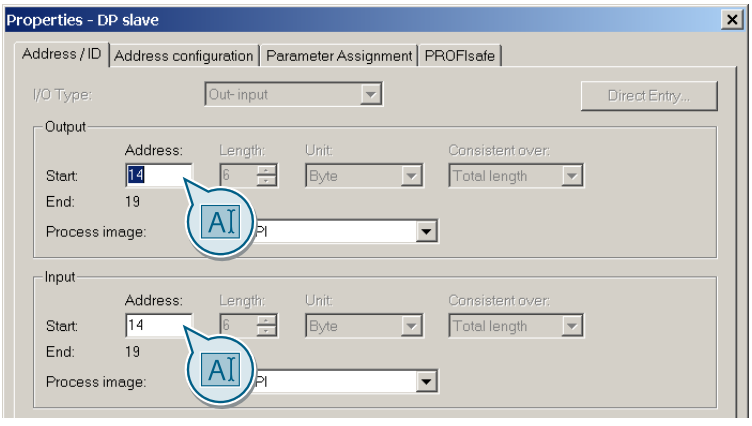


Figure 4-6 Example: in the control, assign the initial address 14 for the inverter

### Control the inverter using the control program

This results in the following assignments between the I/O addresses and inverter signals for this example:

Table 4-8 Control word 1

| I/O address | Significance | Comment | |
|---|---|---|---|
| A14.0 | Select STO | 0 | Select STO |
| | | 1 | Deselect STO |
| A14.1 | Select SS1 | 0 | Select SS1 |
| | | 1 | Deselect SS1 |
| A14.4 | Select SLS | 0 | Select SLS |
| | | 1 | Deselect SLS |
| A14.7 | Internal event ACK | - | Acknowledge with signal change 1 → 0 |
| A15.1 | Select SLS level bit 0 | - | Selection of the SLS level |
| A15.2 | Select SLS level, bit 1 | - | |
| A15.4 | Select SDI positive | 0 | Select SDI positive |
| | | 1 | Deselect SDI positive |
| A15.5 | Select SDI negative | 0 | Select SDI negative |
| | | 1 | Deselect SDI negative |

Table 4-9 Status word 1

| I/O address | Significance | Comment | |
|---|---|---|---|
| E14.0 | Power removed | 0 | The motor torque has not yet been switched off safely. |
| | | 1 | The motor torque has been switched off safely. |
| E14.1 | SS1 active | 0 | SS1 is not active |
| | | 1 | SS1 is active |
| E14.4 | SLS active | 0 | SLS is not active |
| | | 1 | SLS is active |
| E14.7 | Internal event | 0 | Fault-free operation |
| | | 1 | The inverter has detected an internal fault and responded accordingly, e.g. with a STOP A. |
| E15.1 | Active SLS level, bit 0 | - | Active SLS level |
| E15.2 | Active SLS level, bit 1 | - | |
| E15.4 | SDI positive active | 0 | SDI positive direction of rotation is not active |
| | | 1 | SDI positive direction of rotation is active |
| E15.5 | SDI negative active | 0 | SDI negative direction of rotation is not active |
| | | 1 | SDI negative direction of rotation is active |
| E15.7 | Status SSM | 0 | Absolute value of the speed is greater than the SSM limit value |
| | | 1 | Absolute value of the speed is less than the SSM limit value |

## SIMATIC library to control the safety functions

The library contains fail-safe SIMATIC S7 blocks for PROFIsafe communication between fail-safe SIMATIC S7-CPUs and SINAMICS.

LDrvSafe (https://support.industry.siemens.com/cs/ww/en/view/109485794)

## Additional application examples

An additional application example is provided on the Internet:

Controlling SINAMICS G120 via PROFIsafe using a SIMATIC S7-1200 F-CPU (https://support.industry.siemens.com/cs/ww/en/view/109746271)

# 4.4 Controlling via a fail-safe digital input

## 4.4.1 Overview

In the factory setting of the inverter, the fail-safe digital inputs are not assigned to the integrated safety functions. Only when commissioning do you define as to whether, for example, you use digital inputs DI 4 and DI 5 for the standard functions, or you creates a fail-safe digital input by combining them.

SIMATIC ET 200pro FC-2 inverters do not have any directly accessible fail-safe digital inputs. If you wish to control the safety function of this inverter via a fail-safe digital input within an ET-200pro station, then you require either an F-RSM or F-Switch module.

Wiring examples according to SIL 2 and PL d (Page 62).

### Assignment of the fail-safe digital inputs

Table 4-10 SINAMICS G120C

| | Terminal strip | Digital input | Fail-safe digital input |
|---|---|---|---|
| | 16 | DI 4 | F-DI 0 |
| | 17 | DI 5 | |

Table 4-11 SINAMICS G120 with CU240E-2, CU240E-2 DP or CU240E-2 PN Control Unit

| | Terminal strip on the Control Unit | | |
|---|---|---|---|
| | Terminals | Digital input | Fail-safe digital input |
| | 16 | DI 4 | F-DI 0 |
| | 17 | DI 5 | |

Table 4-12 SINAMICS G120 with Control Units
CU240E-2 F, CU240E-2 DP-F or CU240E-2 PN-F,
CU250S-2, CU250S-2 CAN, CU250S-2 DP or CU250S-2 PN

| | Terminal strip on the Control Unit | | | |
|---|---|---|---|---|
| | Terminals | Digital input | Fail-safe digital inputs | |
| | | | Basic functions | Extended functions |
| | 5 | DI 0 | --- | F-DI 0 |
| | 6 | DI 1 | | |
| | 7 | DI 2 | | F-DI 1 |
| | 8 | DI 3 | | |
| | 16 | DI 4 | F-DI 0 | F-DI 2 |
| | 17 | DI 5 | | |

Table 4-13 SINAMICS G120 with PM240-2 and PM240P-2 Power Modules

| | Terminals of the fail-safe digital input on PM240-2 FSD … FSF and PM240P-2 FSD … FSF Power Modules |
|---|---|
| | STO_A<br>STO_B |

Table 4-14 SINAMICS G120D with Control Units CU240D-2 DP and CU240D-2 PN,
SINAMICS G110M

| | Connector.pin | Digital input | Fail-safe digital input |
|---|---|---|---|
| | X09.4 | DI 4 | F-DI 0 |
| | X09.2 | DI 5 | |
| | X08.4 | DI 2 | F-DI 0 |
| | X08.2 | DI 3 | |

Table 4-15 SINAMICS G120D with Control Units
CU240D-2 DP-F, CU240D-2 PN-F, CU240D-2 PN-F PP and CU240D-2 PN-F FO,
CU250D-2 DP-F, CU250D-2 PN-F, CU250D-2 PN-F PP and CU250D-2 PN-F FO

| | Connector.pin | Digital input | Fail-safe digital inputs | |
|---|---|---|---|---|
| | | | Basic functions | Extended functions |
| | X07.4 | DI 0 | - | F-DI 0 |
| | X07.2 | DI 1 | | |
| | X08.4 | DI 2 | | F-DI 1 |
| | X08.2 | DI 3 | | |
| | X09.4 | DI 4 | F-DI 0 | F-DI 2 |
| | X09.2 | DI 5 | | |

Safety-related signals, e.g. the switching state of a sensor, must be wired to a fail-safe digital input through two channels. The inverter evaluates the signal on two separate signal paths.

To enable a safety function via the terminal strip of the inverter, you need a fail-safe digital input.

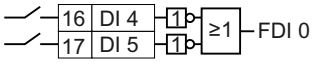


For specific default settings of the terminal strip, e.g. default setting 2, the inverter combines two digital inputs to form one fail-safe digital input FDI 0.

## Which devices are you allowed to connect?

The fail-safe digital input is designed for the following devices:

- Connection of safety sensors, e.g. emergency stop command devices or light curtains.
- Connection of pre-processing devices, e.g. fail-safe control systems and safety relays.

## Signal state

The inverter expects signals with the same state at its fail-safe digital input:

- High signal: The safety function is deselected.
- Low signal: The safety function is selected.

## PM-switching and PP-switching fail-safe digital outputs

Depending on the particular inverter, you may connect the following fail-safe digital outputs to a fail-safe digital input.

Table 4-16 PP-switching or PM-switching fail-safe digital outputs

| Output | It is permissible to connect the output to the following inverter and Power Module: | | |
|---|---|---|---|
| 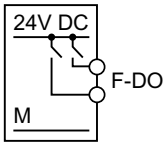 <br>PP switching output | <br>SINAMICS G120 | <br>SINAMICS G120C | <br>SINAMICS G120D<br> <br>SINAMICS G110M |
| 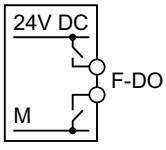 <br>PM switching output | <br>SINAMICS G120 | <br>SINAMICS G120C | |

## Fault detection

The inverter compares the two signals of the fail-safe digital input. The inverter thus detects, for example the following faults:

- Cable break
- Defective sensor

The inverter cannot detect the following faults:

- Cross-circuit of the two cables
- Short-circuit between signal cable and 24 V power supply

## Special measures to prevent cross-circuits and short-circuits

The routing of cables over longer distances, e.g. between remote control cabinets, increases the risk of damaging cables. Damaged cables raise the risk of an undetected cross-circuit with power-conducting cables laid in parallel. A cross-circuit can cause interruption to the transfer of safety-related signals.

To reduce the risk of cable damage, you need to lay signal lines in steel pipes.

### Special requirements placed on EMC-compliant installation

Use shielded signal cables. Connect the shield at both conductor ends.

In order to connect two or more inverter terminals, use the shortest possible jumpers directly at the terminals themselves.

### Bright and dark test

The inverter filters signal changes using bright and dark tests at the fail-safe digital input using an adjustable software filter.

## 4.4.2 Wiring examples according to SIL 2 and PL d

Examples for wiring the fail-safe digital inputs corresponding to PL d according to EN 13849-1 and SIL 2 according to IEC 61508 are provided on the following pages.

In order to reduce the scope of the examples, not all of the SINAMICS inverter types are listed in each wiring example.

If, in an example, two or more terminals of the inverter are connected together, then you must connect jumpers that are as short as possible directly at the terminals.

#### 4.4.2.1 Electromechanical sensor

If there is a risk of cross-circuits or short-circuits, the cables between the sensor and the inverter must be protected, for example, by routing them in a steel tube.

### The inverter supplies the power supply voltage

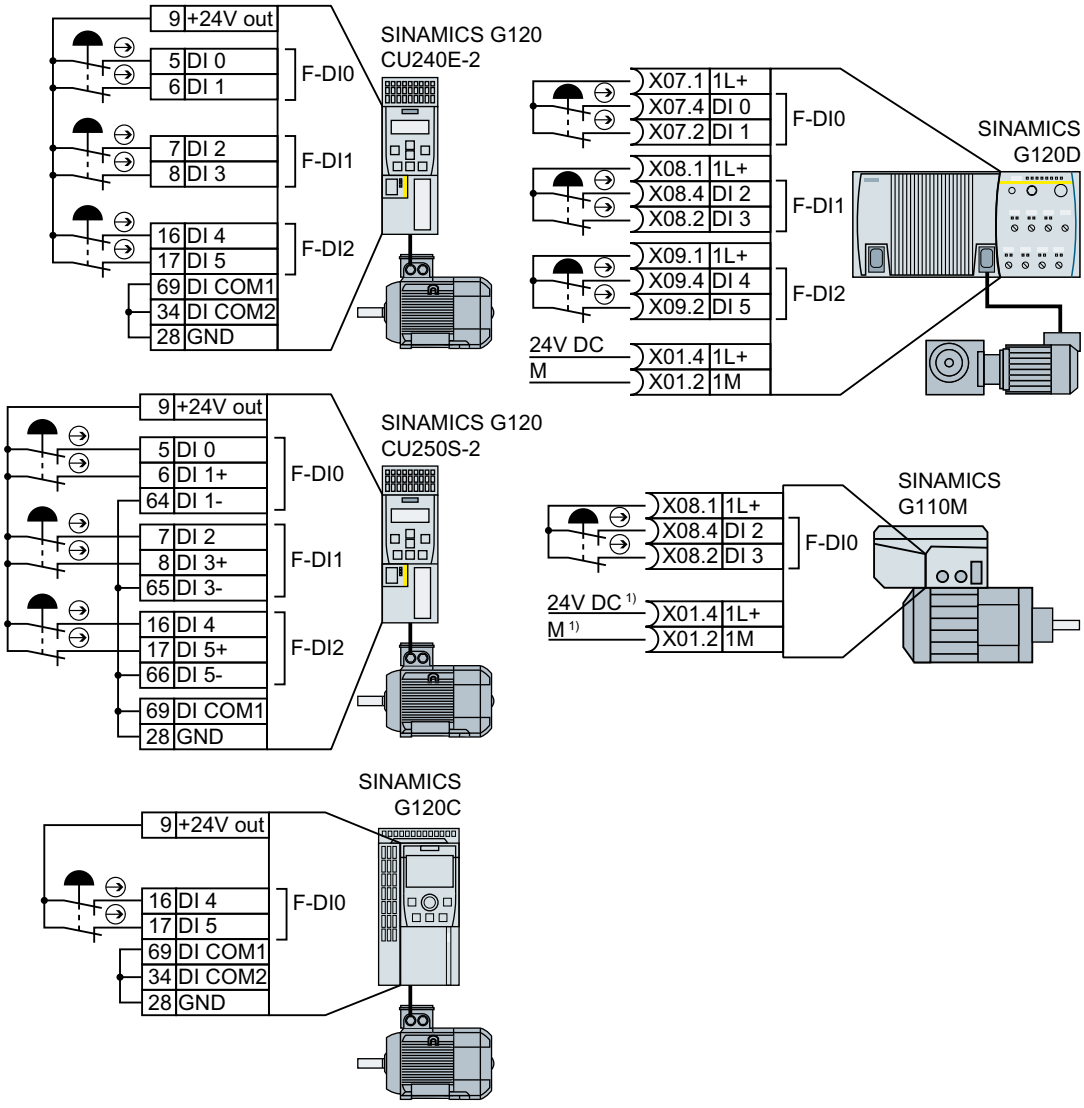


1) The 24 V supply is not required when using the G110M option "24 V power supply", article number 6SL3555-0PV00-0AA0

Figure 4-7 Connecting an electromechanical sensor to the inverter power supply

## External power supply

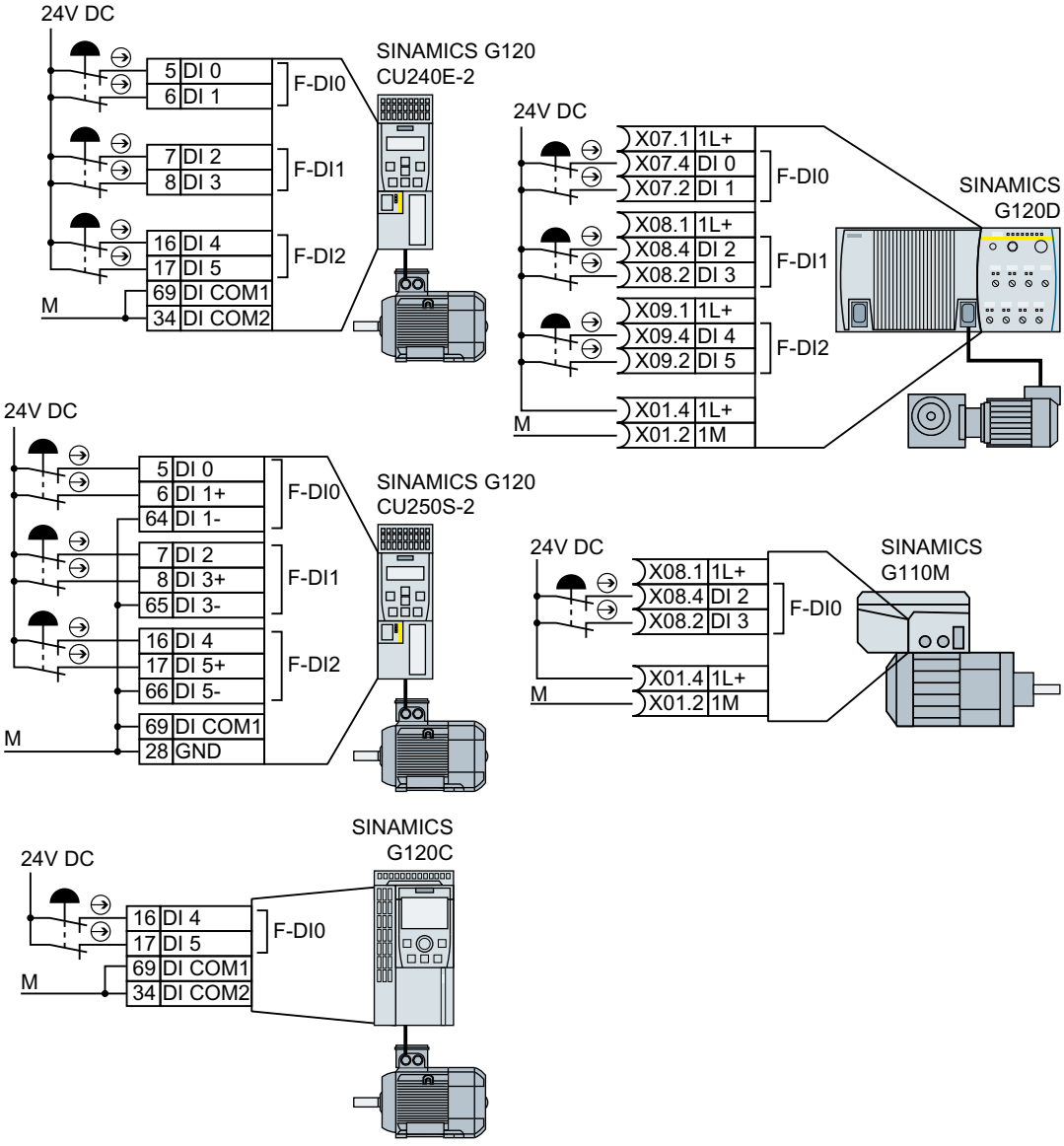


Figure 4-8 Connecting an electromechanical sensor to an external power supply

## SIMATIC ET 200pro

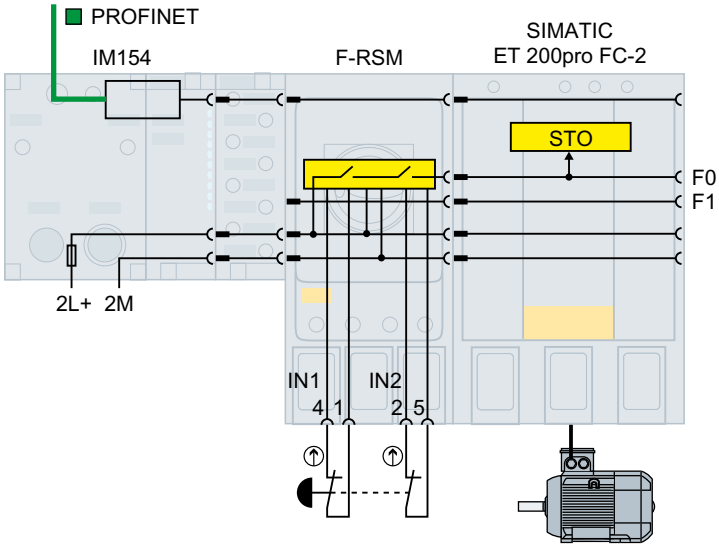


Figure 4-9 Directly controlling the safety functions in the ET 200pro FC-2 converter via the F-RSM module

SIMATIC ET 200pro FC-2 converters only have one internal failsafe digital input. You require the F-RSM module if you wish to control the ET 200pro FC-2 safety functions directly via a sensor.

The F-RSM module evaluates the sensor, and switches the "F0 rail" in the backplane bus of the ET-200pro system. The F0 rail selects a safety function in the inverter via the internal failsafe digital input.

Additional ways of installing F-RSM module are provided in the Internet:

Installation guidelines ET 200pro (http://support.automation.siemens.com/WW/view/en/26694409)

### 4.4.2.2 Series-connected electromechanical sensors

You can connect electromechanical sensors, for example, Emergency Stop command devices, position switches in series.

If the sensors are simultaneously opened, then sensor faults can only be identified with some restrictions.

If there is a risk of cross-circuits or short-circuits, the cables between the sensor and the inverter must be protected, for example, by routing them in a steel tube.

#### The inverter supplies the power supply voltage

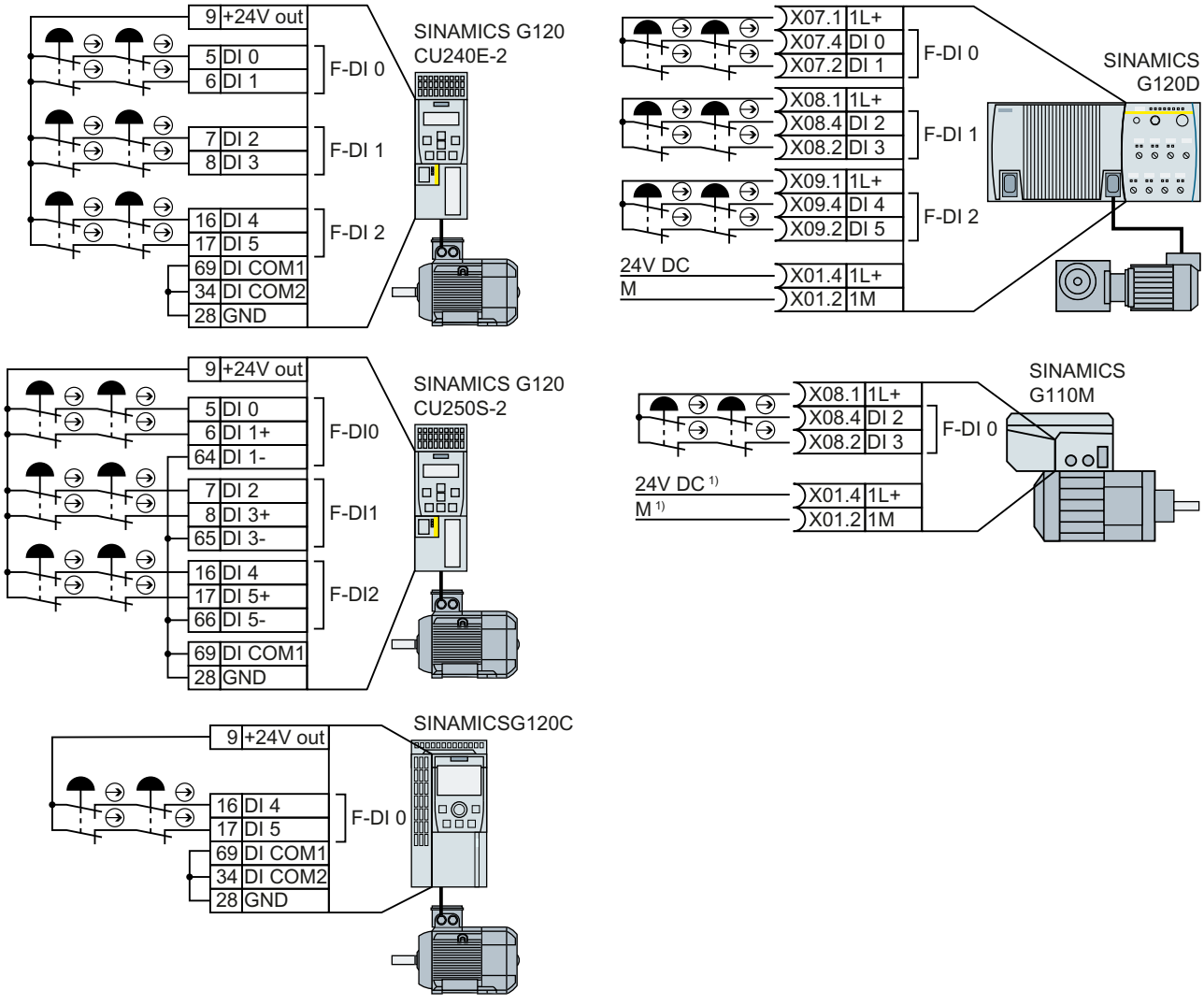


1) The 24 V supply is not required when using the G110M option "24 V power supply", article number 6SL3555-0PV00-0AA0

Figure 4-10 Connecting electromechanical sensors to the inverter power supply in series

## External power supply

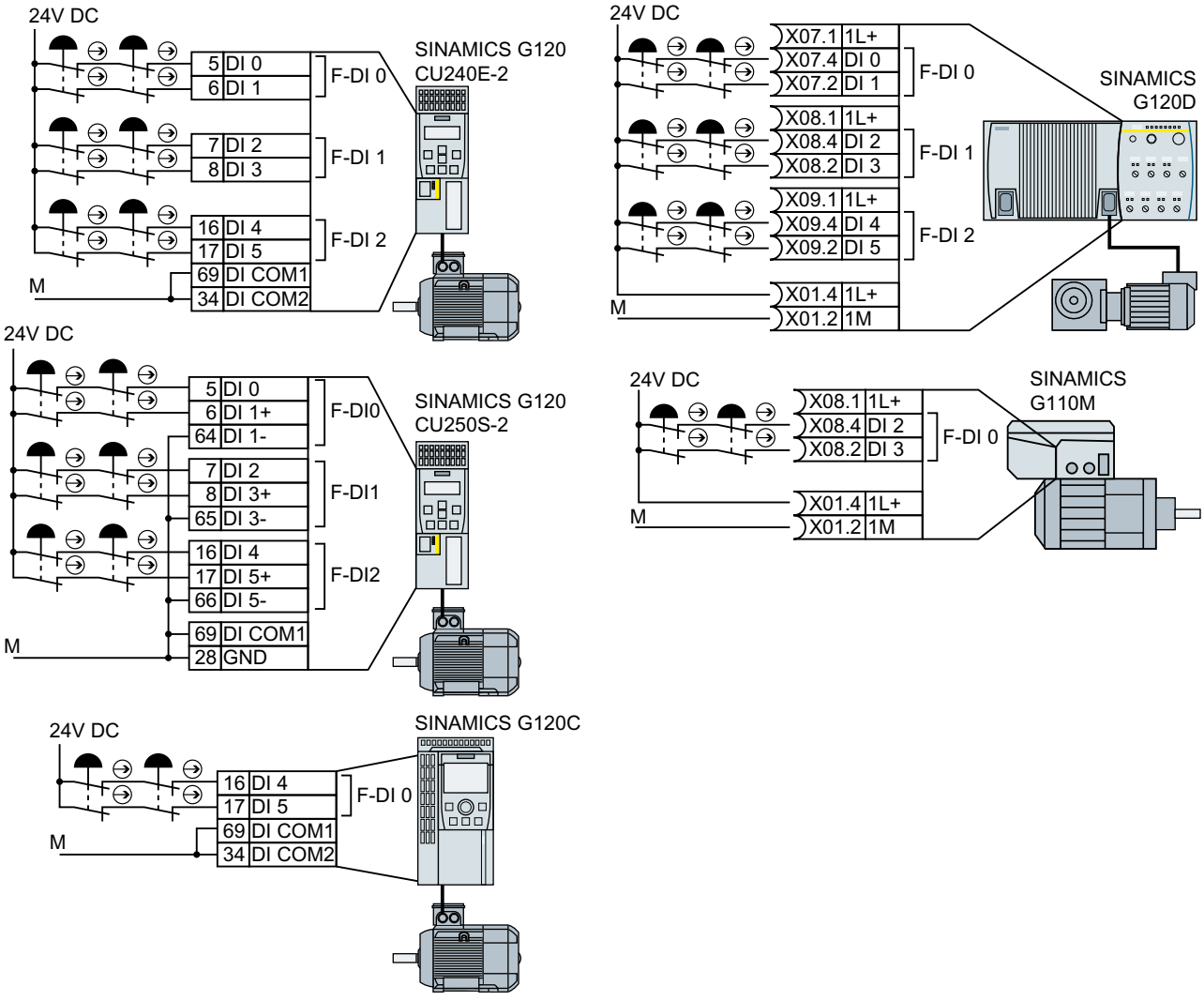


Figure 4-11 Connecting electromechanical sensors to an external power supply in series

## Further information

Further information about connecting electromechanical sensors in series is provided in the Internet:

- Several Emergency Stop command devices connected in series (https://support.industry.siemens.com/cs/ww/en/view/35444028)
- SIRIUS Safety Integrated application manual (https://support.industry.siemens.com/cs/de/en/view/81366718)

### 4.4.2.3 Controlling several inverters in parallel using electromechanical sensors

You may activate the safety functions of several inverters simultaneously with one or several series-connected safety sensors.

If there is a risk of cross-circuits or short-circuits, the cables between the sensor and the inverter must be protected, for example, by routing them in a steel tube.

#### The inverter supplies the power supply voltage

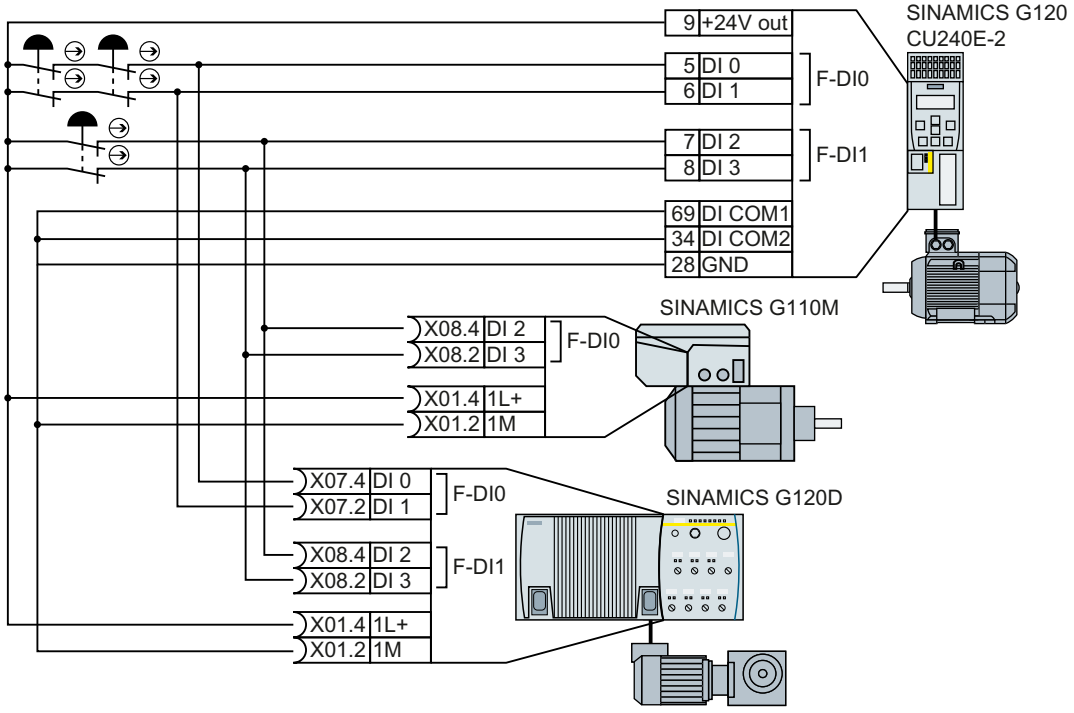


Figure 4-12 Example for controlling several inverters in parallel with the power supply from the inverter

## External power supply

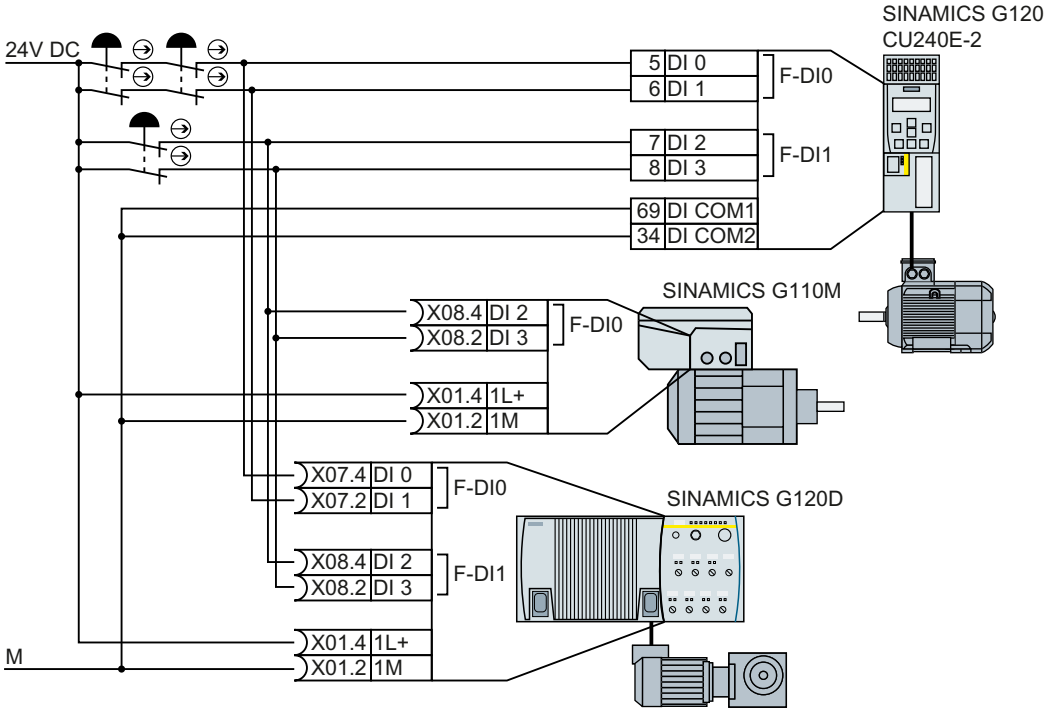


Figure 4-13 Example for controlling several inverters in parallel with an external power supply

### 4.4.2.4 SIRIUS 3SK1 safety relay

The wiring examples listed below are implemented using safety relays with relay enable circuits. Safety relays with semiconductor enable circuits can also be used.

The diagrams only show the interconnection between the safety relay and a SINAMICS G120 inverter as example.

Additional information on wiring a safety relay is provided in the product documentation in the Internet:

SIRIUS 3SK1 safety relays (https://support.industry.siemens.com/cs/ww/en/ps/16381/man).

#### Components in the same control cabinet

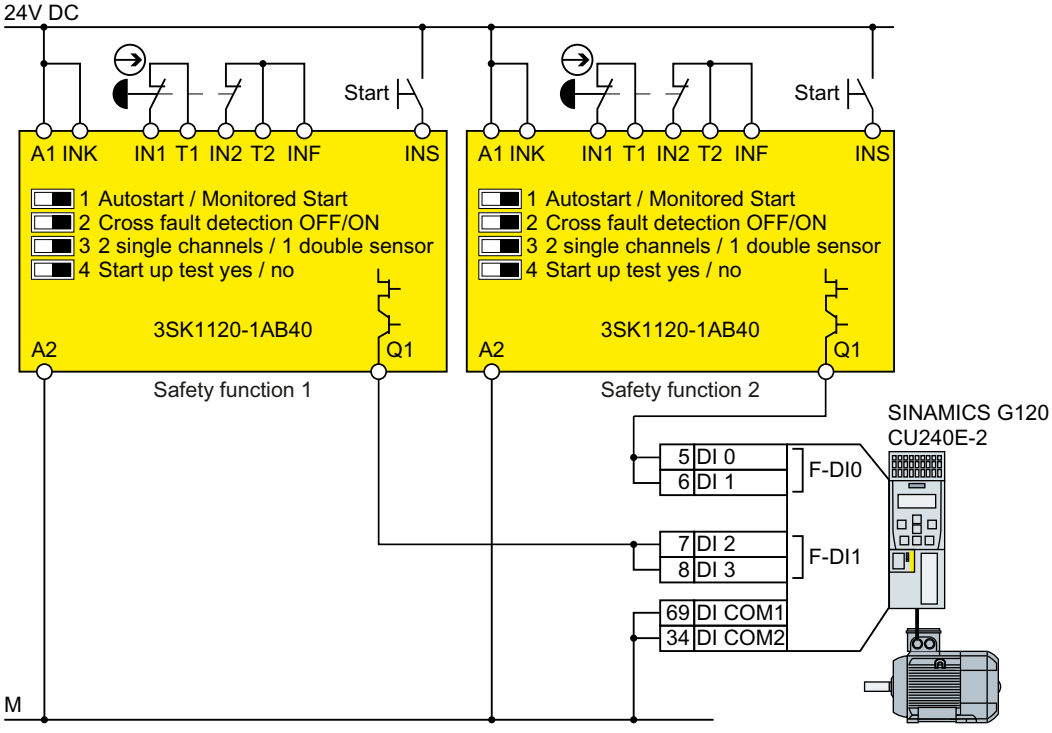


Figure 4-14 Wiring inverter and safety relay in an electrical cabinet using SINAMICS G120 with CU240E-2 as example

A control cabinet that has been designed and wired correctly does not contain any damaged wiring or cross circuits.

Under the assumption that the upstream, preprocessing device switches the output being used twice, within a control cabinet, you can wire up the safety relay and the inverter through a single-channel cable connection. At the inverter, you must connect both terminals of the failsafe digital input with one another.

## Components in separate control cabinets

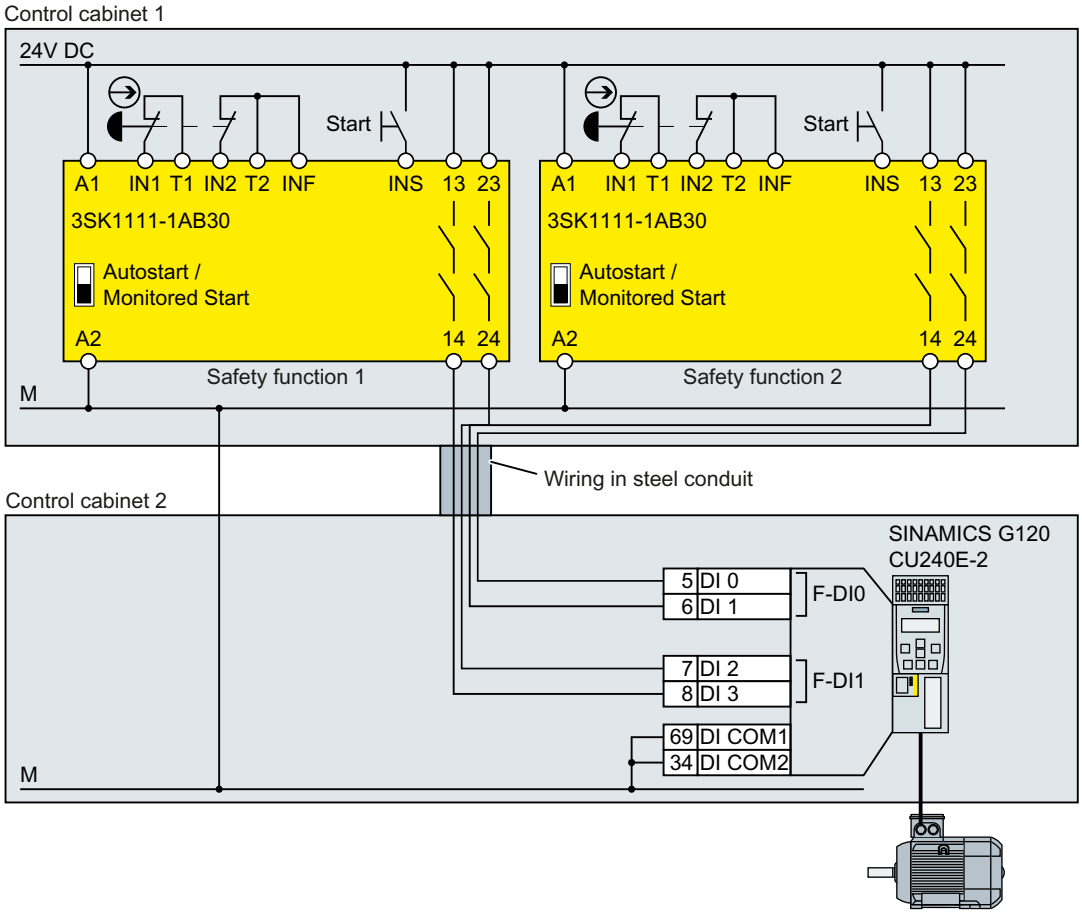


Figure 4-15 Wiring inverter and safety relay in separate electrical cabinets using SINAMICS G120 with CU240E-2 as example

For configurations in separate control cabinets, the cables between the safety relay and the failsafe digital inputs of the inverter must be protected against cross circuits and short-circuits.

### 4.4.2.5 3RK3 Modular Safety System

You can use the following outputs to control the failsafe digital inputs in the inverter:

- The failsafe digital outputs in the central units of the 3RK3 modular safety system
- The failsafe digital outputs in the EM 2/4F-DI 2F-DO expansion module.
- The failsafe digital outputs in the EM 4F-DO expansion module.
- The failsafe relay outputs in the EM 4/8F-RO expansion module
- Two individual relay contacts of the EM 2/4F-DI 1/2F-RO expansion module.

The diagrams only show the wiring between the 3RK3 modular safety system and as example, a SINAMICS G120 inverter.

Additional information on wiring the 3RK3 modular safety system is provided in the Internet:

SIRIUS 3RK3 modular safety system manual (https://support.industry.siemens.com/cs/ww/en/view/26493228)

#### Components in the same control cabinet

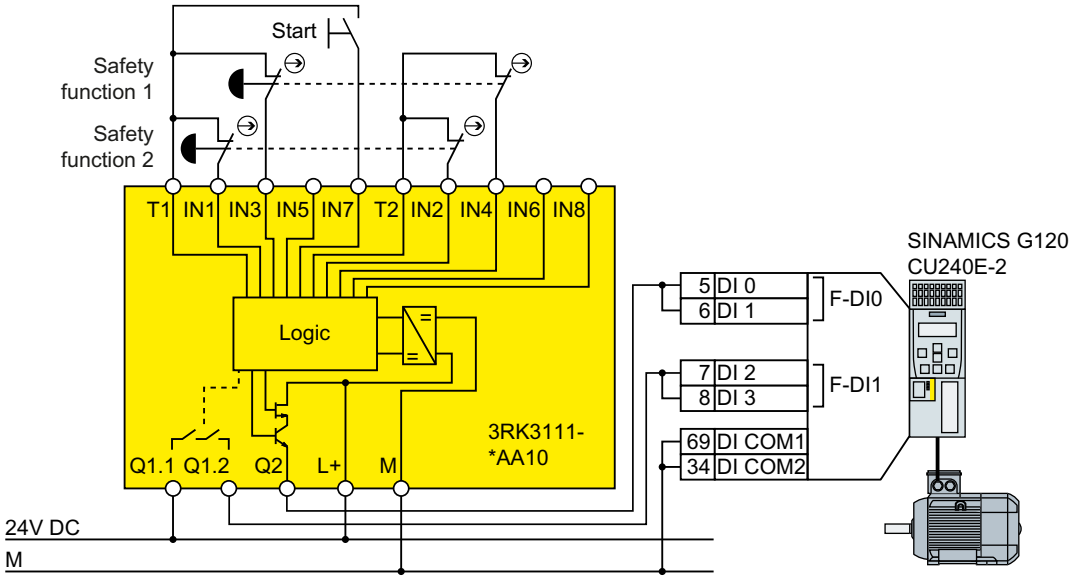


Figure 4-16 Connecting the modular safety system in a control cabinet using a SINAMICS G120 with CU240E-2 as example

A control cabinet that has been designed and wired correctly does not contain any damaged wiring or cross circuits.

In the upstream, preprocessing device, if you only use outputs with two switches in series, then it is permissible that you wire the safety relay to the inverter via a single-channel cable connection. At the inverter, you must connect both terminals of the failsafe digital input with one another.

## Components in separate control cabinets

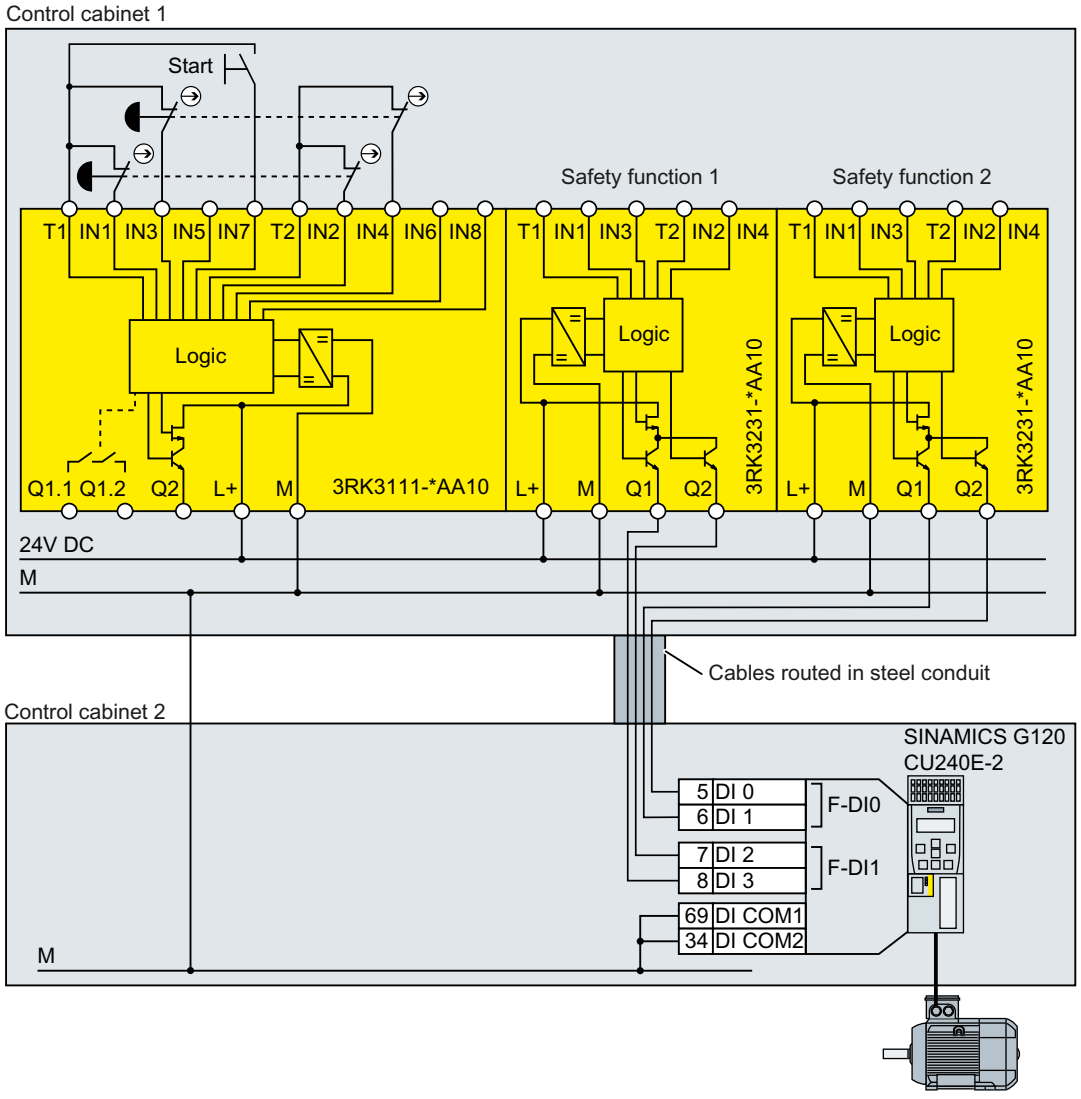


Figure 4-17 Connecting the modular safety system in separate electrical cabinets using SINAMICS G120 with CU240E-2 as example

For configurations and designs in separate control cabinets, route cables between the modular safety system and the inverter so that they are protected against cross circuits and short circuits.

If you wish to use the failsafe digital outputs of the 3RK3 central unit for a two-channel signal transfer, then you must adapt the discrepancy monitoring of the inverter to the different switching times of electronic output and relay contact.

### 4.4.2.6 Sensors with OSSD outputs

If there is a risk of cross-circuits or short-circuits, the cables between the sensor and the inverter must be protected, for example, by routing them in a steel tube.

#### The inverter supplies the power supply voltage

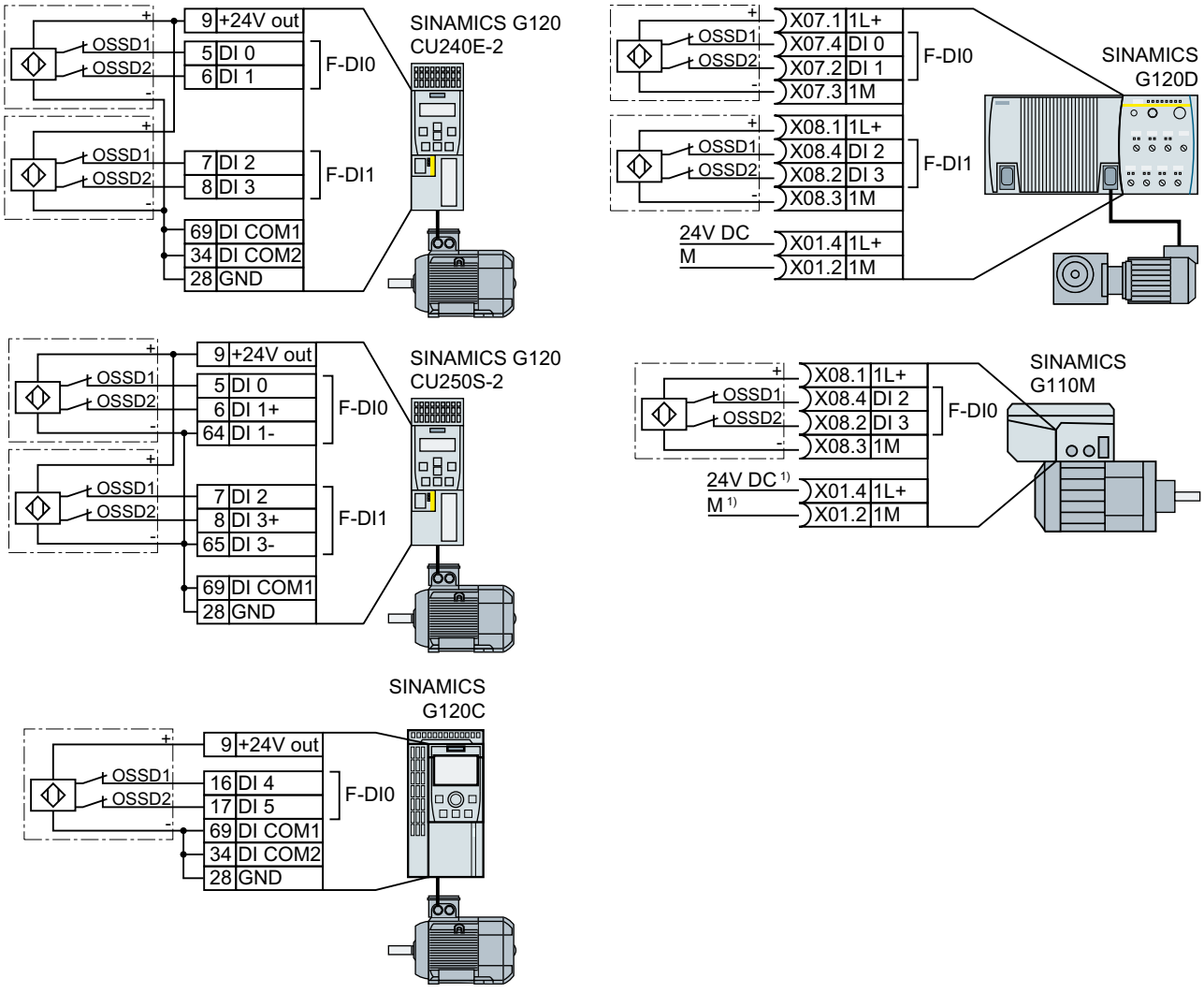


1) The 24 V supply is not required when using the G110M option "24 V power supply", article number 6SL3555-0PV00-0AA0

Figure 4-18 Connecting a sensor with OSSD outputs, power supply from the inverter

## External power supply

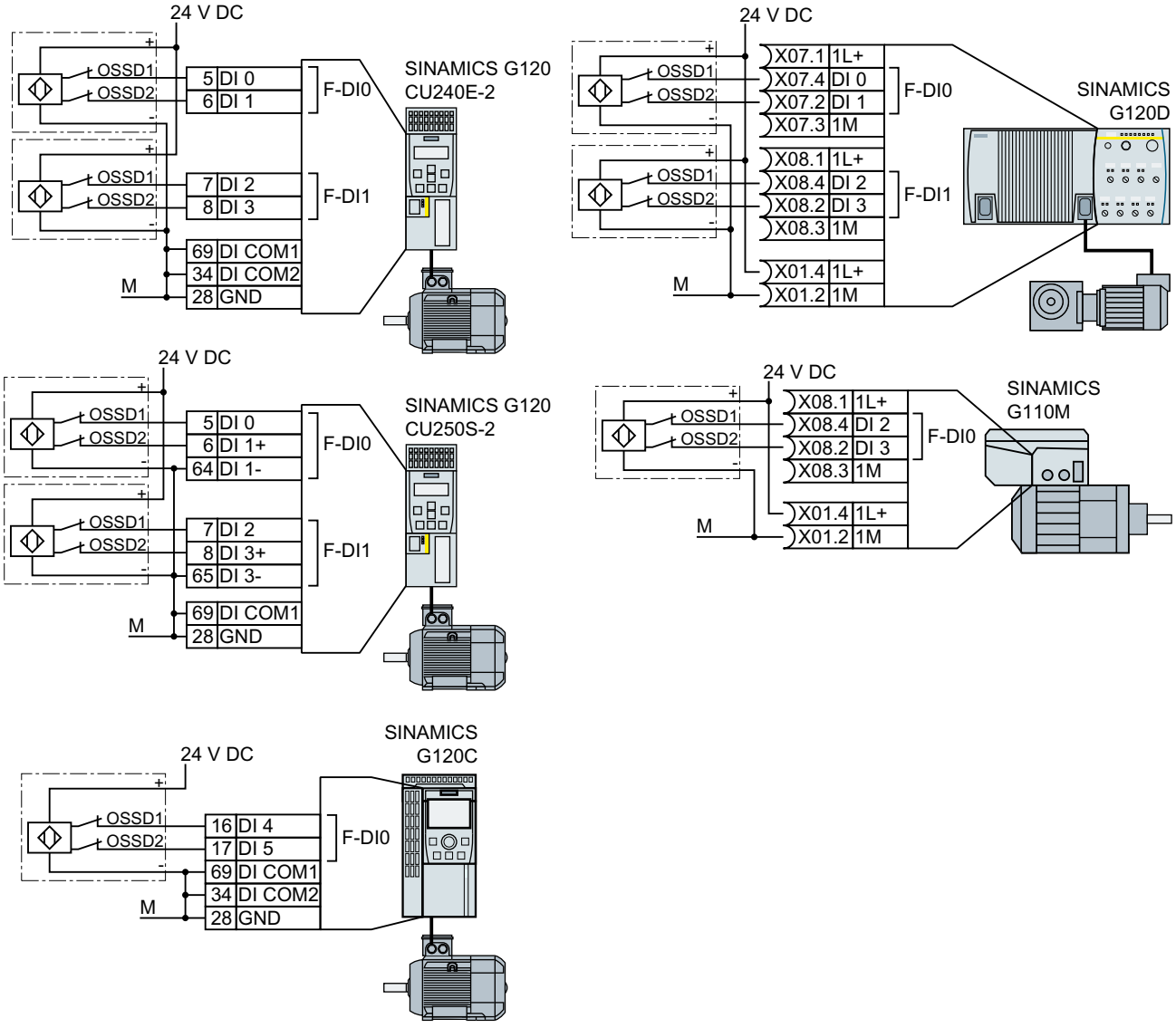


Figure 4-19 Connecting a sensor with OSSD outputs, external power supply

### 4.4.2.7 SIMATIC I/O modules

The diagrams only show the interconnection between the SIMATIC I/O modules and an inverter shown as example. You can find additional information about the I/O modules in the Internet

- S7-300 (https://support.industry.siemens.com/cs/ww/en/view/19026151)
- S7-1500 (https://support.industry.siemens.com/cs/ww/en/view/86140384)
- ET 200S (https://support.industry.siemens.com/cs/ww/en/view/12490437)
- ET 200SP (https://support.industry.siemens.com/cs/ww/en/view/84133942)
- ET 200pro (https://support.industry.siemens.com/cs/ww/en/view/22098524)

#### Components in the same control cabinet, PP-switching outputs

A control cabinet that has been designed and wired correctly does not contain any damaged wiring or cross circuits.

As a consequence, for PP-switching failsafe digital outputs, in an electrical cabinet you may connect the inverter to the I/O module through a single channel cable connection. At the inverter, you must connect both terminals of the failsafe digital input with one another.

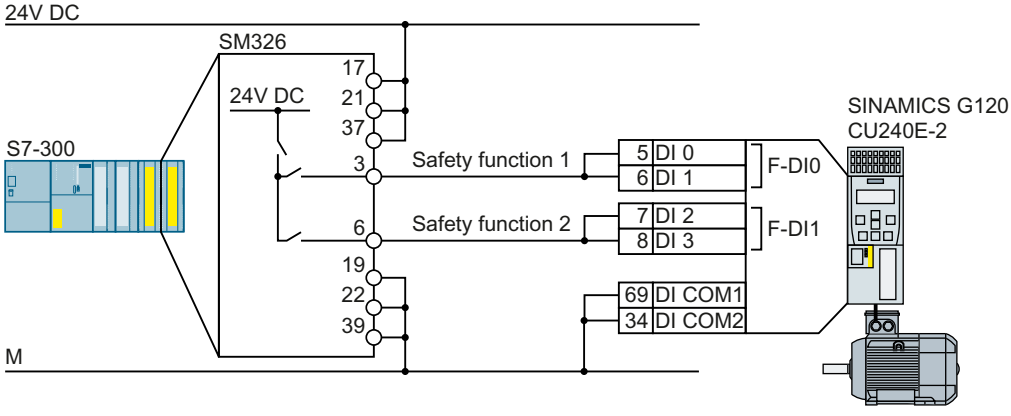


Figure 4-20 Connecting an SM326 module using a SINAMICS G120 with CU240E-2 as example

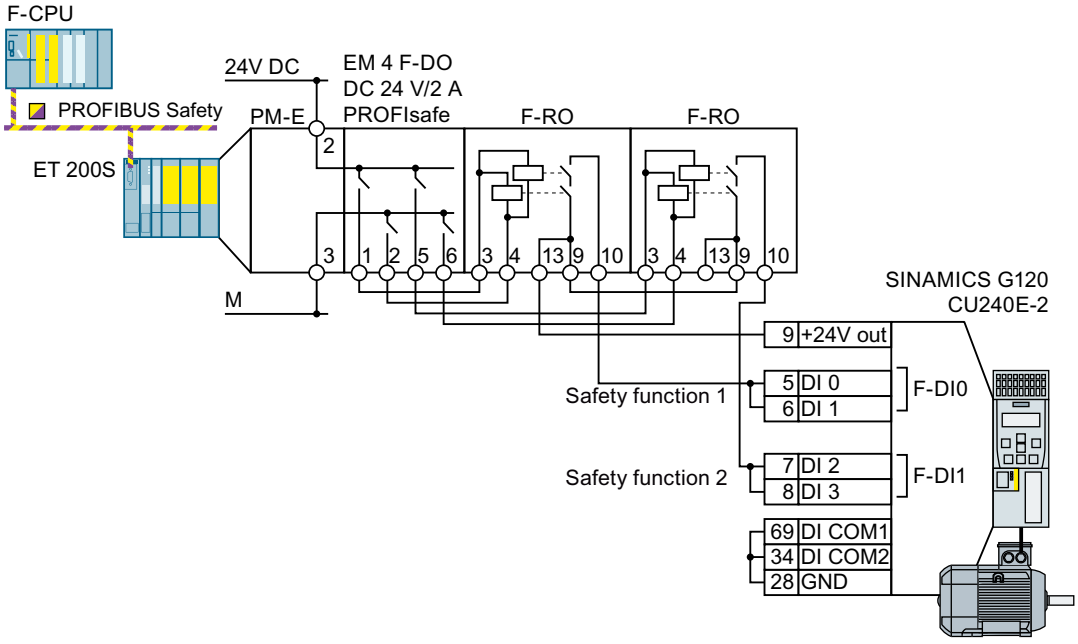


Figure 4-21 Connecting an ET 200S module using a SINAMICS G120 with CU240E-2 as example

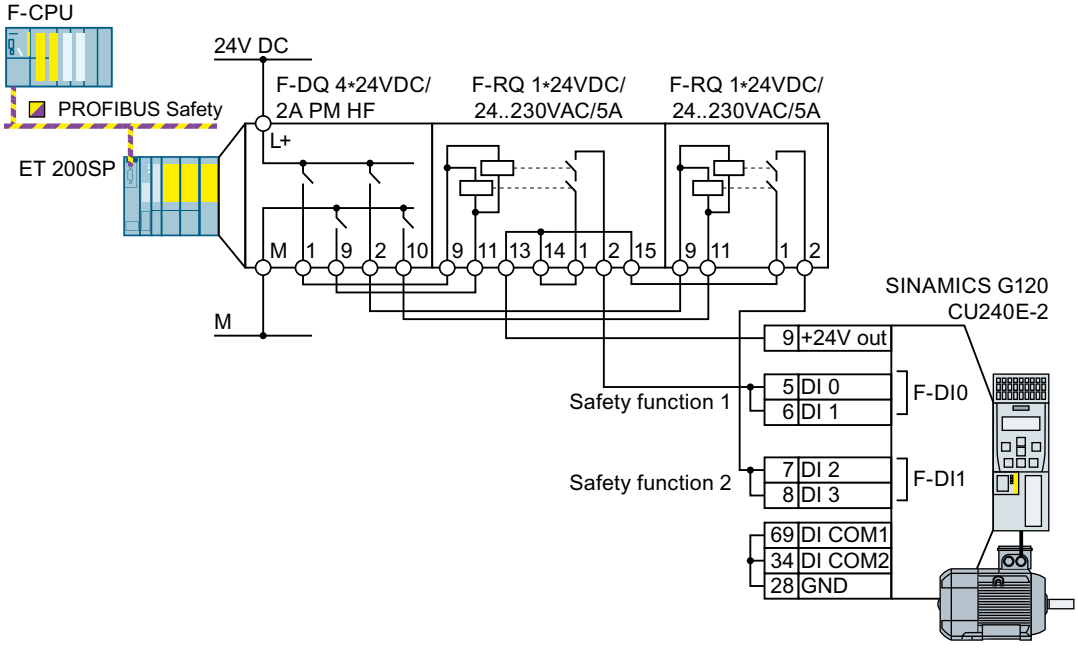


Figure 4-22 Connecting an ET 200SP module using a SINAMICS G120 with CU240E-2 as example

## Components in the same control cabinet, PP-switching outputs

You must use a two-channel cable connection when connecting PM-switching failsafe digital outputs to a failsafe digital input.

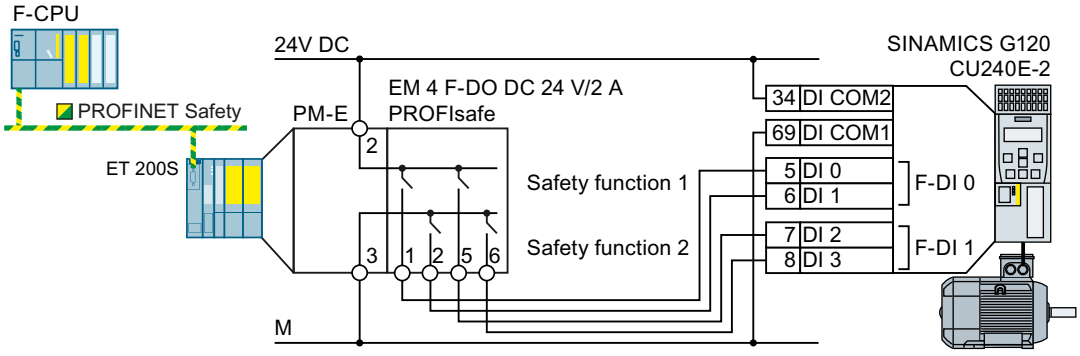


DI COM1 Reference potential for digital inputs DI 0 and DI 2

DI COM2 Reference potential for digital inputs DI 1 and DI 3

Figure 4-23 Connecting PM switching ET 200S outputs using a SINAMICS G120 with CU240E-2 as example

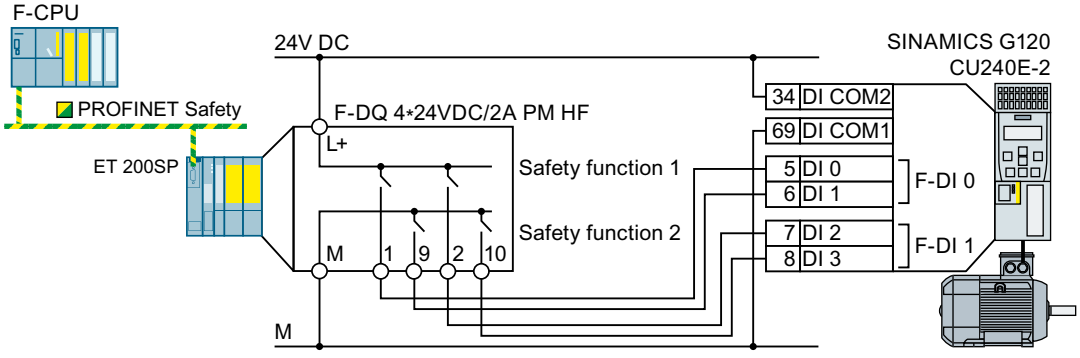


[1] The wiring of the ET 200SP shows as example, the supply of a new potential group when using a bright base unit.

DI COM1 Reference potential for digital inputs DI 0 and DI 2

DI COM2 Reference potential for digital inputs DI 1 and DI 3

Figure 4-24 Connecting PM-switching ET 200SP outputs using a SINAMICS G120 with CU240E-2 as example

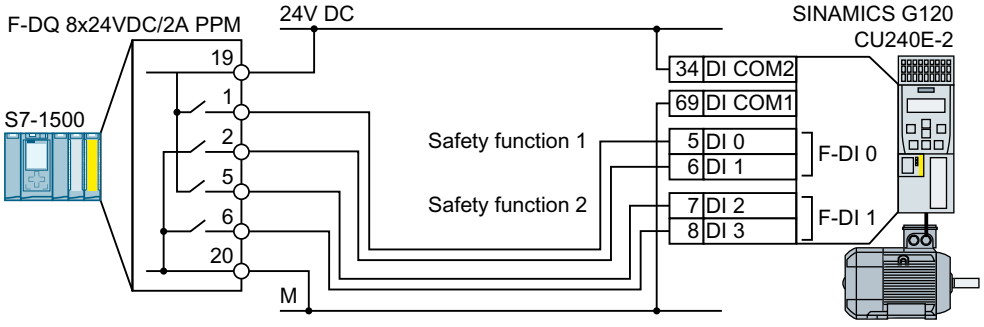


DI COM1 Reference potential for digital inputs DI 0 and DI 2

DI COM2 Reference potential for digital inputs DI 1 and DI 3

Figure 4-25 Connecting PM-switching S7-1500 outputs using a SINAMICS G120 with CU240E-2 as example

## Components in separate control cabinets

A two-channel cable connection is required when installed in separate electrical cabinets. You must protect the cables between the I/O modules and the inverter against cross and short-circuits - or ensure that a cross or short-circuit results in a discrepancy error.

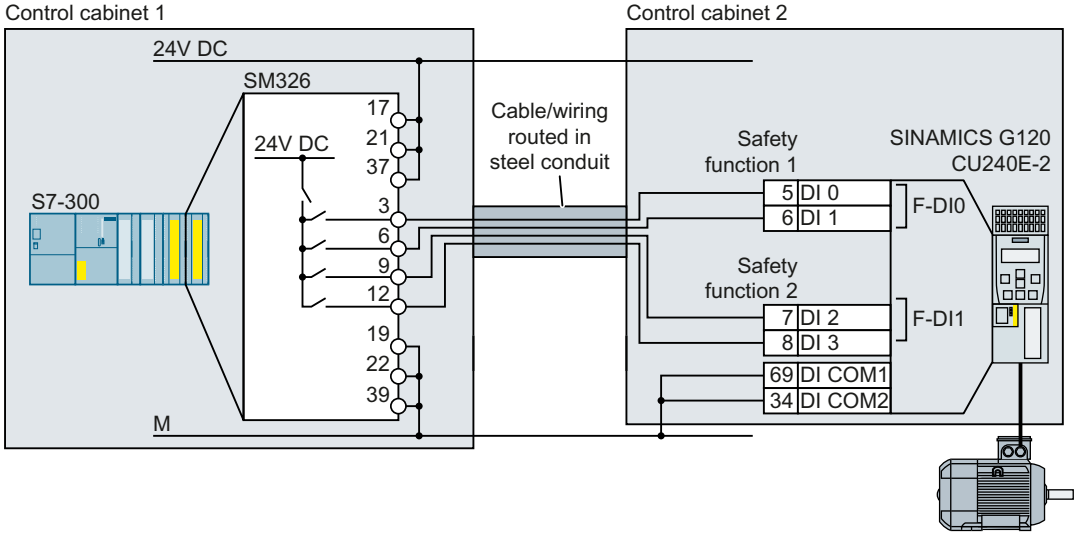


Figure 4-26 Connecting the PP switching module SM326 using a SINAMICS G120 with CU240E-2 as example

## Components not in a control cabinet

A two-channel cable connection is required when connecting components not installed in a control cabinet to a control cabinet. You must protect the cables between the I/O modules and the inverter against cross and short-circuits - or ensure that a cross or short-circuit results in a discrepancy error.

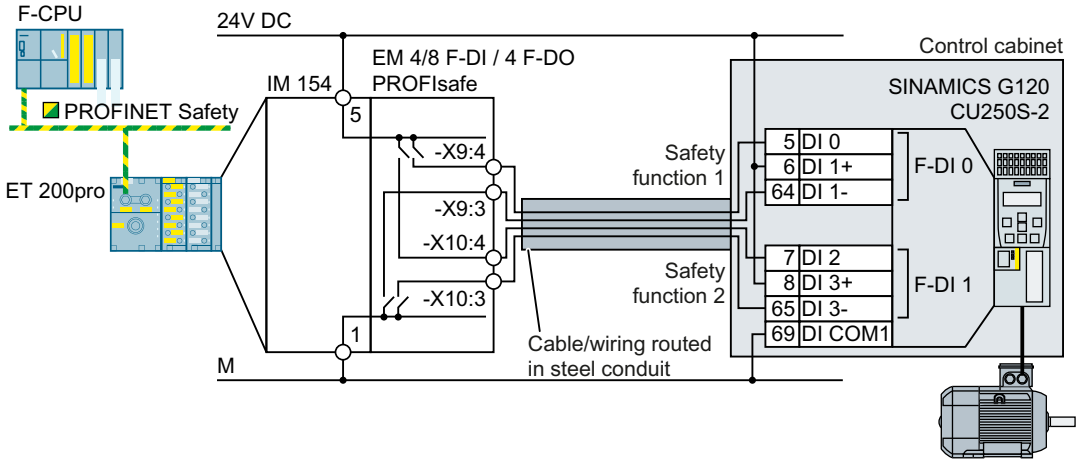


SINAMICS G120D requires a PP-switching failsafe output.

DI COM1 Reference potential for digital inputs DI 0 and DI 2

Figure 4-27 Connecting PM-switching ET 200pro outputs using a SINAMICS G120 with CU250S-2 as example

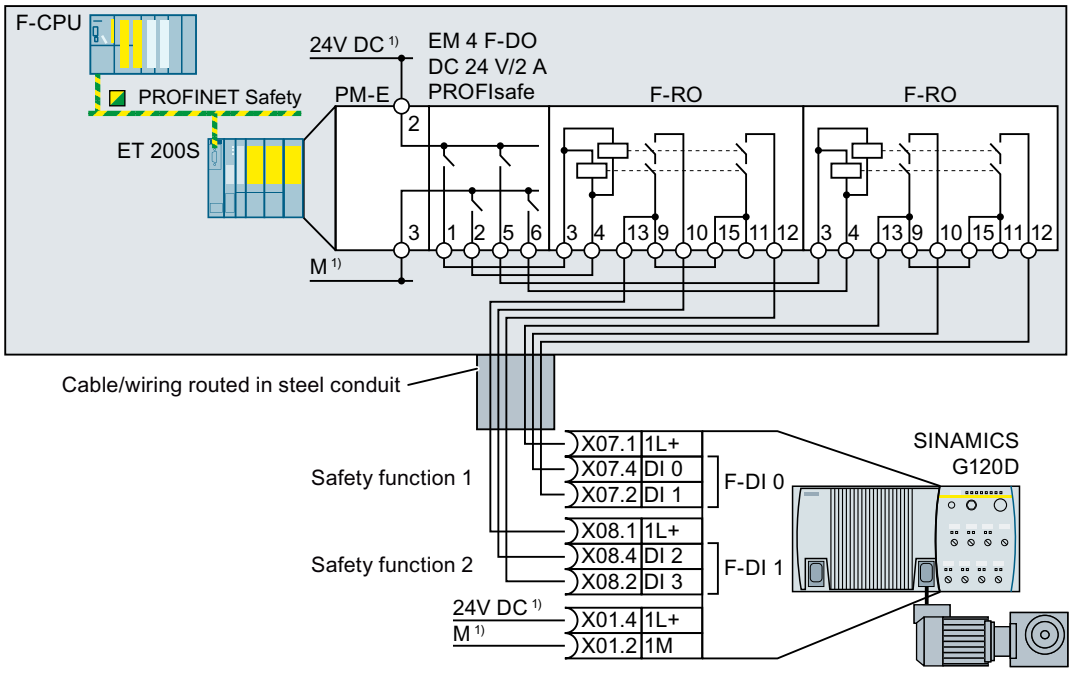


SINAMICS G120D requires a PP-switching failsafe output.

1) You may operate the inverter and the ET 200S with different 24-V supplies - as well as with the same 24-V supply.

Figure 4-28 Connecting ET 200S modules using a SINAMICS G120D as example

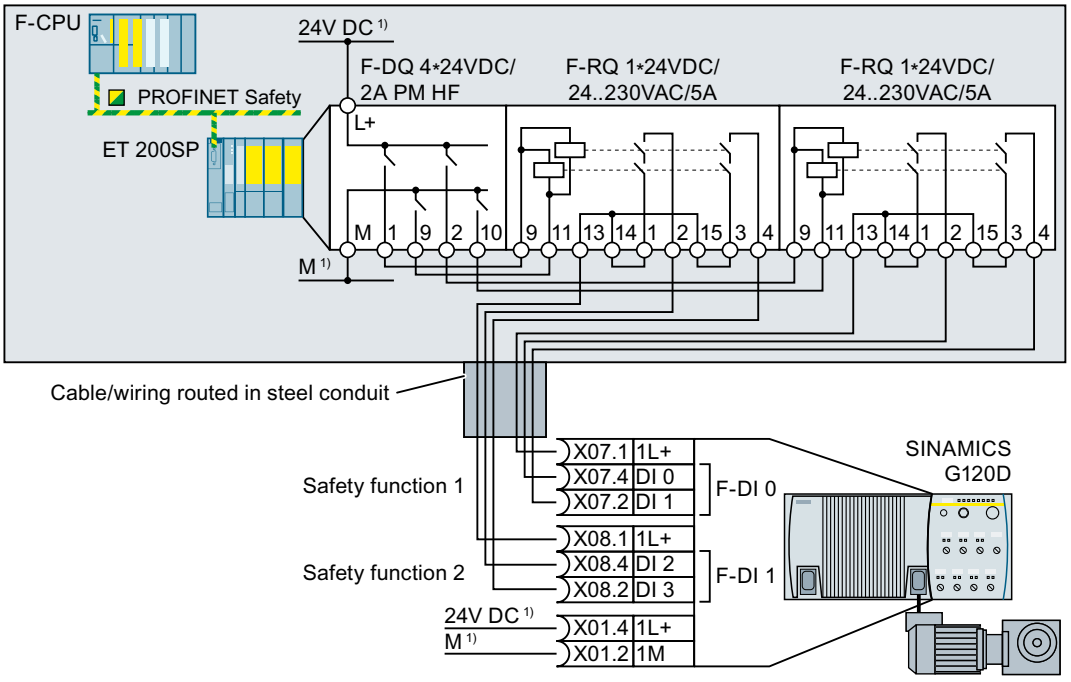


SINAMICS G120D requires a PP-switching failsafe output.

1) The wiring of the ET 200SP shows as example, the supply of a new potential group when using a bright base unit.

You may operate the inverter and the ET 200SP with different 24-V supplies - as well as with the same 24-V supply.

Figure 4-29 Connecting ET 200SP modules using a SINAMICS G120D as example

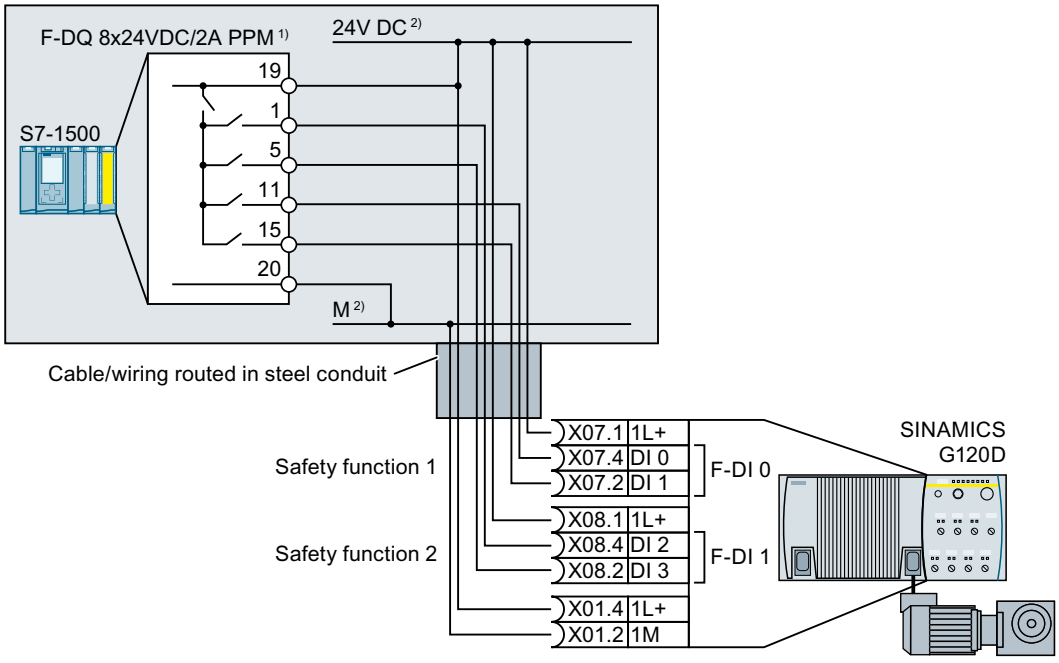


SINAMICS G120D requires a PP-switching failsafe output.

1) The F-DQ module must be configured to be PP-switching.

2) You may operate the inverter and the S7-1500 with different 24-V supplies - as well as with the same 24-V supply.

Figure 4-30 Connecting the S7-1500 using a SINAMICS G120D as example

## 4.4.3 Wiring examples according to SIL 3 and PL e

Wiring examples for the STO function corresponding to PL e according to EN 13849-1 and SIL 3 according to IEC 61508 are provided on the following pages.

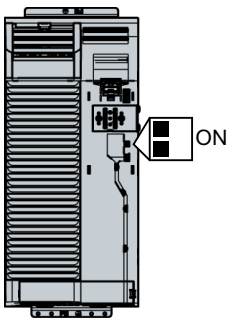


Preconditions when using the STO safety function according to SIL 3:

- You are using a PM240-2 or PM240P-2, FSD … FSF Power Module
- You control the STO safety function using the terminals of the PM240-2 or PM240P-2 Power Module.
- Both switches on the Power Module are in the “ON” position.

If, in an example, two or more terminals of the inverter are connected together, then you must connect jumpers that are as short as possible directly at the terminals.

### 4.4.3.1 Electromechanical sensor

#### Connecting an electromechanical sensor

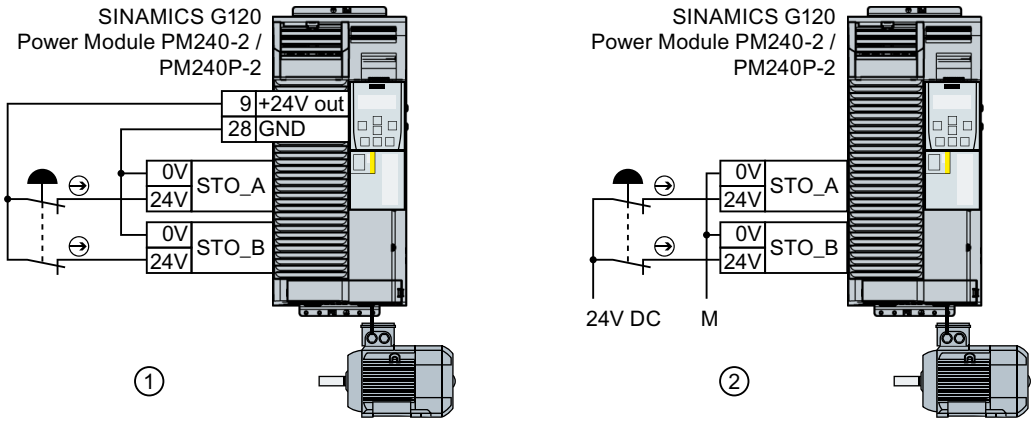


① Power supply voltage from terminal 9 of the Control Unit

② External power supply

Figure 4-31 Connecting an electromechanical sensor

If there is a risk of cross-circuits or short-circuits, the cables between the sensor and the inverter must be protected, for example, by routing them in a steel tube.

#### Connecting several electromechanical sensors in series

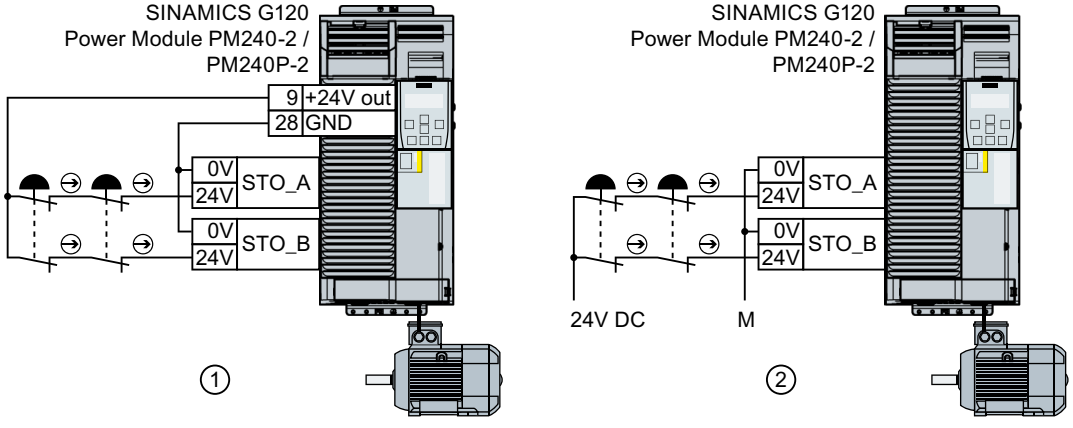


① The inverter provides the supply voltage

② External power supply

Figure 4-32 Connecting several electromechanical sensors in series

You can connect electromechanical sensors, for example, Emergency Stop command devices, position switches in series.

If the sensors are simultaneously opened, then sensor faults can only be identified with some restrictions. In this case, you must individually test the function of each sensor at regular intervals and at least once every three months.

If there is a risk of cross-circuits or short-circuits, the cables between the sensor and the inverter must be protected, for example, by routing them in a steel tube.

## Controlling several inverters simultaneously

You may control the safety functions of several inverters simultaneously with one or several safety sensors connected in series.

If there is a risk of cross-circuits or short-circuits, the cables between the sensor and the inverter must be protected, for example, by routing them in a steel tube.

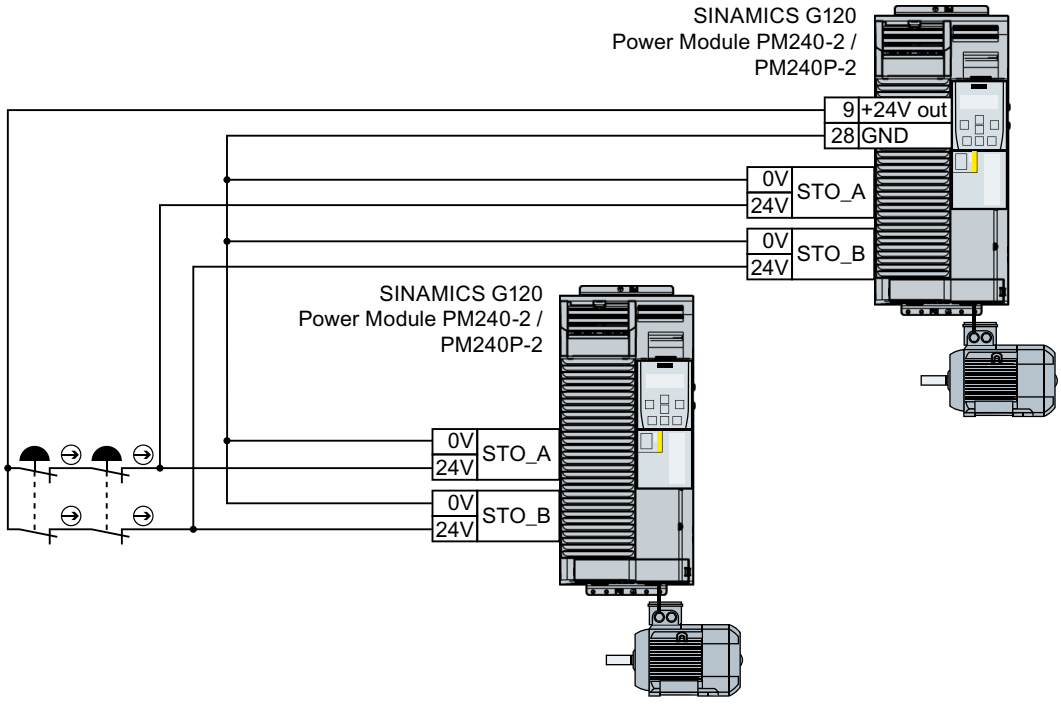


Figure 4-33 Controlling several inverters in parallel with the power supply from the inverter

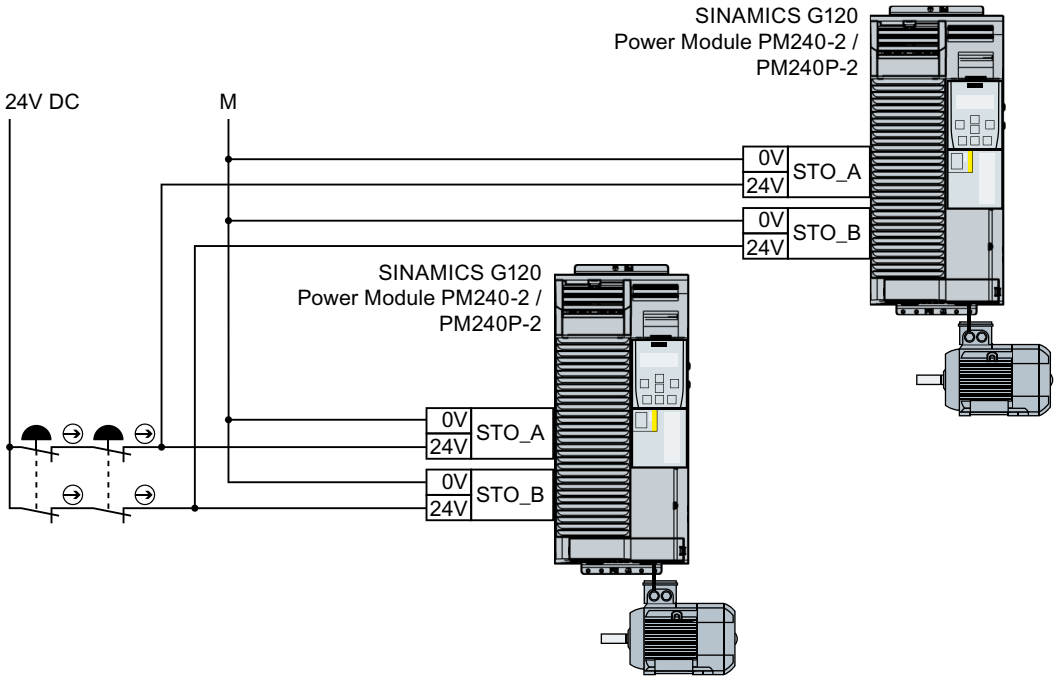


Figure 4-34 Controlling several inverters in parallel with an external power supply

### 4.4.3.2 SIRIUS 3SK1 safety relay

The wiring examples listed below are implemented using safety relays with relay enable circuits. Safety relays with semiconductor enable circuits can also be used.

The diagrams only show how the safety relay and inverter are interconnected.

You will find additional information about the safety related on the Internet:

SIRIUS 3SK1 safety relays (https://support.industry.siemens.com/cs/ww/en/ps/16381/man)

#### Components in the same control cabinet

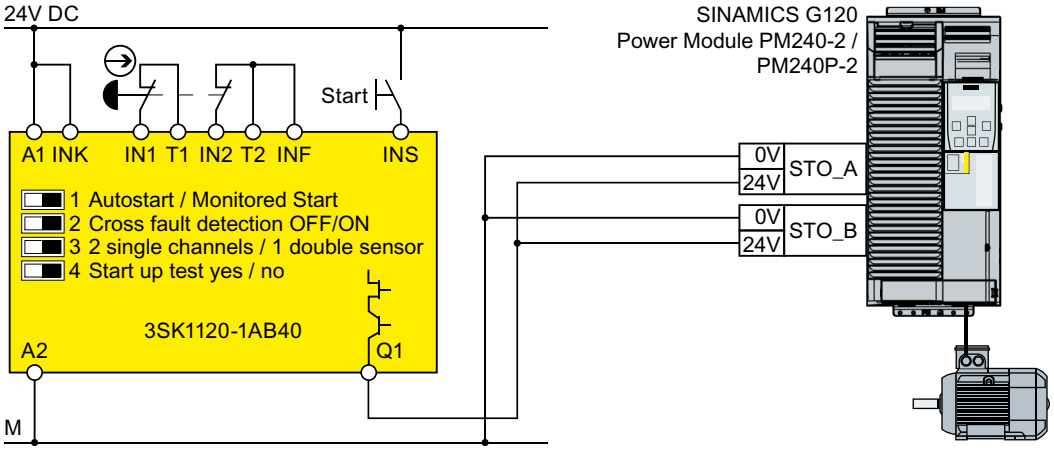


Figure 4-35 Wiring the inverter and safety relay within a control cabinet

A control cabinet that has been designed and wired correctly does not contain any damaged wiring or cross circuits.

Under the assumption that the upstream, preprocessing device switches the output being used twice, within a control cabinet, you can wire up the safety relay and the inverter through a single-channel cable connection. At the inverter, you must connect both terminals of the failsafe digital input with one another.

## Components in separate control cabinets

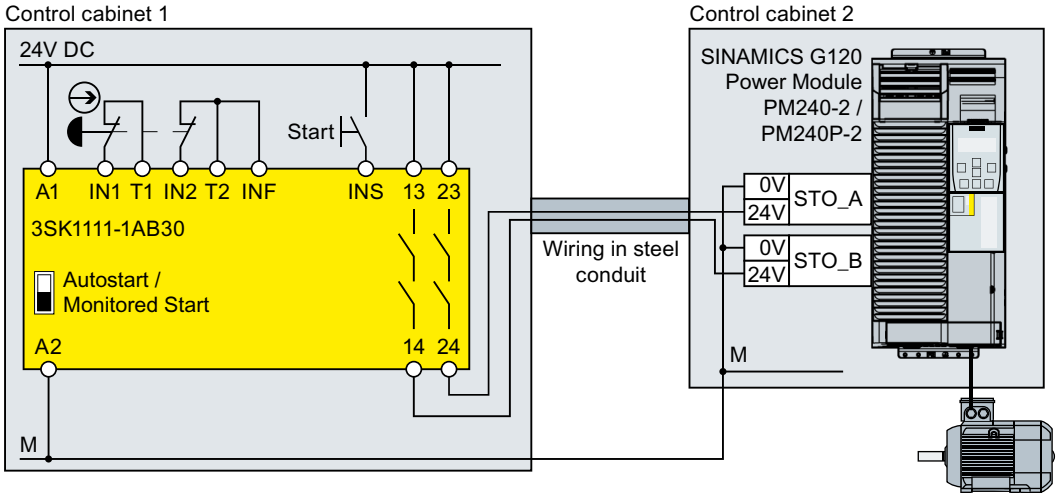


Figure 4-36 Wiring inverters and safety relays in separate control cabinets

For configurations in separate control cabinets, the cables between the safety relay and the failsafe digital inputs of the inverter must be protected against cross circuits and short-circuits.

### 4.4.3.3 3RK3 Modular Safety System

You can use the following outputs to control the failsafe digital inputs in the inverter:

- The failsafe digital outputs in the central units of the 3RK3 modular safety system
- The failsafe digital outputs in the EM 2/4F-DI 2F-DO expansion module.
- The failsafe digital outputs in the EM 4F-DO expansion module.
- The failsafe relay outputs in the EM 4/8F-RO expansion module
- Two individual relay contacts of the EM 2/4F-DI 1/2F-RO expansion module.

The diagrams only show the wiring between the 3RK3 modular safety system and the inverter.

You can find additional information on the 3RK3 modular safety system on the Internet:

SIRIUS 3RK3 modular safety system manual (https://support.industry.siemens.com/cs/ww/en/view/26493228)

#### Components in the same control cabinet

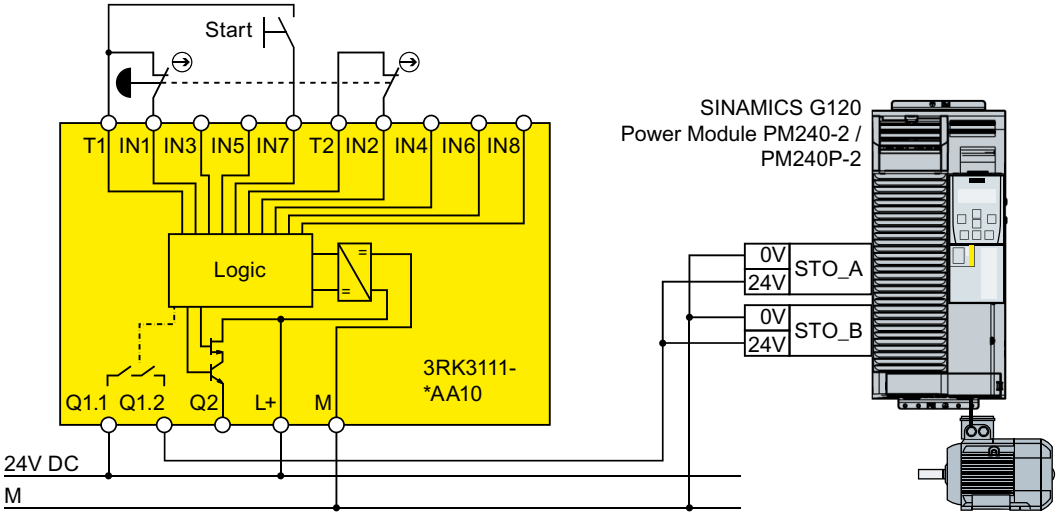


Figure 4-37 Wiring inverters and modular safety system within one control cabinet

A control cabinet that has been designed and wired correctly does not contain any damaged wiring or cross circuits.

In the upstream, preprocessing device, if you only use outputs with two switches in series, then it is permissible that you wire the safety relay to the inverter via a single-channel cable connection. At the inverter, you must connect both terminals of the failsafe digital input with one another.

## Components in separate control cabinets

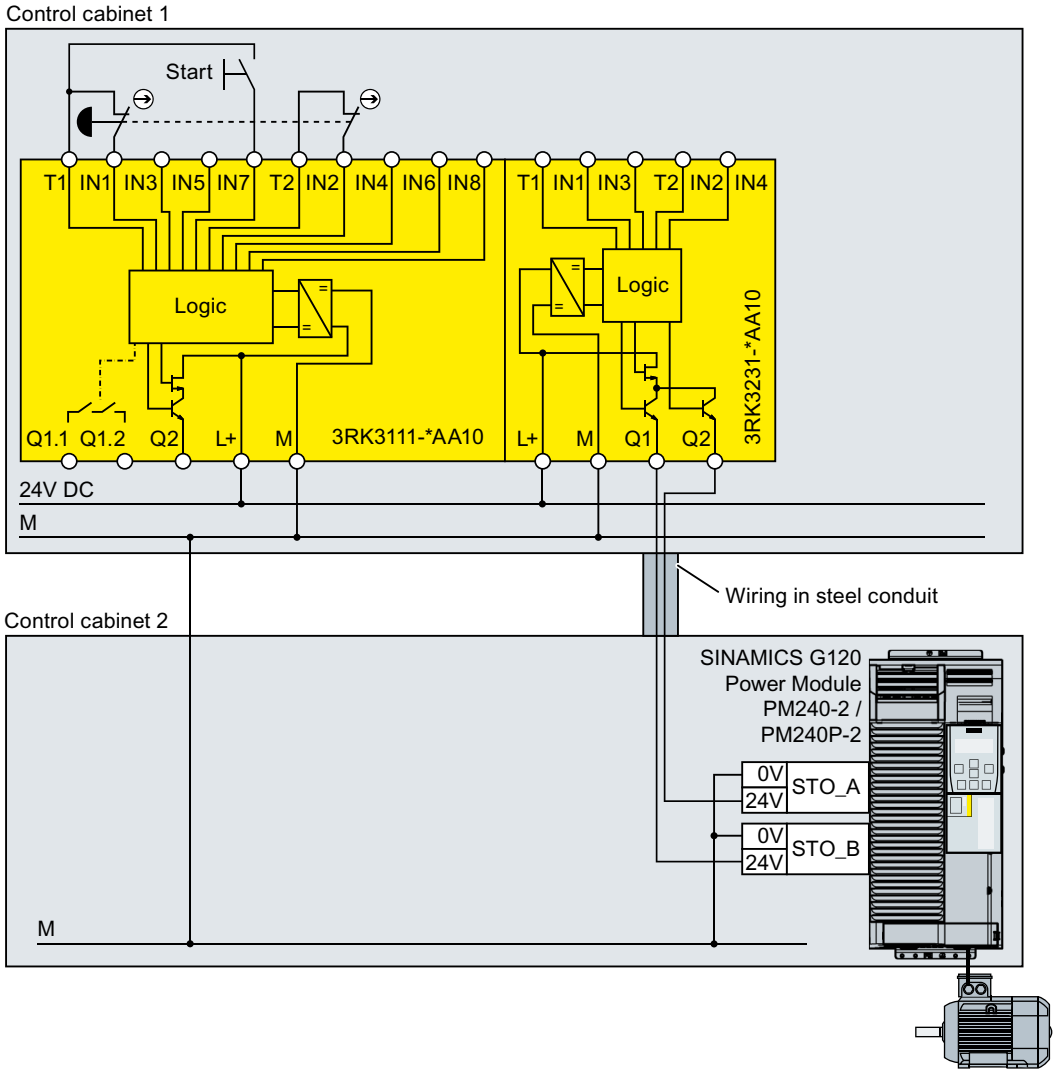


Figure 4-38 Wiring inverters and modular safety systems in separate control cabinets

For configurations and designs in separate control cabinets, route cables between the modular safety system and the inverter so that they are protected against cross circuits and short circuits.

If you wish to use the failsafe digital outputs of the 3RK3 central unit for a two-channel signal transfer, then you must adapt the discrepancy monitoring of the inverter to the different switching times of electronic output and relay contact.

### 4.4.3.4 SIMATIC I/O modules

The diagrams only show the interconnection between the SIMATIC I/O modules and an inverter shown as example. You can find additional information about the I/O modules in the Internet

- S7-300 (https://support.industry.siemens.com/cs/ww/en/view/19026151)
- S7-1500 (https://support.industry.siemens.com/cs/ww/en/view/86140384)
- ET 200S (https://support.industry.siemens.com/cs/ww/en/view/12490437)
- ET 200SP (https://support.industry.siemens.com/cs/ww/en/view/84133942)
- ET 200pro (https://support.industry.siemens.com/cs/ww/en/view/22098524)

#### Components in the same control cabinet

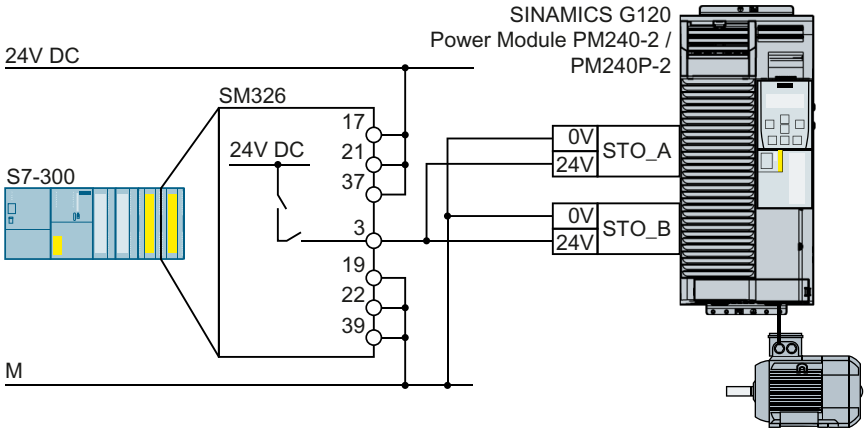


Figure 4-39 Connecting the PP switching module SM326

A control cabinet that has been designed and wired correctly does not contain any damaged wiring or cross circuits.

As a consequence, for PP-switching failsafe digital outputs, in an electrical cabinet you may connect the inverter to the I/O module through a single channel cable connection. At the inverter, you must connect both terminals of the failsafe digital input with one another.

You must use a two-channel cable connection when connecting PM-switching failsafe digital outputs to a failsafe digital input.

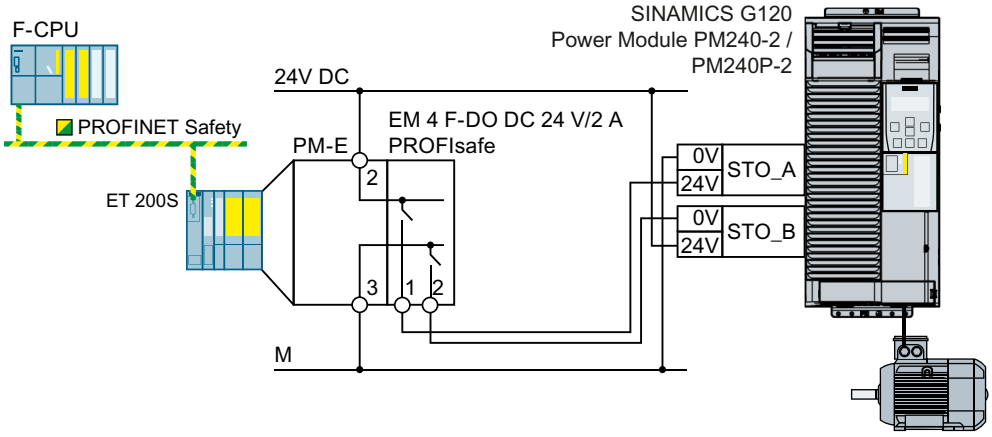


Figure 4-40 Connecting a PM-switching ET 200S module

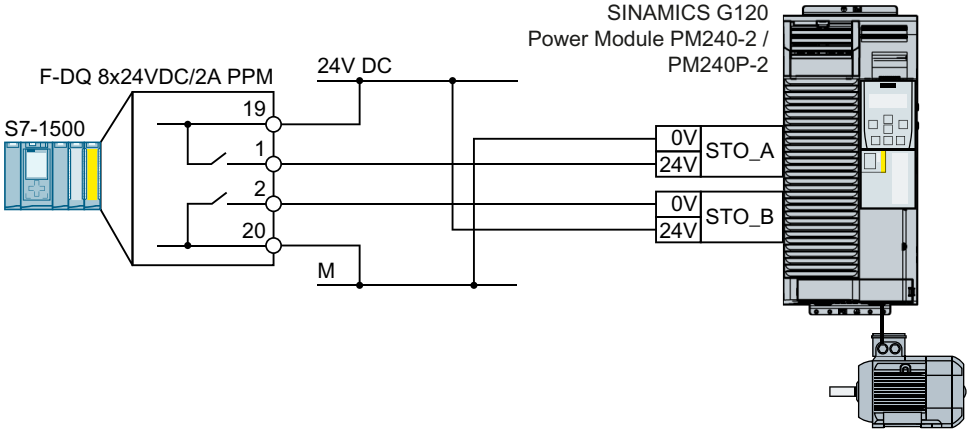


Figure 4-41 Connecting a PM-switching S7-1500 module

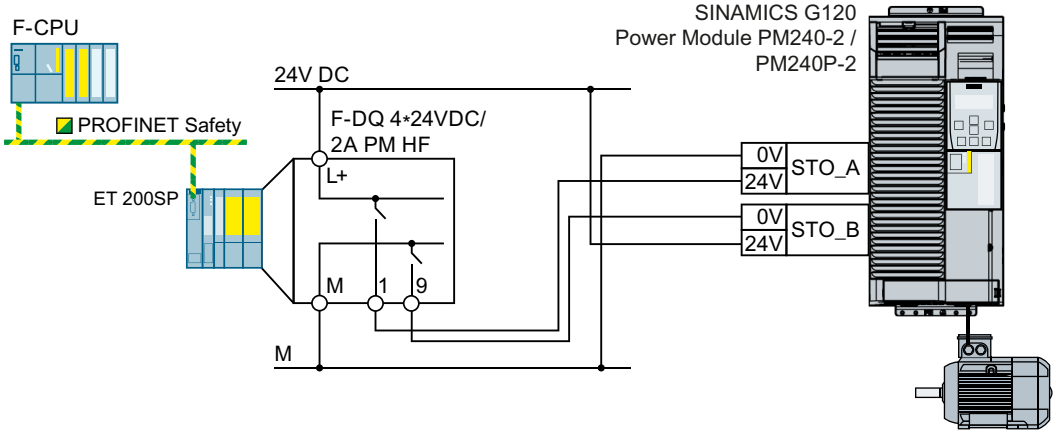


Figure 4-42 Connecting a PM-switching ET 200SP module

## Components in separate electrical cabinets or components not installed in an electrical cabinet

A two-channel cable connection is required when installed in separate electrical cabinets - or when connecting components not installed in an electrical cabinet to an electrical cabinet. You must protect the cables between the I/O modules and the inverter against cross and short-circuits - or ensure that a cross or short-circuit results in a discrepancy error.

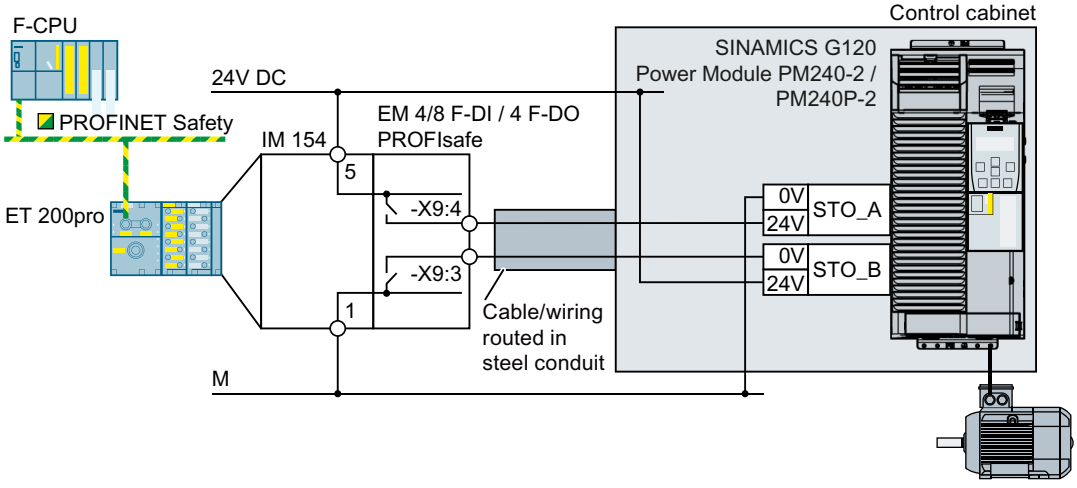


Figure 4-43 Connecting a PM-switching ET 200pro module

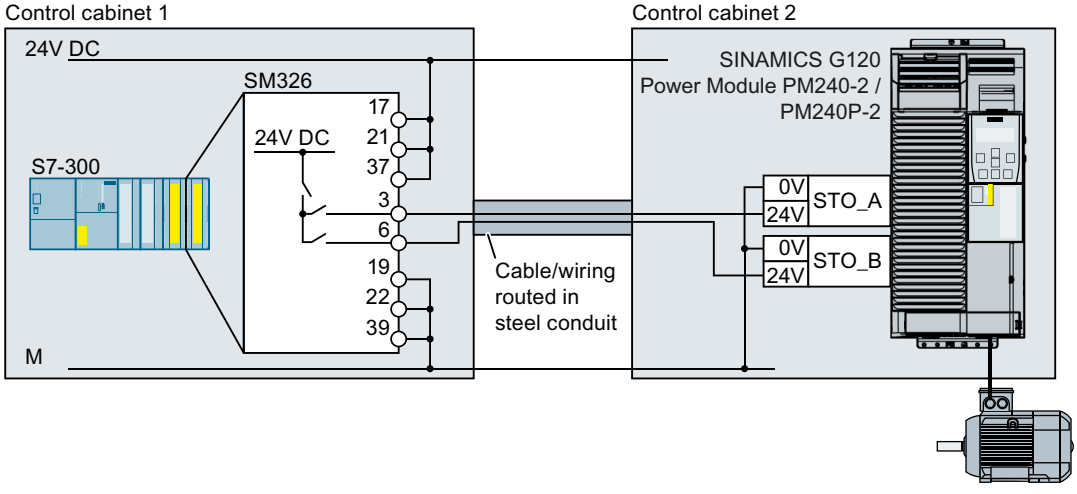


Figure 4-44 Connecting the PP switching module SM326

# 4.5 Evaluating via a fail-safe digital output

## 4.5.1 Overview

In the factory setting of the inverter, the fail-safe digital output is assigned to none of the integrated safety functions. Only when commissioning do you define whether you use, for example, the two digital outputs for standard functions, or you combine them to create a fail-safe digital output.

Table 4-17 inverters for cabinet-free installation (IP65)

| SINAMICS G120D with Control Unit | | Connector. Pin | Digital output | Fail-safe digital output | Read back input | |
|---|---|---|---|---|---|---|
| | CU240D-2 DP-F | X5.4 | DO 0 | F-DO 0 | X9.2 | DI 5 |
| | CU240D-2 PN-F | X5.2 | DO 1 | | | |
| | CU240D-2 PN-F PP | X5.3 | 2M | | | |
| | CU250D-2 DP-F | | | | | |
| | CU250D-2 PN-F | | | | | |
| | CU250D-2 PN-F PP | | | | | |

Table 4-18 Inverter for installation in a control cabinet (IP20)

| SINAMICS G120 with Control Unit | | Terminal strip | Digital output | Fail-safe digital output | Read back input | |
|---|---|---|---|---|---|---|
| | CU250S-2 | 18: NC | DO 0 | F-DO 0 | 67 | DI 6 |
| | CU250S-2 DP | 19: NO | | | | |
| | CU250S-2 PN | 20: COM | | | | |
| | CU250S-2 CAN | 23: NC | DO 2 | | | |
| | | 24: NO | | | | |
| | | 25: COM | | | | |
| Most applications require NO contacts for the fail-safe digital output.<br>If your application requires it, instead of NO contacts, you can also use the two NC contacts of the inverter. The safe state of the fail-safe digital output is always the quiescent state of the two relays. | | | | | | |

### What devices can be connected?

The fail-safe digital output is designed for the following devices:

- Direct connection of a fail-safe digital input.
- Connection of two relays.

The two signals of the fail-safe digital output each have the same state:

- High signal or NO contact closed: The fail-safe digital output is active.
- Low signal or NO contact open: The fail-safe digital output is not active.

## 4.5.2 Connecting the fail-safe digital output for a SINAMICS G120

### Connecting a relay

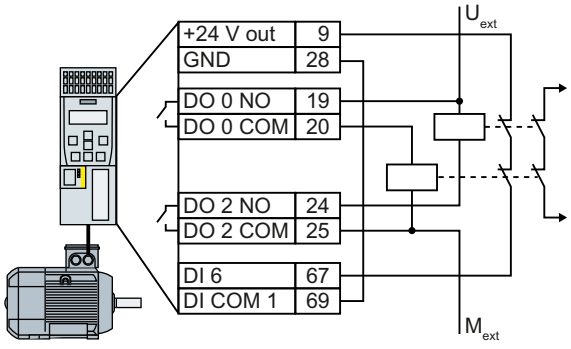


Figure 4-45 Connecting a relay at the F-DO

### Connecting an actuator with feedback signal

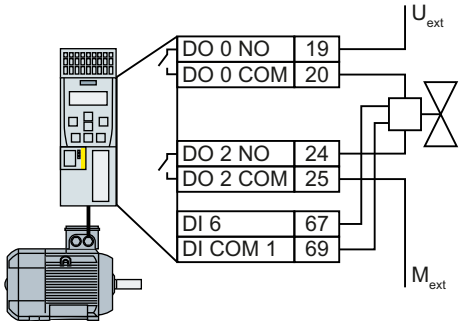


Figure 4-46 Connecting an F-DO to an actuator

## Connecting a passive actuator

At the F-DO, a passive actuator behaves just like an inductive or ohmic load.

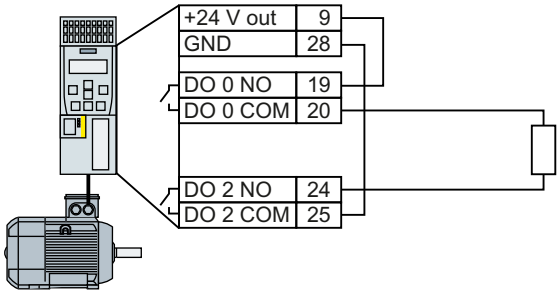


Figure 4-47 Connecting F-DO to a passive actuator

## Connecting with a fail-safe digital input

When DO 0 is switched-on and DO 2 is switched-off, fail-safe digital input F-DI must provide 24 V at connection DO 2.

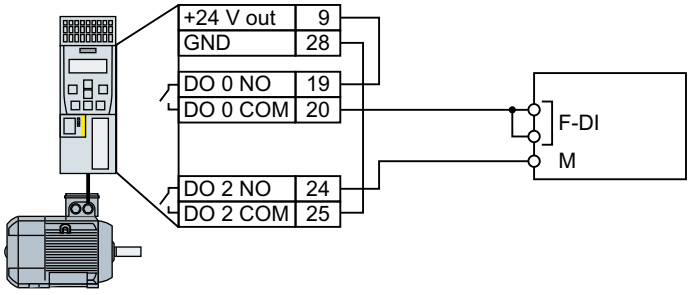


Figure 4-48 Connecting an F-DO with an F-DI

## 4.5.3 Connecting the fail-safe digital output for a SINAMICS G120D

### Connecting a relay

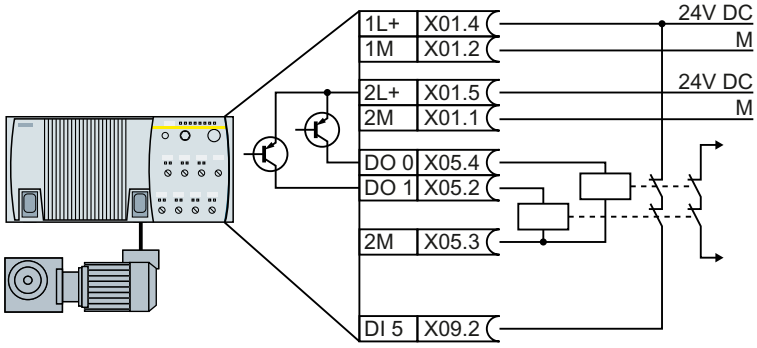


Figure 4-49 Connecting a relay at the F-DO

### Connecting an actuator with feedback signal

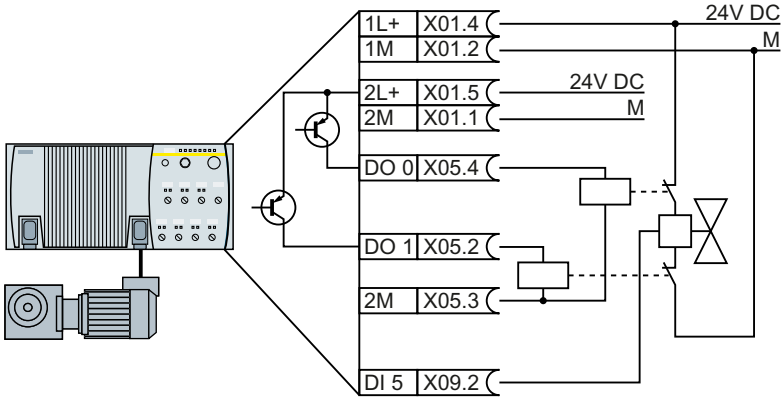


Figure 4-50 Connecting an F-DO to an actuator

### Connecting with a fail-safe digital input

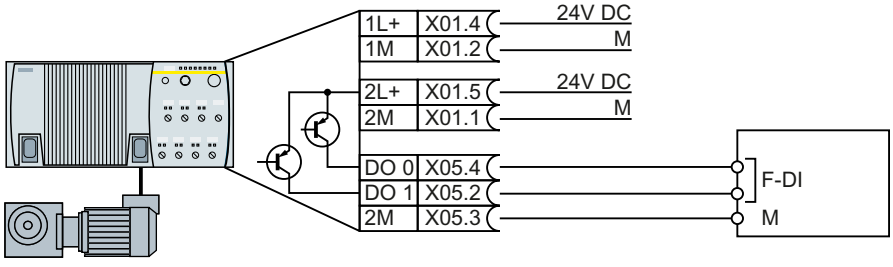


Figure 4-51 Connecting an F-DO with an F-DI

# 4.6 Connecting a motor holding brake via Safe Brake Relay

The Brake Relay must be connected to the protective conductor if the motor holding brake is supplied from a PELV circuit.

## Safe Brake Relay

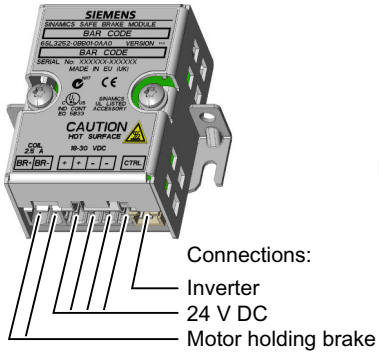


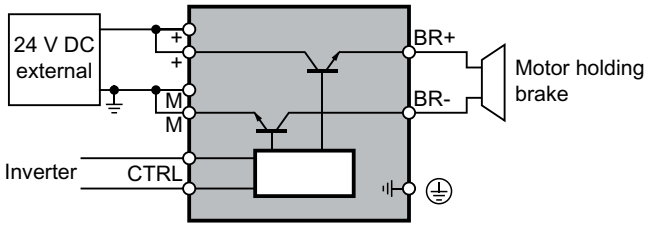


## 4.6.1 Connecting a Brake Relay at the PM240-2 and at the PM240P-2 Power Modules

### Connecting the Brake Relay to the inverter

The connector for the Brake Relay is located at the front of the Power Module. Lay the cable harness for the Brake Relay in the cable routing.

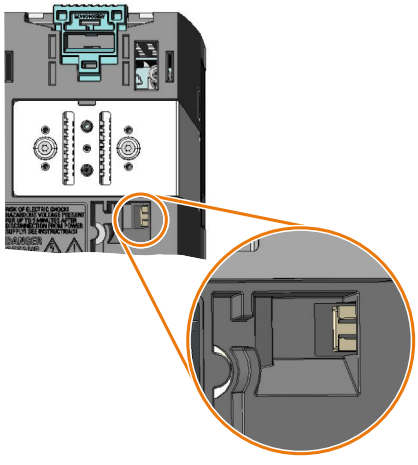

Brake relay connector for FSA ... FSC Power Modules without STO terminals

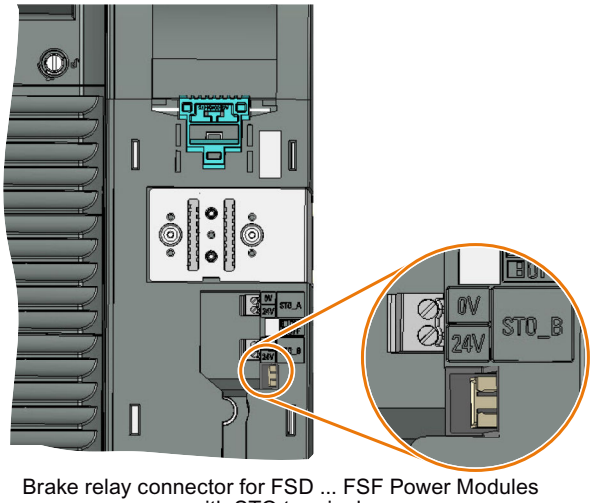


Brake relay connector for FSD ... FSF Power Modules with STO terminals

## 4.6.2 Connecting a Brake Relay at a PM250 Power Module

### Connecting the Brake Relay to the inverter

The connector for the brake relay is located at the front of the Power Module for the FSC frame size. These Power Modules have a cable entry for the connecting cable to the Brake Relay.

The connector for the Brake Relay is located at the bottom of the Power Module for the FSD … FSF frame sizes.

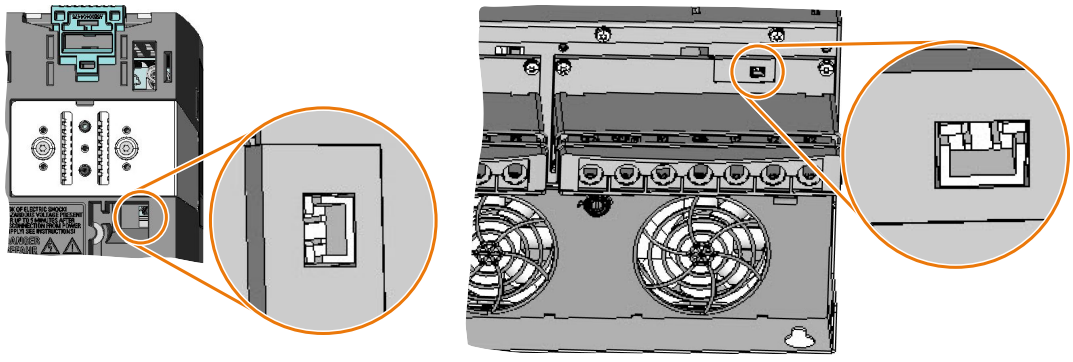

Power Module FSC  Power Module FSD ... FSF

Figure 4-52 Connector position for the Brake Relay

# Commissioning 5

## 5.1 About this chapter

### What can you find in this Chapter?

In this chapter, you will find answers to the following questions:

- Which sequence is recommended when commissioning the inverter?
- What tool do I need for commissioning?
- How do I restore the factory settings of the safety functions?
- In SINAMICS G120, is it permissible to jointly use the safety functions according to SIL 2 and SIL 3?
- How do I commission the safety functions?
- How do I configure communication via PROFIsafe in the inverter?
- How do I transfer the parameters of the safety functions to other inverters?
- Why is it necessary to "Accept safety functions"?
- What does accepting the safety functions involve?

## 5.2 Commissioning guidelines

The following overview shows the procedure when commissioning an inverter with integrated safety functions.

The steps for commissioning the safety functions form part of the activities for commissioning the entire drive.

### Procedure

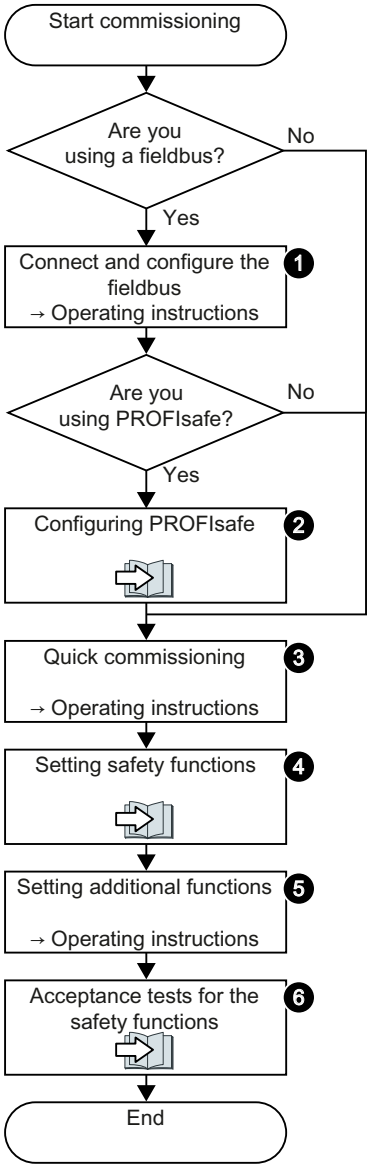


1. Connect the fieldbus to the inverter, and configure the communication in the higher-level control.
   → manual of your control system
   → operating instructions of your inverter
2. Configure the PROFIsafe communication in the higher-level control system.
   Configure PROFIsafe in the higher-level control system (Page 101).
3. Carry out the basic commissioning of the drive.
   → operating instructions of your inverter
4. Set the inverter safety functions.
   The following pages in the Function Manual
5. Commission all of the other inverter functions required, e.g. motor control or the protective functions.
   → operating instructions of your inverter
6. Perform an acceptance test for the safety functions.
   Acceptance tests for the safety functions (Page 171)

You have commissioned the inverter with integrated safety functions.
❐

## 5.3 Configure PROFIsafe in the higher-level control system

Information on how to configure PROFIsafe communication between a higher-level control system and inverter is provided in the Internet:

- Configuring a PROFIsafe telegram with Drive ES Basic (http://support.automation.siemens.com/WW/view/en/64326460)
- Controlling SINAMICS G120 via PROFIsafe, displaying inverter messages on an HMI (http://support.automation.siemens.com/WW/view/en/61450312)
- Configuring communication via Shared Device (http://support.automation.siemens.com/WW/view/de/50207311)

## 5.4 Commissioning tools

### PC tools

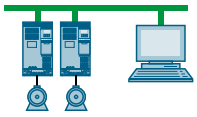

**STARTER** and **Startdrive** are PC tools that are used to commission, troubleshoot and control the inverter, as well as to back up and transfer the inverter settings. You can connect the PC with the inverter via USB or via the PROFIBUS / PROFINET fieldbus.

Connecting cable (3 m) between PC and inverter: Article number 6SL3255-0AA00-2CA0

STARTER DVD: Article number 6SL3072-0AA00-0AG0

Startdrive DVD: Article number 6SL3072-4CA02-1XG0

Startdrive, system requirements and download (https://support.industry.siemens.com/cs/ww/en/view/109752254)

STARTER, system requirements and download (http://support.automation.siemens.com/WW/view/en/26233208)

Startdrive tutorial (http://support.automation.siemens.com/WW/view/en/73598459)

STARTER videos (http://www.automation.siemens.com/mcms/mc-drives/en/low-voltage-inverter/sinamics-g120/videos/Pages/videos.aspx)

### Offline commissioning or online commissioning

With STARTER and Startdrive, you can work offline as well as online.

- Offline commissioning: without connection to the inverter
  Commissioning with Startdrive offline (Page 169)
- Online commissioning: with connection to the inverter
  Online commissioning using Startdrive is described in this manual.

## 5.5 Safety functions password

### What is the purpose of the password?

The password protects the settings of the safety function from being changed by unauthorized persons.

### Do you have to assign a password?

You do not have to assign a password.

The machine manufacturer decides whether or not a password is required.

The probabilities of failure (PFH) and certification of the safety functions also apply without password.

### What do I do if I lose the password?

#### Requirement

You have forgotten the password, however, you would nevertheless like to change the setting of the safety functions.

#### Procedure

1. Create a new project for the inverter using Startdrive.
   Leave all the factory setting in the project.
2. Load the project in the inverter.
   After loading, the inverter has the factory settings.
3. If a memory card inserted in the inverter, remove it.
4. Recommission the inverter.

You can obtain more information or learn about alternative procedures from Technical Support.

## 5.6 Resetting the safety functions to the factory setting

### Procedure

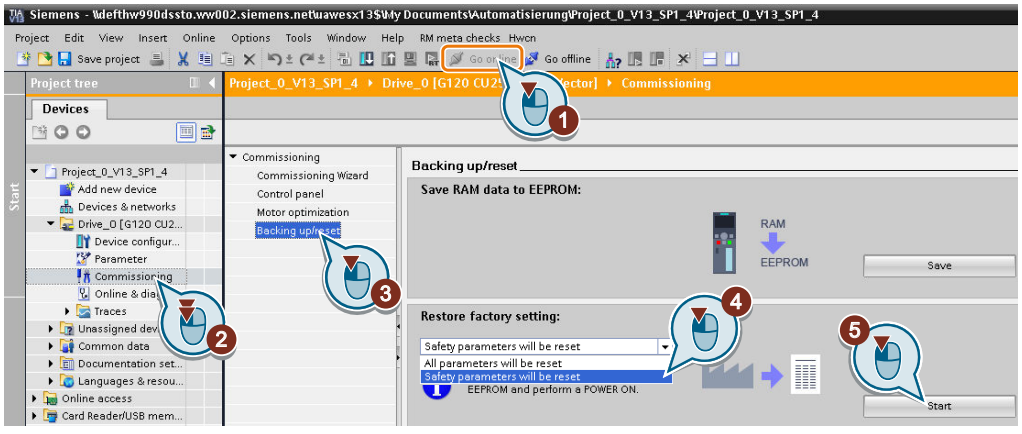


1. Go online.
2. Select "Commissioning".
3. Select "Backing up/reset".
4. Select "Safety parameters are reset".
5. Press the "Start" button.
6. Enter the password for the safety functions.
7. Confirm that the parameters have been saved (RAM to ROM).
8. Go offline.
9. Switch off the inverter power supply.
10. Wait until all LEDs on the inverter are dark.
11. Switch on the inverter power supply again.

You have restored the safety functions in the inverter to the factory settings.
❒

Exception: The password for the safety functions is not reset.

Resetting the password for the safety functions (Page 106)

| Parameter | Description | |
|---|---|---|
| p0010 | **Drive commissioning parameter filter** | |
| | 0 | Ready |
| | 30 | Parameter reset |
| p9761 | **SI password entry** (factory setting: 0000 hex)<br>Permissible passwords lie in the range 1 … FFFF FFFF. | |
| p9762 | **New SI password** | |
| p9763 | **Confirm SI password**<br>Confirm the new Safety Integrated password. | |

| Parameter | Description | |
|---|---|---|
| p0970 | **Reset drive parameters** | |
| | 5 | Starts a safety parameter reset.<br>After the reset, the inverter sets p0970 = 0. |

## 5.7 Resetting the password for the safety functions

### Requirement

You know the actual password for the safety functions.

### Procedure

1. Go online.
2. Open the screen form of the safety functions.
3. Press the "Start safety commissioning" button.

4. Enter the current password for the safety functions.
5. Set the new password = 0.

You have reset the password for the safety functions.
❐

| Parameter | Description |
|---|---|
| p0010 = 95 | **Drive commissioning parameter filter**<br>Safety Integrated commissioning |
| p9761 | **Enter a password** (factory setting: 0000 hex)<br>Permissible passwords lie in the range 1 … FFFF FFFF. |
| p9762 | **New password** |
| p9763 | **Confirm password** |
| p9701 = DC hex | **Confirm data change** (factory setting: 0)<br>Confirm the SI basic parameter change. |
| p0010 = 0 | **Drive commissioning parameter filter**<br>0: Ready |
| p0971 = 1 | **Save parameter**<br>1: Save the drive object (copy from RAM to ROM)<br>After the inverter has saved the parameters in a non-volatile fashion, then p0971 = 0. |

## 5.8 Selecting configuration of the safety functions

You define the following when configuring the safety functions:

- Which safety functions are available?
- Which interfaces are available for the safety functions?

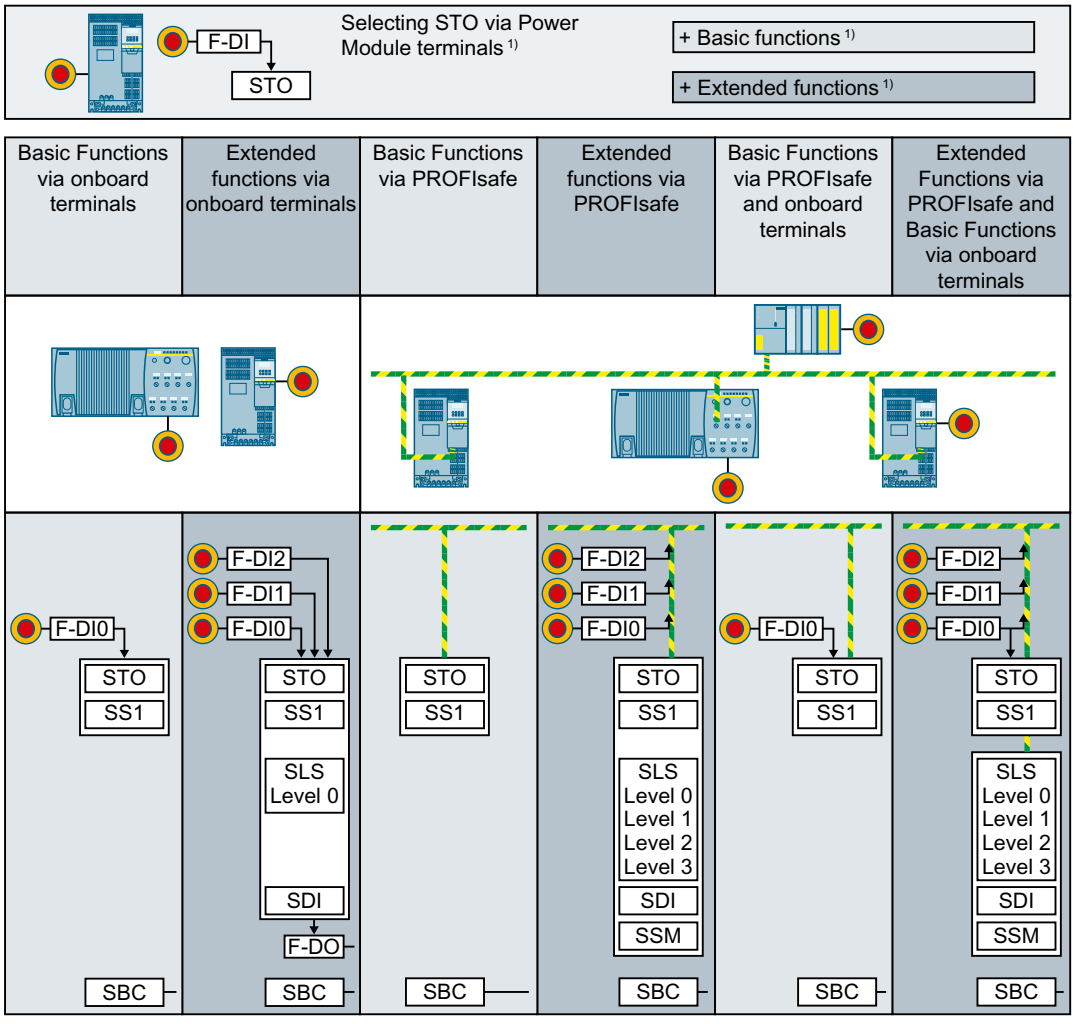


1) The "STO via Power Module terminals" function is only possible with the PM240-2 and PM240P-2, FSD … FSE Power Modules. There are three options when configuring the function:

- You use the "STO via Power Module terminals " function together with the Basic Functions.
- You use the "STO via Power Module terminals " function together with the Extended Functions.
- You use the "STO via Power Module terminals " function as the only safety function.

Figure 5-1 Overview of the possible configurations

| Selected configuration | Scope and interfaces of the safety functions |
|---|---|
| Selecting STO via Power Module terminals | Select STO via the Power Module terminals |
| Basic Functions via onboard terminals | • Select STO via the failsafe digital input.<br>Additionally, with CU250S-2:<br>• Select SS1 via the failsafe digital input.<br>• Control the motor holding brake via SBC. |
| Extended Functions via onboard terminals | • Select safety functions via the failsafe digital input.<br>• Only one monitoring limit of SLS can be used (SLS level 0).<br>In addition, for inverters with safety-related output:<br>• Evaluating the status of the safety functions via the failsafe digital output. |
| Basic Functions via PROFIsafe | • Select STO via PROFIsafe.<br>Additionally, with CU250S-2:<br>• Select SS1 via PROFIsafe.<br>• Control the motor holding brake via SBC. |
| Extended Functions via PROFIsafe | • Select safety functions via PROFIsafe.<br>• All four monitoring limits of SLS can be used (SLS levels 0 … 3)<br>• Evaluating the status of the failsafe digital inputs via PROFIsafe |
| Basic Functions via PROFIsafe and onboard terminals | • Select STO via failsafe digital input as well as also via PROFIsafe.<br>Additionally, with CU250S-2:<br>• Select SS1 via the failsafe digital input or PROFIsafe.<br>• Control the motor holding brake via SBC. |
| Extended Functions via PROFIsafe and Basic Functions via onboard terminals | • Select safety functions via PROFIsafe.<br>• Additionally select STO via the failsafe digital input.<br>• All four monitoring limits of SLS can be used (SLS levels 0 … 3)<br>• Evaluating the status of the failsafe digital inputs via PROFIsafe<br>Additionally, with CU250S-2:<br>• Select Basic Function SS1 via the failsafe digital input.<br>• Control the motor holding brake via SBC. |

# 5.9 Configuring the safety functions and PROFIsafe

## 5.9.1 Configuring safety functions

### Requirement

You are offline with Startdrive.

### Procedure

1. Select "Select safety functionality".

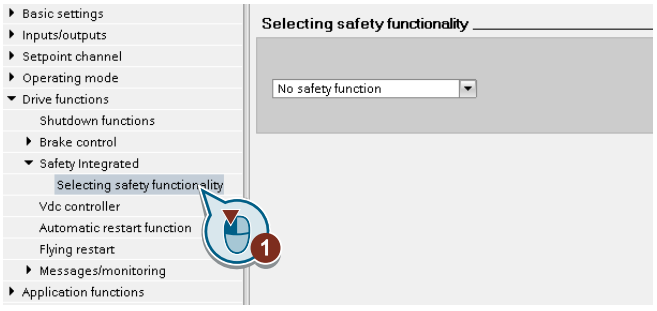


2. Define the configuration of the safety functions:

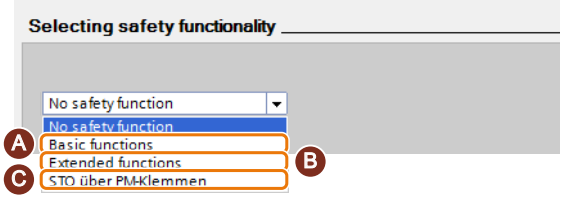


   – (A) You want to exclusively use the Basic inverter functions.
   – (B) You want to use the Extended safety functions.
   – (C) This option is only available with a PM240-2 or PM240P-2 FSD ... FSF Power Module. Select this option if you only use the "STO via Power Module terminals" function.

3. If you selected the Basic Functions or the Extended Functions, then you must define how the safety functions are controlled.

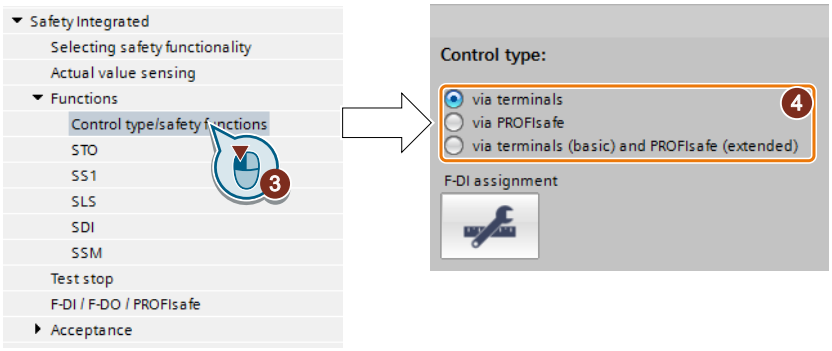


4. Define the interface for controlling the safety functions.

You have configured the safety functions.
❒

If you selected the onboard terminals as interface, you can now start to commission the safety functions.

For control via PROFIsafe, you must configure the PROFIsafe interface before you start to commission the safety functions.

| Parameter | Description | | | |
|---|---|---|---|---|
| p0010 = 95 | **Drive commissioning parameter filter**<br>Safety Integrated commissioning | | | |
| p9601 | **Enable functions integrated in the drive** (factory setting: 0000 bin) | | | |
| | | Functions that have been enabled: | | Functions that have been enabled: |
| | 0 hex | None | 80 hex | STO via Power Module terminals |
| | 1 hex | Basic functions via onboard terminals | 81 hex | • Basic functions via onboard terminals<br>• STO via Power Module terminals |
| | 4 hex | Extended functions via onboard terminals | 84 hex | • Extended functions via onboard terminals<br>• STO via Power Module terminals |
| | 8 hex | Basic functions via PROFIsafe | 88 hex | • Basic functions via PROFIsafe<br>• STO via Power Module terminals |
| | 9 hex | • Basic functions via PROFIsafe<br>• Basic functions via onboard terminal | 89 hex | • Basic functions via PROFIsafe<br>• Basic functions via onboard terminals<br>• STO via Power Module terminals |
| | C hex | Extended functions via PROFIsafe | 8C hex | • Extended functions via PROFIsafe<br>• STO via Power Module terminals |
| | D hex | • Extended functions via PROFIsafe<br>• Basic functions via onboard terminals | 8D hex | • Extended functions via PROFIsafe<br>• Basic functions via onboard terminals<br>• STO via Power Module terminals |
| p9761 | **Enter a password** (factory setting: 0000 hex)<br>Permissible passwords lie in the range 1 … FFFF FFFF. | | | |
| p9762 | **New password** | | | |
| p9763 | **Confirm password** | | | |

## 5.9.2 Configuring PROFIsafe

### Requirement

You are offline with Startdrive.

### Procedure

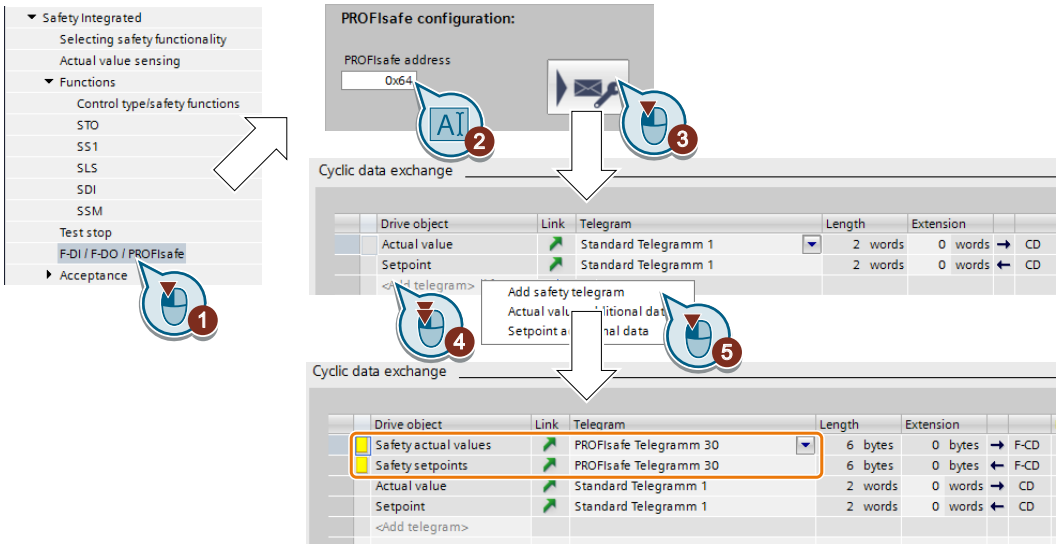


1. Select "F-DI / F-DO / PROFIsafe".
2. Enter the same address as hexadecimal value that you defined in the hardware configuration for the higher-level control system.
3. Press the "Telegram configuration" button.
   Startdrive opens the "Properties" of the cyclic data exchange.
4. Select "Add telegram".
5. Insert a "Safety telegram".

You have established communication between the inverter and higher-level control (F-CPU) via PROFIsafe telegram 30.
❒

| Parameter | Description |
|---|---|
| p9610 | **PROFIsafe address** (factory setting: 0000 hex) |

## Configuring telegram 900

### Procedure

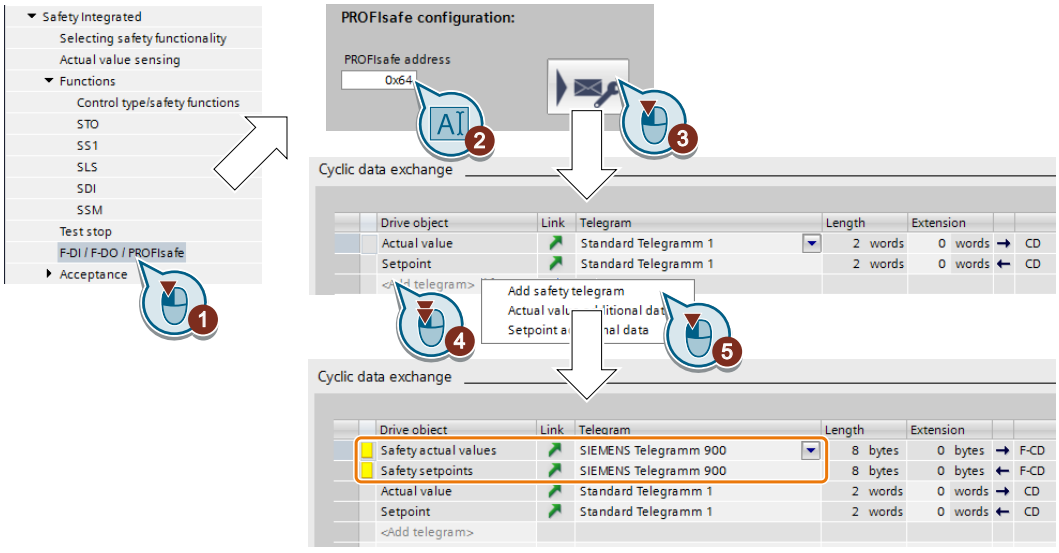


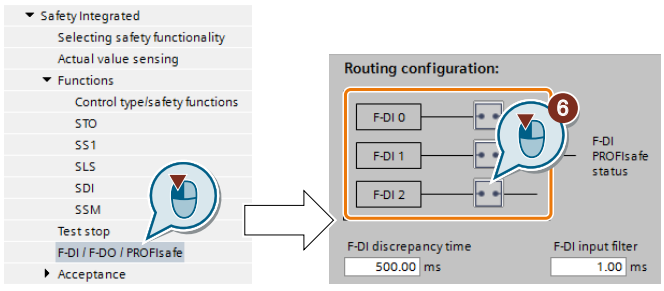


1. Select "F-DI / F-DO / PROFIsafe".
2. Press the "Telegram configuration" button.
   Startdrive opens the "Properties" of the cyclic data exchange.
3. Select "Add telegram".
4. Insert a "Safety telegram".
5. Set telegram 900.
6. Set which F-DI status of the inverter is transferred via PROFIsafe status word 5 .

**Note**

You can transfer the status of a failsafe digital input via PROFIsafe and simultaneously use the same input to control a safety function.

You have configured PROFIsafe telegram 900.
❒

Control word 5 and status word 5 (Page 54).

| Parameter | Description | |
|---|---|---|
| p9501.30 | **Enable F-DI in PROFIsafe telegram**(Factory setting: 0 bin)<br>0 signal: F-DI is inhibited in the PROFIsafe telegram<br>1 signal: F-DI is enabled in PROFIsafe telegram | |
| p10050 | **Transfer PROFIsafe F-DI** (Factory setting: 0000 bin) | |
| | Bit 0 | 0 signal: No transfer<br>1 signal: PROFIsafe status word 5 transfers the status of F-DI 0 |
| | Bit 1 | 0 signal: No transfer<br>1 signal: PROFIsafe status word 5 transfers the status of F-DI 1 |
| | Bit 2 | 0 signal: No transfer<br>1 signal: PROFIsafe status word 5 transfers the status of F-DI 2 |
| Settings for the discrepancy time and the signal filter of the fail-safe digital inputs:<br>Setting the filter for fail-safe digital inputs (Page 135) | | |

## 5.9.3 Activate settings

### Loading the settings into the drive

#### Procedure

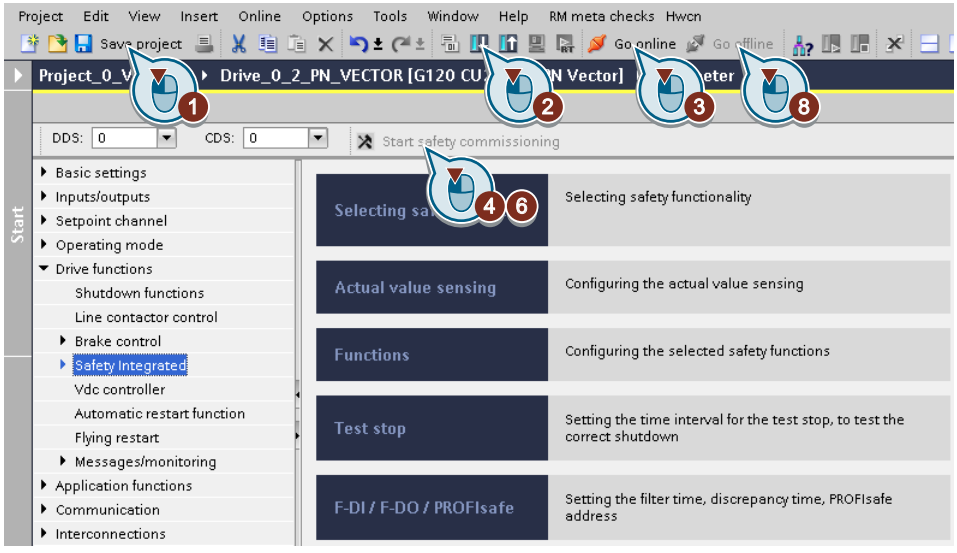


1. Save the project.
2. Select "Load to device".
3. Connect Startdrive online with the drive.
4. Press the "Start safety commissioning" button.
5. Enter the password for the safety functions.
   If the password is the factory default, you are prompted to change the password.
   If you try to set a password that is not permissible, the old password will not be changed.

6. Press the "End safety commissioning" button.
7. Confirm the prompt for saving your settings (copy RAM to ROM).
8. Disconnect the online connection.
9. Switch off the inverter power supply.
10. Wait until all LEDs on the inverter go dark (no voltage condition).
11. Switch the inverter power supply on again.

Your settings are now active.
❒

| Parameter | Description |
|---|---|
| p9700 = D0 hex | **SI copy function** (factory setting: 0)<br>Start the SI parameter copy function. |
| p9701 = DC hex | **Confirm data change** (factory setting: 0)<br>Confirm the SI basic parameter change. |
| p0010 = 0 | **Drive commissioning parameter filter**<br>0: Ready |
| p0971 = 1 | **Save parameter**<br>1: Save the drive object (copy from RAM to ROM)<br>After the inverter has saved the parameters in a non-volatile fashion, then p0971 = 0. |

# 5.10 Setting basic functions

## 5.10.1 Interconnecting the "STO active" signal

If you require the feedback signal "STO active" of the inverter in your higher-level control system, then you must appropriately interconnect the signal.

### Requirement

You are online with Startdrive.

### Procedure

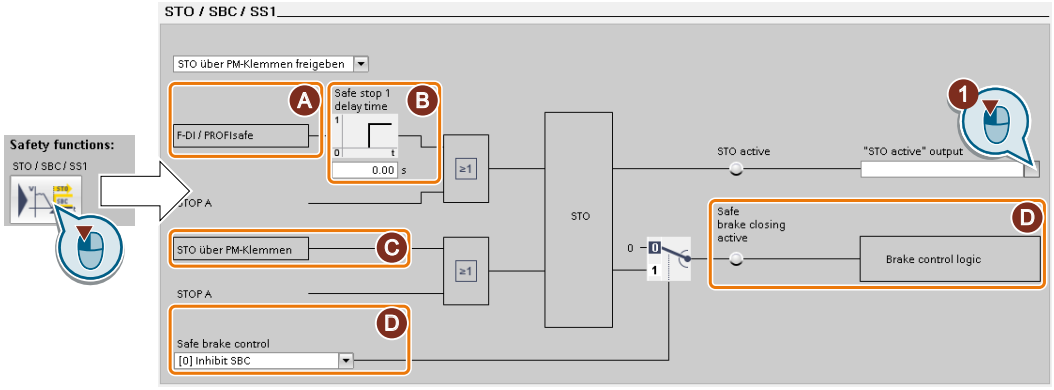


The screen form varies depending on the inverter and the interface that has been selected.

(A) Control type

(B) Delay time for SS1 and enable SBC for an inverter with CU250S-2 Control Unit

(C) STO via the Power Module terminals for a PM240-2 or PM240P-2, FSD … FSF Power Module

(D) Enable SBC for an inverter with CU250S-2 Control Unit

1. Select the button for the feedback signal.
2. Select the signal that matches your particular application.

You have interconnected the "STO active" checkback signal.
❒

After STO has been selected, the inverter signals "STO active" to the higher-level control.

| Parameter | Description |
|---|---|
| r9773.01 | **1 signal**: STO is active in the drive |

## 5.10.2 Setting the filter for fail-safe digital inputs

You must set the input filter and the simultaneity monitoring of the fail-safe digital input for all SINAMICS inverters, where the fail-safe digital input F-DI evaluates two redundant signals.

For SIMATIC ET 200pro FC-2, the input signal for STO is received from the F0 rail of the backplane bus of the ET200pro system. This is the reason that the SIMATIC ET 200pro FC-2 inverter has no simultaneity monitoring.

### Requirement

You are online with Startdrive.

### Procedure

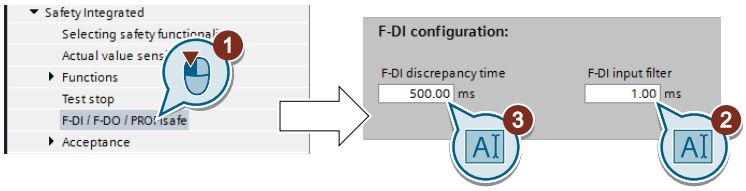


1. Navigate to the filter settings.
2. Set the debounce time for the F-DI input filter.
3. Set the discrepancy time for the simultaneity monitoring.

You have set the input filter and the simultaneity monitoring of the failsafe digital input.
❐

### Description of the signal filter

The following filters are available for the fail-safe digital inputs:

- One filter for the simultaneity monitoring
- A filter to suppress short signals, e.g. test pulses.

### Set the discrepancy time for the simultaneity monitoring.

The inverter checks that the two input signals of the fail-safe digital input always have the same signal state (high or low).

With electromechanical sensors (e.g. emergency stop buttons or door switches), the two sensor contacts never switch at exactly the same time and are therefore temporarily inconsistent (discrepancy). A permanent discrepancy signifies a fault in the fail-safe digital input circuit, e.g. wire breakage.

When appropriately set, the inverter tolerates brief discrepancies.

The discrepancy time does not extend the inverter response time. The inverter selects its safety function as soon as one of the two F-DI signals changes its state from high to low.

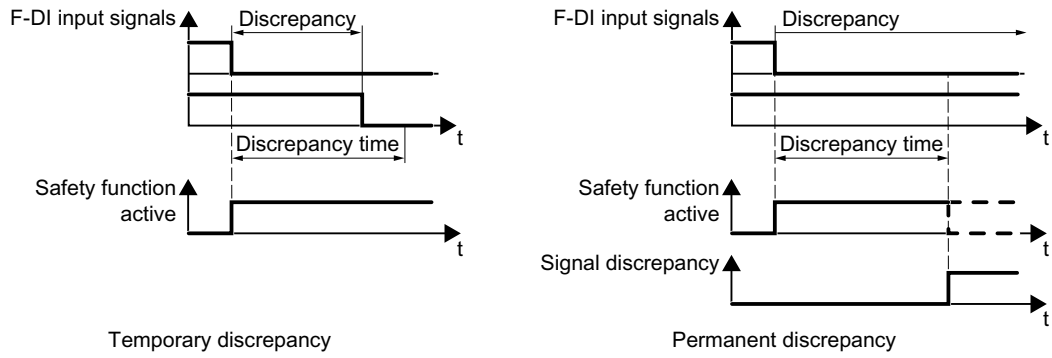


Figure 5-2 Simultaneity monitoring with discrepancy time

## Filter to suppress short signals

In the following cases, an immediate inverter response to signal changes of the fail-safe digital inputs is not desirable:

- If a fail-safe digital input of the inverter is interconnected with an electromechanical sensor, signal changes can occur due to contact bounce.
- In order to identify faults due to short-circuit or cross faults, several control modules test their fail-safe digital outputs with "bit pattern tests" (bright/dark test). If a fail-safe digital input of the inverter is interconnected with a fail-safe digital output of an open-loop control module, then the inverter responds with a bit pattern test.
  The typical duration of the signal change within a bit pattern test:
  - On test: 1 ms
  - Off test: 4 ms

If the fail-safe digital input responds to many signal changes within a certain time, then the inverter responds with a fault.

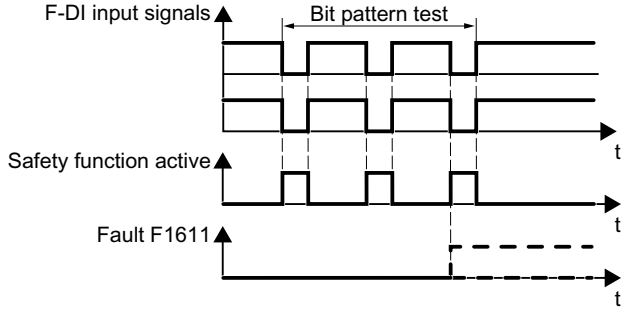


Figure 5-3 Inverter response to a bit pattern test

A filter in the inverter suppresses brief signals as a result of the bit pattern test or contact bounce.

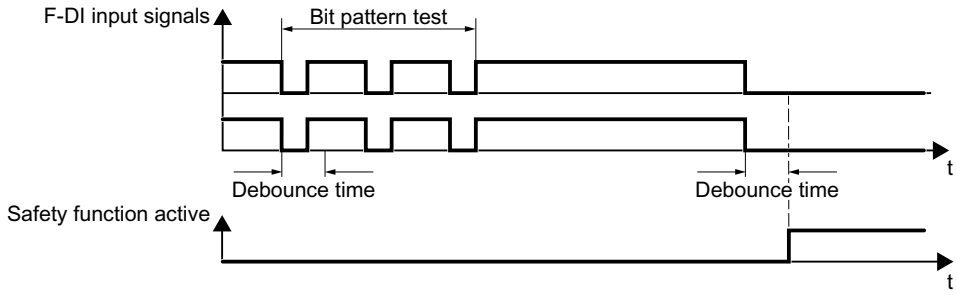


Figure 5-4 Filter to suppress brief signals

The filter extends the response time of the safety function by the debounce time.

| Parameter | Description |
|---|---|
| p9650 [1] | **F-DI switchover discrepancy time** (factory setting: 500 ms)<br>Tolerance time to change over the fail-safe digital input for the basic functions. |
| p9651 | **STO debounce time** (factory setting: 1 ms)<br>Debounce time of the fail-safe digital input for the basic functions. |

[1] For SIMATIC ET 200pro FC-2, the tolerance time is always 0 ms.

### Debounce times for standard and safety functions

The debounce time p0724 for "standard" digital inputs has no influence on the fail-safe digital input signals. Conversely, the same applies: The debounce time of the fail-safe digital inputs does not affect the signals of the "standard" inputs.

If you use an input as a standard input, set the debounce time using parameter p0724.

If you use an input as a fail-safe digital input, set the debounce time as described above.

### 5.10.3 Setting the forced checking procedure (test stop)

#### Requirement

You are online with Startdrive.

#### Procedure

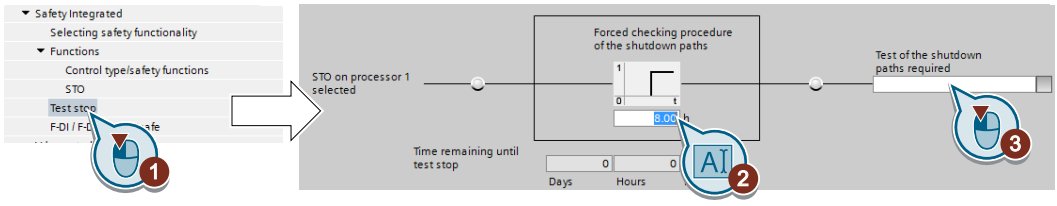


1. Select the screen form for setting the forced checking procedure.
2. Set the monitoring time to a value to match your application.
3. Using this signal, the inverter signals that a forced checking procedure (test stop) is required. Interconnect this signal with an inverter signal of your choice.

You have set the forced checking procedure (test stop) for the Basic Functions.
❐

## Description

The forced checking procedure (test stop) of the basic functions is an inverter self test. The inverter checks its circuits to switch off the torque. If you are using the Safe Brake Relay, for a forced checking procedure, the inverter also checks the circuits of this component.

You start the forced checking procedure each time that the STO function is selected.

Using a timer block, the inverter monitors as to whether the forced checking procedure is regularly performed.

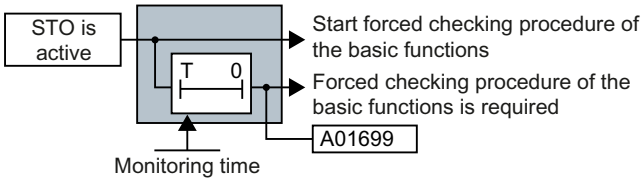


Figure 5-5 Starting and monitoring the forced checking procedure (test stop)

| Parameter | Description |
|---|---|
| p9659 | **Forced dormant error detection timer** (Factory setting: 8 h)<br>Monitoring time for the forced dormant error detection. |
| r9660 | **Forced dormant error detection remaining time**<br>Displays the remaining time until the forced dormant error detection and testing the safety switch-off signal paths. |
| r9773.31 | **1 signal: Forced dormant error detection is required**<br>Signals for the higher-level control system. |

## 5.10.4 Setting STO via Power Module terminals

### Requirement

You are online with Startdrive.

### Procedure

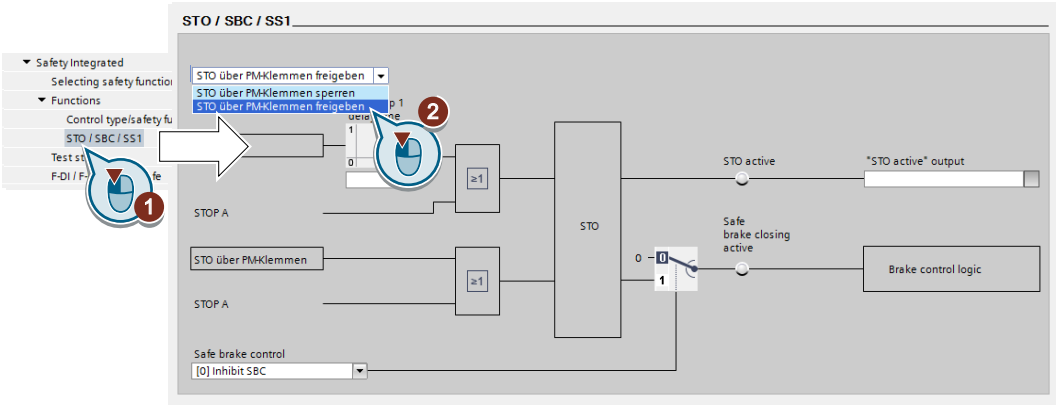


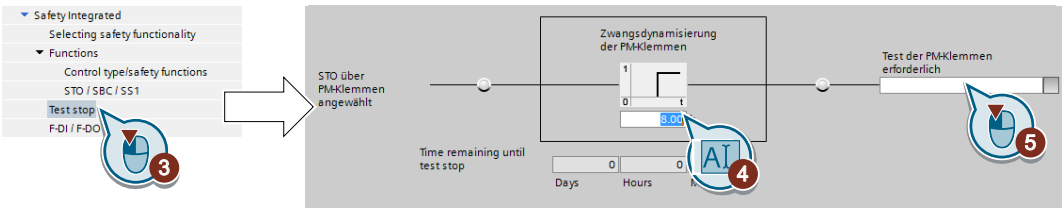


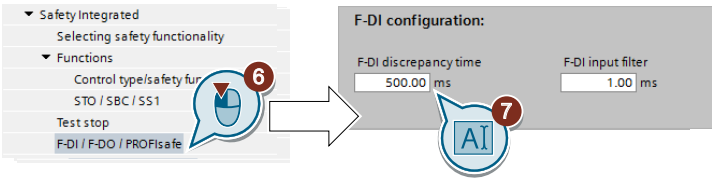


1. Select "STO / SBC / SS1".
2. Select "Enable STO via PM terminals".
3. Select "Test stop".
4. Set the monitoring time to a value to match your application.
5. Using this signal, the inverter signals that a forced checking procedure (test stop) is required for the "STO via Power Module terminals" function.
6. Select "F-DI / F-DO / PROFIsafe".
7. Set the discrepancy time (simultaneity monitoring) of the terminals on the Power Module. The setting not only applies for the terminals of the Power Module, but also for the failsafe digital input on the Control Unit for selecting STO.
   Setting the filter for fail-safe digital inputs (Page 116)
   The "F-DI input filter" has no significance for the terminals on the Power Module.

You have set the "STO via Power Module terminals" function.
❒

| Parameter | Description |
|---|---|
| p9601.7 | **Enable functions integrated in the drive** (factory setting: 0)<br>1 signal: STO via the Power Module terminals has been enabled |
| p9650 | **F-DI switchover discrepancy time** (Factory setting: 500 ms) |
| p9661 | **Forced checking procedure STO via PM terminals time** (Factory setting: 8 h) |
| r9662 | **Forced checking procedure STO via PM terminals remaining time** |
| r9773.30 | **SI status**<br>1 signal: The forced checking procedure (test stop) for the "STO via Power Module terminals" function is required. |

## 5.10.5 Setting the delay time for SS1

### Requirement

You are online with Startdrive.

### Procedure

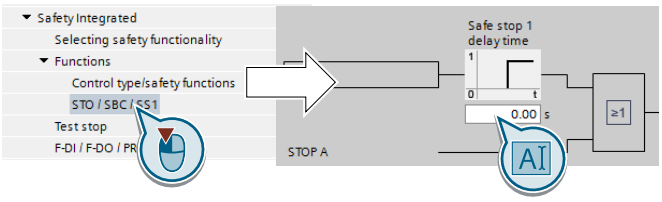


Set a delay time > OFF3 ramp down time.
❒

| Parameter | Description |
|---|---|
| p9652 | **Safe Stop 1 delay time**<br>Sets the delay time of the pulse suppression for the "Safe Stop 1" (SS1) function to brake with the OFF3 ramp-down time. |
| p1135 | **OFF3 ramp-down time** |

### Description: the SS1 function without monitoring the speed

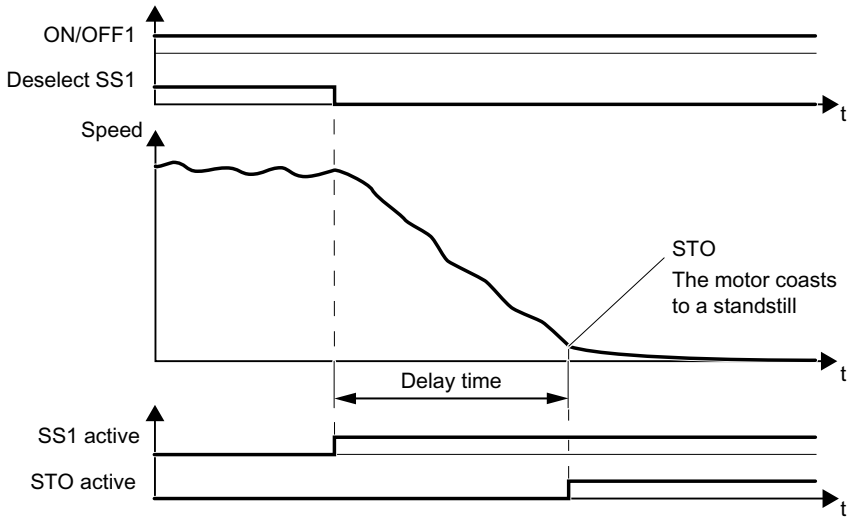


Figure 5-6 SS1 without monitoring the speed

When SS1 is selected, the inverter brakes the motor with the OFF3 ramp-down time.

After the delay time, independent of the actual speed, the inverter switches off the motor torque using the STO function.

## 5.10.6 Enabling SBC

### Requirement

You are online with Startdrive.

### Procedure

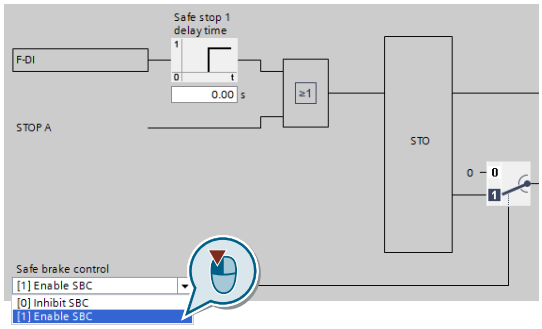


Set "[1] enable SBC".
❒

| Parameter | Description |
|---|---|
| p9602 | **Enable safe brake control**<br>0: SBC is locked<br>1: SBC is enabled |

## 5.10.7 Finalizing online commissioning

### Activate settings

#### Requirement

You are online with Startdrive.

#### Procedure

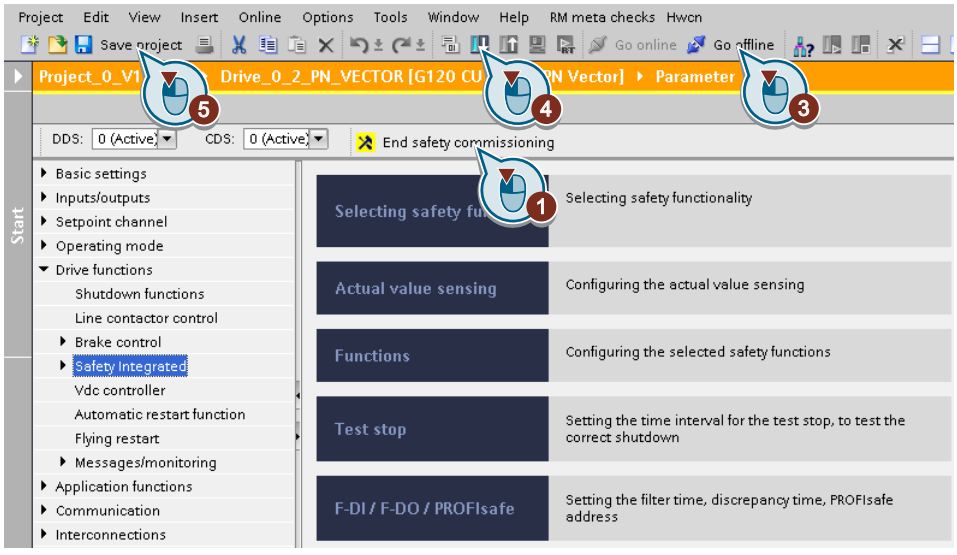


1. Press the "End safety commissioning" button.
2. Confirm the prompt for saving your settings (copy RAM to ROM).
3. Disconnect the online connection.
4. Select the "Load from device (software)" button.
5. Save the project.
6. Switch off the inverter power supply.
7. Wait until all LEDs on the inverter go dark (no voltage condition).
8. Switch the inverter power supply on again.

Your settings are now active.
❒

| Parameter | Description |
|---|---|
| p9700 = D0 hex | **SI copy function** (factory setting: 0)<br>Start the SI parameter copy function. |
| p9701 = DC hex | **Confirm data change** (factory setting: 0)<br>Confirm SI Basic parameter change |

| Parameter | Description |
|---|---|
| p0010 = 0 | **Drive commissioning parameter filter**<br>0: Ready |
| p0971 = 1 | **Save parameter**<br>1: Save the drive object (copy from RAM to ROM)<br>After the inverter has saved the parameters in a non-volatile fashion, then p0971 = 0. |

## Checking the interconnection of digital inputs

The simultaneous connection of digital inputs with a safety function and a "standard" function may lead to the drive behaving in unexpected ways.

If you control the safety functions in the inverter via failsafe digital inputs, then you must check as to whether the failsafe digital inputs are in some instances interconnected with a "standard" function.

### Procedure

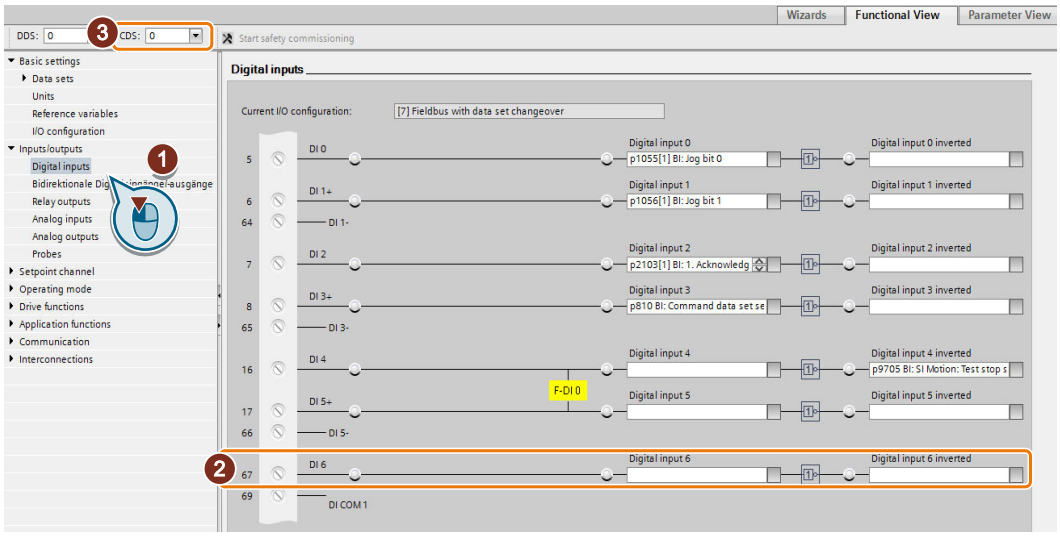


1. Select the screen for the digital inputs.
2. Remove all interconnections of the digital inputs that you use as failsafe digital input F-DI:
3. You must delete the digital input connections for all CDS if you use the switchover of the command data sets (CDS).
   You can find a description of the CDS switchover in the operating instructions.

You have ensured that the failsafe digital inputs only control the safety functions in the inverter. ❐

## Checking the interconnection of the feedback signal input for the failsafe digital output

The interconnection of the feedback signal input with a "standard" function may lead to the drive behaving in unexpected ways.

### Requirements

- You are using the failsafe digital output of the inverter.
- You use one of the test modes 2 or 3, where the inverter evaluates the status of the connected actuator via a digital input.

You must check whether this digital input is assigned a "Standard" function.

### Procedure

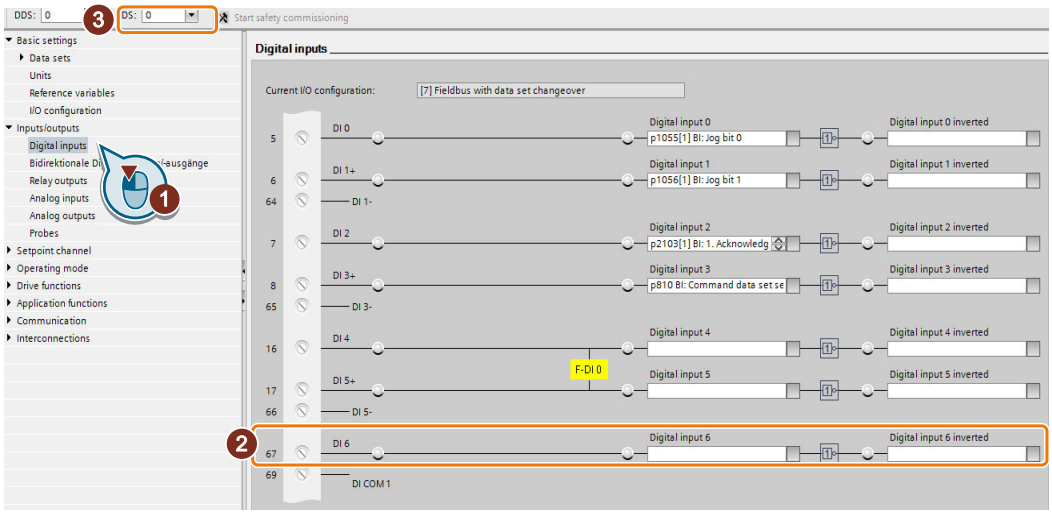


Figure 5-7 Removing the interconnection of the feedback signal input DI 6 for the CU250S-2

1. Select the digital inputs.
2. Remove the interconnection of the digital input that you use as feedback signal input for the failsafe digital output:
   - SINAMICS G120 with CU250S-2 Control Unit: Digital input DI 6 (see diagram).
   - SINAMICS G120D: Digital input DI 5.
3. If you are using several command data sets (CDS), then remove the interconnection of the feedback signal input for all CDS.

You have now prevented the feedback signal input of the failsafe digital output controlling "Standard" functions in the inverter.
❐

# 5.11 Setting extended functions

### Overview when setting the extended functions

To set all extended functions, proceed as follows:

1. Define the basic settings for all of the safety functions.
   Basic settings (Page 127).
2. If necessary, interconnect the fail-safe inputs and outputs.
   – Setting fail-safe digital inputs (Page 133)
   – Setting a fail-safe digital output (Page 140)
3. Adapt the safety functions that you are using to suit your application.
   – Setting SS1 (Page 146)
   – Setting SLS (Page 152)
   – Setting SSM (Page 156)
   – Setting SDI (Page 159)
4. Complete commissioning.
   Final steps when commissioning online (Page 163)

## 5.11.1 Basic settings

### 5.11.1.1 Enabling the safety functions

For most of the safety functions in the inverter, you can only enable them together.

If you are not using one of the safety functions that has been enabled, then you must permanently set the signal to select this function to a 1-signal:

- When controlling via PROFIsafe:
  In the higher-level control, set the corresponding bit in control word 1 to a 1 signal.
  PROFIsafe telegrams (Page 51).
- When controlling via failsafe digital inputs:
  In the inverter, set the corresponding signal to "Statically deselected".
  Interconnecting a safety function with fail-safe digital input (Page 133)

#### Requirement

You are online with Startdrive.

### Procedure

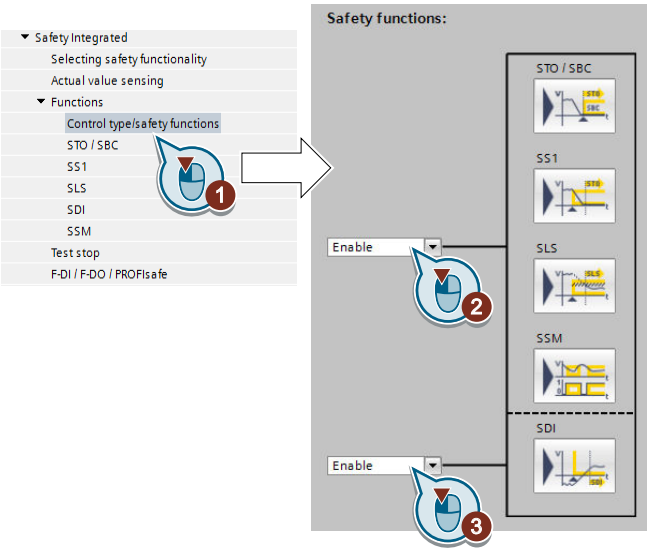


1. Select "Control type/safety functions".
2. Enable safety functions STO … SSM.
   You must always set these safety functions, even if you only use the SDI function.
3. If you are using the SDI function, then enable SDI.

You have enabled the safety functions in the inverter.
❒

| Parameter | Description | |
|---|---|---|
| p9501 | **Enable safety functions** | |
| | .00 | 1 signal: Enable the Extended Functions (without SDI) |
| | .17 | 1 signal: Enable SDI |

### 5.11.1.2 Setting the forced checking procedure (test stop)

#### Requirement

You are online with Startdrive.

#### Procedure

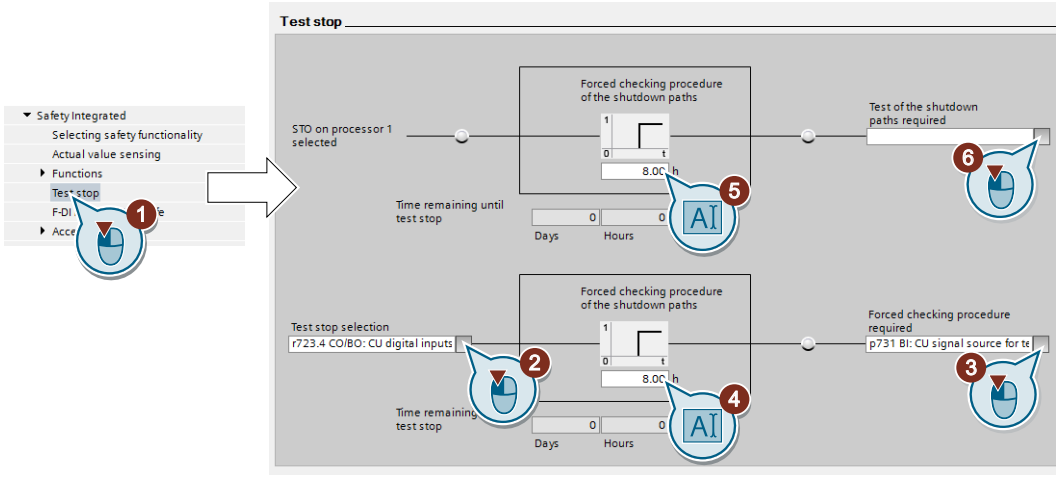


1. Select "Test stop":
2. This signal starts the forced checking procedure (test stop) and resets the remaining time of the monitoring to the value ④. Interconnect this signal, for example, with a digital input or a bit in the fieldbus control word.
3. For this signal, you must carry out a forced checking procedure (test stop) as quickly as possible. Interconnect this signal, for example with a digital output of your choice or a status bit in the fieldbus.
4. Time until the next test stop.
5. Set the monitoring time to the maximum value (9000 hours). This means that the forced checking procedure monitoring for the Basic Functions is deactivated.
   This monitoring is not required when using the Extended Functions, as the forced checking procedure for the Extended Functions also includes the forced checking procedure for the Basic Functions.
6. Setting not required.

You have set the forced checking procedure (test stop) of the Extended Functions.
❐

## Description

The forced dormant error detection (test stop) of the extended functions is an inverter self test. The inverter checks its circuits to monitor the speed and to switch off the torque.

Using a timer block, the inverter monitors as to whether the forced dormant error detection is regularly performed.

You must start the forced dormant error detection with a signal of your choice.

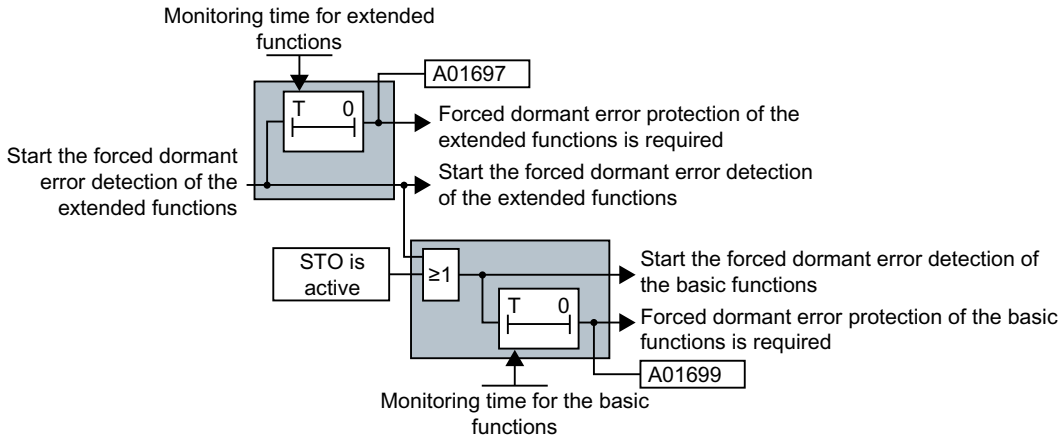


Figure 5-8 Starting and monitoring the forced dormant error detection (test stop)

| Parameter | Description |
|---|---|
| p9559 | **Forced dormant error detection timer** (Factory setting: 8 h)<br>Monitoring time for the forced dormant error detection of the extended functions. |
| p9659 | **Forced dormant error detection timer** (Factory setting: 8 h)<br>Monitoring time for the forced dormant error detection of the basic functions. |
| r9660 | **Forced dormant error detection remaining time**<br>Displays the remaining time up to performing the forced dormant error detection of the basic functions. |
| p9705 | **Forced dormant error detection signal source** (Factory setting: 0)<br>Signal source for the forced dormant error detection of the basic functions and the extended functions. |
| r9723.0 | **1 signal: Forced dormant error detection of the extended functions is necessary**<br>Signal for the higher-level control. |
| r9765 | **Forced dormant error detection remaining time**<br>Displays the remaining time up to performing the forced dormant error detection of the extended functions. |
| r9773.31 | **1 signal: Forced dormant error detection of the basic functions is required** |

### 5.11.1.3 Setting encoderless actual value sensing

#### Requirement

You are online with Startdrive.

#### Procedure

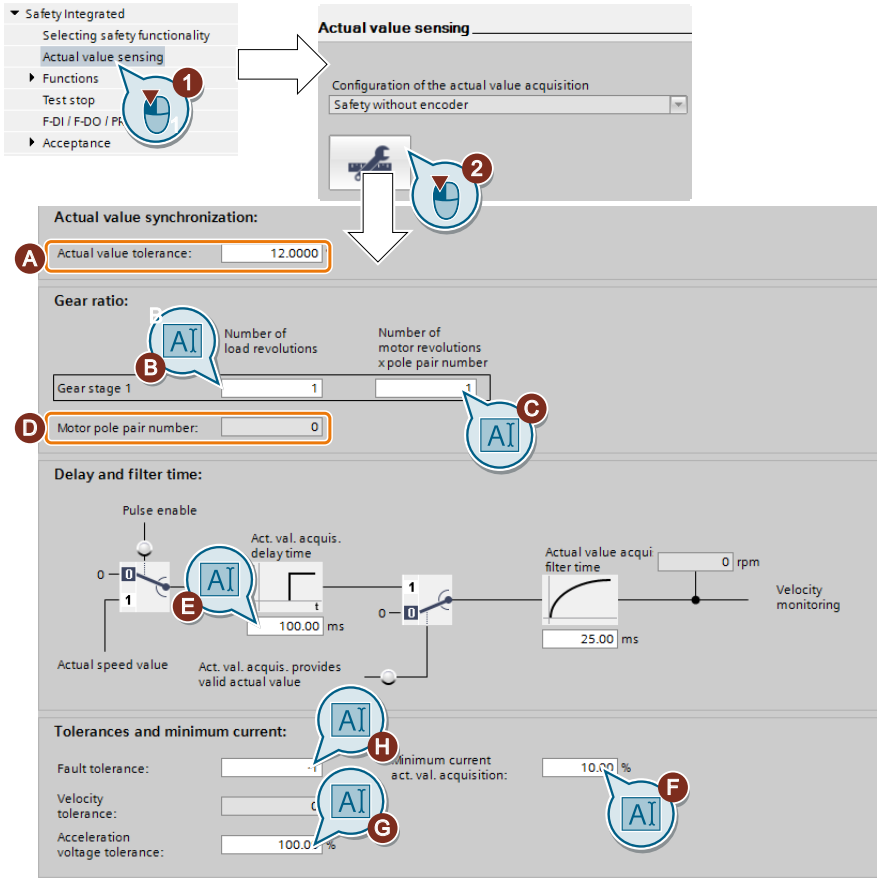

1. Press the "Actual value sensing" button.
2. Select the "Configuration actual value sensing" button.
   Set the following:
   - **(A) Actual value tolerance**:
     In most cases you do not have to change this value. If, in operation, the inverter issues message C01711 or C30711 (fault value 3 or 44 … 57), increase this value step-by-step until the message to longer occurs.
     **Note:** If you increase this value, the speed monitoring of the inverter becomes less sensitive to limit violations.
   - **(B), (C), (D) Gearbox ratio**:
     Read the number of pole pairs (D) of the motor, and set the data of your machine according to the following table.

| | Number of load revolutions | Number of motor revolutions |
|---|---|---|
| Without gear | Value (B) = 1 | Value (C) = number of pole pairs (D) |
| Gearbox with speed ratio load/motor = L/M | Value (B) = L | Value (C) = M x number of pole pairs (D) |

   - **Example**: The drive has a gearbox with a load/motor speed ratio = 23/50
     ⇒ Value (B) = 23, value (C) = 50 × number of pole pairs (D)
   - **(E) Delay time actual value sensing**:
     In most cases you do not have to change this value. If you switch on the motor with the safety functions active (SLS, SDI or SSM) and the inverter responds when switching on with a safety fault, increase this value in the range 50 % … 100 % of the motor excitation build-up time (p0346).
   - **(F) Minimum current actual value sensing**:
     In most cases you do not have to change the setting. When the motor draws a low current, and the inverter responds with a fault, then reduce this value in steps of 1 % until the fault no longer occurs.
   - **(G) Voltage tolerance acceleration:**
     In most cases you do not have to change this parameter. During acceleration with very short ramp-up and ramp-down times, if the inverter responds with a safety function fault, increase this value step-by-step by approx. 10%.
   - **(H) Fault tolerance**:
     In most cases you do not have to change this parameter. This parameter can suppress sporadic faults of the safety functions. The parameter defines how often the inverter tolerates its internal plausibility monitoring per second.
3. Close the screen form.

You have set encoderless actual value sensing.
❒

| Parameter | Description |
|---|---|
| p9521 | **Number of load revolutions** (Factory setting: 1)<br>Denominator for the gearbox ratio between the motor and load. |
| p9522 | **Number of motor revolutions** (Factory setting: 2000 rpm)<br>Numerator for the gearbox ratio between the motor and load. |

| Parameter | Description |
|---|---|
| p9542 | **Actual value tolerance** (Factory setting: 12 °)<br>Tolerance for the crosswise comparison of the actual position between processor 1 and 2. |
| p9585 | **Fault tolerance** (Factory setting: -1)<br>Tolerance of the plausibility monitoring of current and voltage angle. |
| p9586 | **Delay time actual value sensing** (Factory setting: 100 ms)<br>Delay time for evaluating the encoderless actual value sensing after the motor has been switched on. |
| p9588 | **Minimum current actual value sensing** (Factory setting: 10 %)<br>Minimum current for encoderless actual value sensing (1 % ≙ 10 mA). |
| p9589 | **Voltage tolerance acceleration** (factory setting: 100 %)<br>Acceleration limit to filter discontinuity in the velocity. |

## 5.11.2 Setting fail-safe digital inputs

### 5.11.2.1 Interconnecting a safety function with fail-safe digital input

#### Requirements

- You are online with Startdrive.
- You have selected the Extended Functions via onboard terminals.

#### Procedure

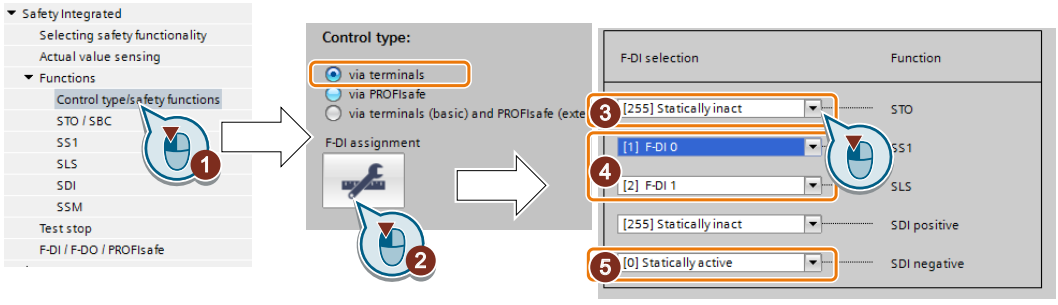


1. Select "Control type/safety functions".
2. Press the "F-DI assignment" button.
3. If you do not use a safety function, set the associated "Select F-DI" = "[255] statically deselected".
4. Interconnect the failsafe digital inputs with the corresponding safety functions.
5. If a safety function should always be active, set the associated "Select F-DI" = "[0] statically active".
6. Close the screen form.

You have assigned specific safety functions to the failsafe digital inputs.
❒

| Parameter | Description | |
|---|---|---|
| p10022 | **STO input terminal** (Factory setting: 0) | 0: Statically selected<br>1: F-DI 0<br>2: F-DI 1<br>3: F-DI 2<br>255: Statically deselected |
| p10023 | **SS1 input terminal** (Factory setting: 0) | |
| p10026 | **SLS input terminal** (Factory setting: 0) | |
| p10030 | **SDI positive input terminal** (Factory setting: 0) | |
| p10031 | **SDI negative input terminal** (Factory setting: 0) | |

### 5.11.2.2 Setting the filter for fail-safe digital inputs

#### Requirements

- You are online with Startdrive.
- You have selected one of the two following settings:
  - Extended Functions via onboard terminals
  - Extended Functions via PROFIsafe and onboard terminals

#### Procedure

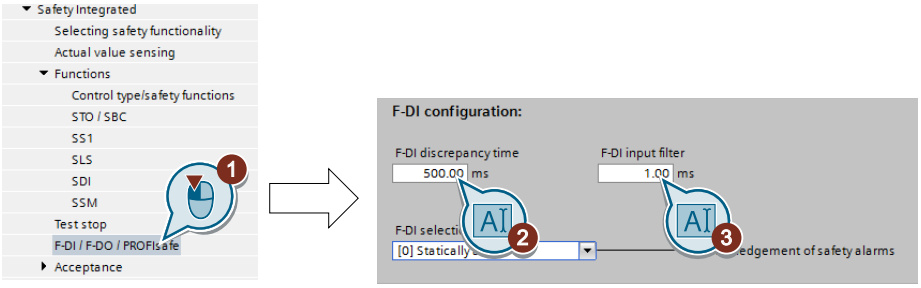


1. Select "F-DI / F-DO / PROFIsafe".
2. The discrepancy time (simultaneity monitoring) tolerates signal changes at the failsafe digital input that do not occur simultaneously.
3. The input filter suppresses brief signal changes.

You have set the filter for the failsafe digital inputs.
❒

## Description of the signal filter

The following filters are available for the fail-safe digital inputs:

- One filter for the simultaneity monitoring
- A filter to suppress short signals, e.g. test pulses.

## Set the discrepancy time for the simultaneity monitoring.

The inverter checks that the two input signals of the fail-safe digital input always have the same signal state (high or low).

With electromechanical sensors (e.g. emergency stop buttons or door switches), the two sensor contacts never switch at exactly the same time and are therefore temporarily inconsistent (discrepancy). A permanent discrepancy signifies a fault in the fail-safe digital input circuit, e.g. wire breakage.

When appropriately set, the inverter tolerates brief discrepancies.

The discrepancy time does not extend the inverter response time. The inverter selects its safety function as soon as one of the two F-DI signals changes its state from high to low.

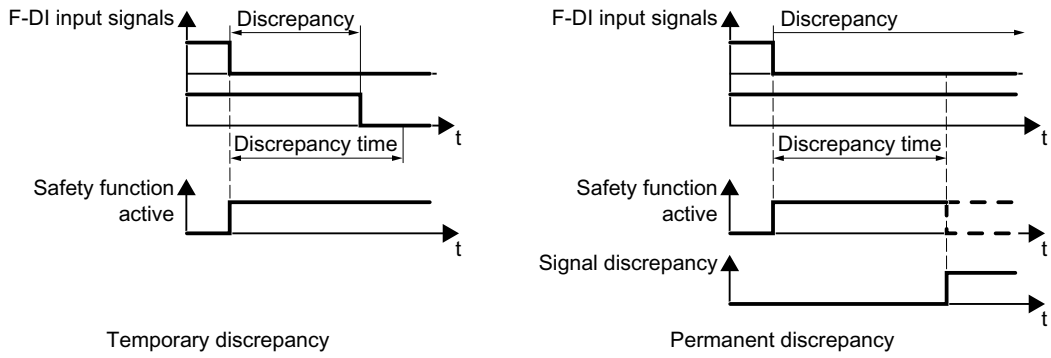


Figure 5-9 Simultaneity monitoring with discrepancy time

## Filter to suppress short signals

In the following cases, an immediate inverter response to signal changes of the fail-safe digital inputs is not desirable:

- If a fail-safe digital input of the inverter is interconnected with an electromechanical sensor, signal changes can occur due to contact bounce.
- In order to identify faults due to short-circuit or cross faults, several control modules test their fail-safe digital outputs with "bit pattern tests" (bright/dark test). If a fail-safe digital input of the inverter is interconnected with a fail-safe digital output of an open-loop control module, then the inverter responds with a bit pattern test.
  The typical duration of the signal change within a bit pattern test:
  - On test: 1 ms
  - Off test: 4 ms

If the fail-safe digital input responds to many signal changes within a certain time, then the inverter responds with a fault.

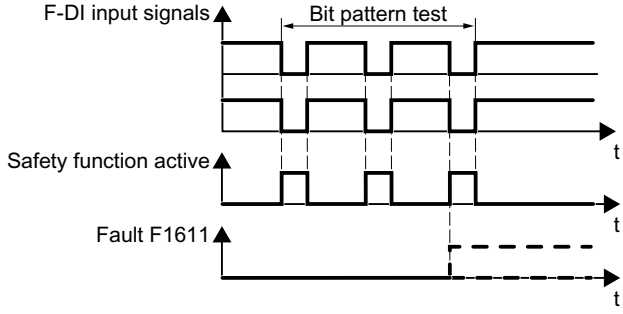


Figure 5-10 Inverter response to a bit pattern test

A filter in the inverter suppresses brief signals as a result of the bit pattern test or contact bounce.

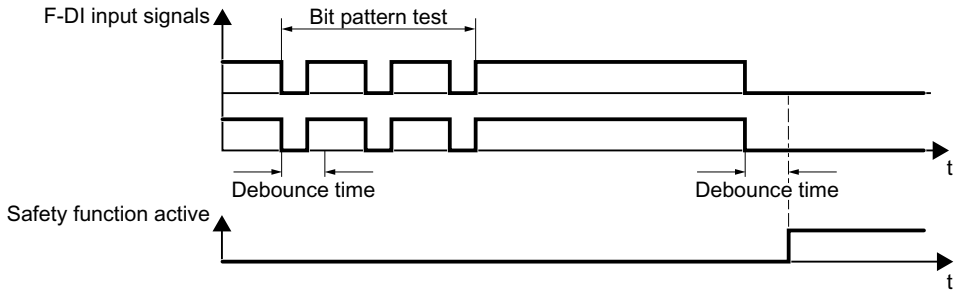


Figure 5-11 Filter to suppress brief signals

The filter extends the response time of the safety function by the debounce time.

| Parameter | Description |
|---|---|
| p9650 | **F-DI switchover discrepancy time** (Factory setting: 500 ms)<br>Tolerance time to change over the fail-safe digital input for the basic functions. |
| p9651 | **STO debounce time** (factory setting: 1 ms)<br>Debounce time of the fail-safe digital input for the basic functions. |
| p10002 | **F-DI switchover discrepancy time** (Factory setting: 500 ms)<br>Tolerance time to change over the fail-safe digital inputs for the extended functions. |
| p10017 | **Digital inputs debounce time** (factory setting: 1 ms)<br>Debounce time of the fail-safe digital inputs for the extended functions. |

### Debounce times for standard and safety functions

The debounce time p0724 for "standard" digital inputs has no influence on the fail-safe digital input F-DI signals. Conversely, the same applies: The debounce time of the fail-safe digital inputs does not affect the signals of the "standard" inputs.

If you use an input as a standard input, set the debounce time using parameter p0724 .

If you use an input as a fail-safe digital input, set the debounce time as described above.

### 5.11.2.3 Interconnecting the signal for fail-safe acknowledgment

#### Requirements

- You are online with Startdrive.
- You have selected the Extended Functions via onboard terminals.

#### Procedure

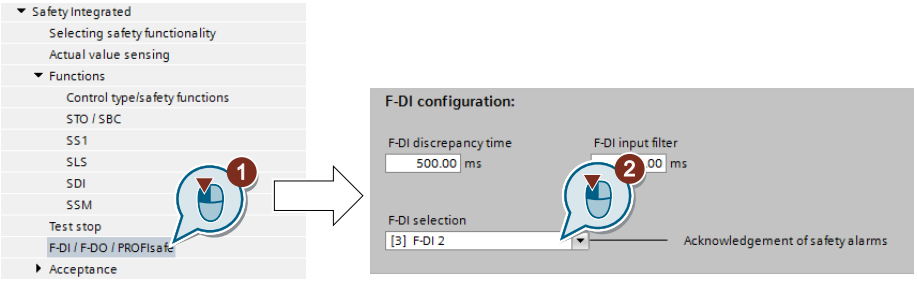


1. Select "F-DI / F-DO / PROFIsafe".
2. Select a free failsafe digital input for the failsafe acknowledgment signal.
   If there are no free failsafe digital inputs available, you have to acknowledge the safety function faults using a different method.
   Acknowledging using a fail-safe signal (Page 260)

You have interconnected the failsafe acknowledge signal with a failsafe digital input.
❐

## 5.11.3 Setting STO via Power Module terminals

### Requirement

You are online with Startdrive.

### Procedure

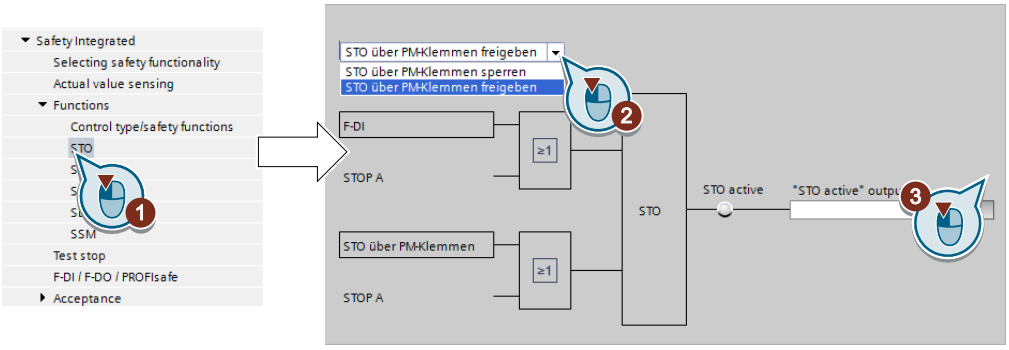


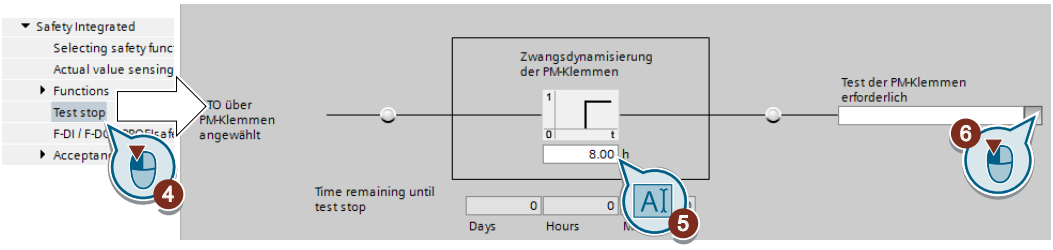


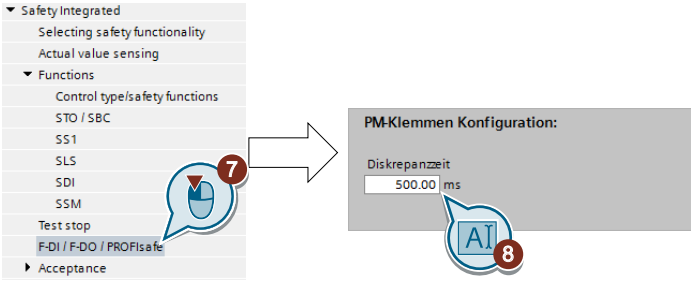


1. Select "STO".
2. Select "Enable STO via PM terminals".
3. If required in the higher-level control, interconnect the feedback signal "STO active".
4. Select "Test stop".
5. Set the monitoring time to a value to match your application.
6. Using this signal, the inverter signals that a forced checking procedure (test stop) is required for the "STO via Power Module terminals" function.

7. Select "F-DI / F-DO / PROFIsafe".
8. Set the discrepancy time (simultaneity monitoring) of the terminals on the Power Module. The setting not only applies for the Power Module terminals, but also for selecting the STO Basic Function via F-DI.
   Setting the filter for fail-safe digital inputs (Page 135).

You have set the "STO via Power Module terminals" function.
❐

| Parameter | Description | |
|---|---|---|
| p9601.7 | **Enable functions integrated in the drive** (factory setting: 0)<br>1 signal: STO via the Power Module terminals has been enabled | |
| p9650 | **F-DI switchover discrepancy time** (Factory setting: 500 ms) | |
| p9661 | **Forced checking procedure STO via PM terminals time** (Factory setting: 8 h) | |
| r9662 | **Forced checking procedure STO via PM terminals remaining time** | |
| r9773 | **SI status** | |
| | .1 | 1 signal: STO is active in the drive |
| | .30 | 1 signal: The forced checking procedure (test stop) for the "STO via Power Module terminals" function is required. |

## 5.11.4 Setting a fail-safe digital output

### 5.11.4.1 Setting the forced dormant error detection (test stop)

#### Requirements

- You are online with Startdrive.
- You have selected the Extended Functions via onboard terminals.

#### Procedure

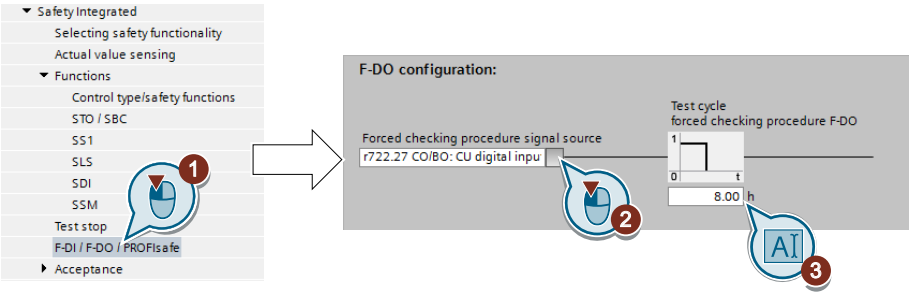

1. Select "F-DI / F-DO / PROFIsafe".
2. Interconnect this signal, for example with a digital input or a control bit in the fieldbus. This signal starts the forced checking procedure (test stop) of the failsafe digital output - and resets the remaining time of the monitoring to the value ③.
   We recommend that the failsafe digital output is tested together with the forced checking procedure of the safety functions. To do this, interconnect the signal source with the same signal as the forced checking procedure of the safety functions.
   Setting the forced checking procedure (test stop) (Page 129)
3. Set the monitoring time for the forced checking procedure.
   The time must be longer than or equal to the time for monitoring the forced checking procedure of the Extended Functions.
   Setting the forced checking procedure (test stop) (Page 129)

You have defined which signal the inverter uses to start the forced checking procedure (test stop) of its failsafe digital output.
❒

## Description: Forced checking procedure of the fail-safe output

The forced checking procedure of the fail-safe digital output is the regular self-test of the inverter, where the inverter checks whether the output can be shut down (deactivated).

The inverter monitors the regular forced checking procedure of the fail-safe digital output using a time block.

You must start the forced checking procedure with a signal of your choice.

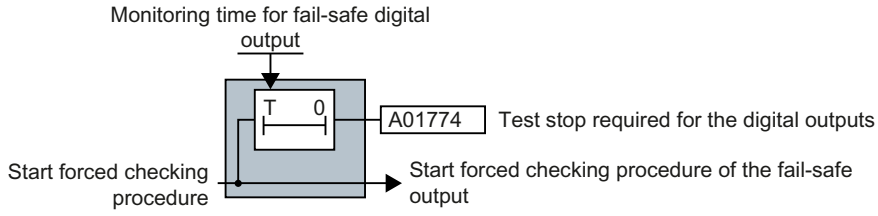


Figure 5-12 Start and monitoring of the forced checking procedure of the fail-safe digital output

| Parameter | Description |
|---|---|
| p10003 | **Forced checking procedure timer** (Factory setting: 8 h)<br>Setting the time to perform the forced checking procedure. |
| p10007 | **Forced checking procedure F-DO signal source** (Factory setting: 0)<br>Select an input terminal to start the forced checking procedure. |

### 5.11.4.2 Output signal and setting the test mode

#### Requirements

- You are online with Startdrive.
- You have selected the Extended Functions via onboard terminals.

#### Procedure

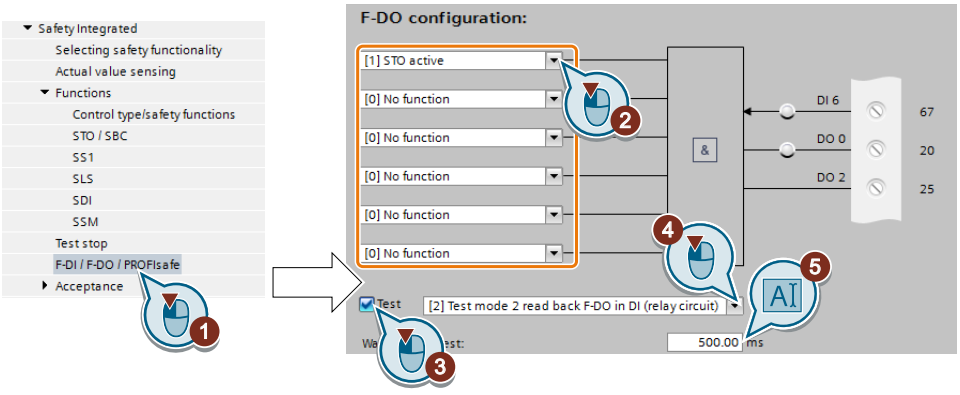


1. Select "F-DI / F-DO / PROFIsafe".
2. Interconnect the status signals of your choice with the failsafe digital output. The "Safestate"signal is described below.
   The inverter logically combines the status signals according to the following rules:
   – The inverter ignored inputs without interconnection.
   – If none of the inputs is interconnected, then the output signal = 0.
3. Activate the test for the failsafe digital output.
4. Select the test mode that is compatible with your application.
5. Adjust the wait time. The following lower limits apply for the setting:
   – The wait time must be longer than the response time $t_R$ of the connected actuator.
   – The wait time must be longer than or equal to 24 ms.
   – The wait time must be longer than the time for the input filter of the feedback input (p10017).
     Setting the filter for fail-safe digital inputs (Page 135)

You have defined which signal the inverter transfers via its failsafe digital output, and how the inverter tests its failsafe digital output.
❐

## Signal "Safestate"

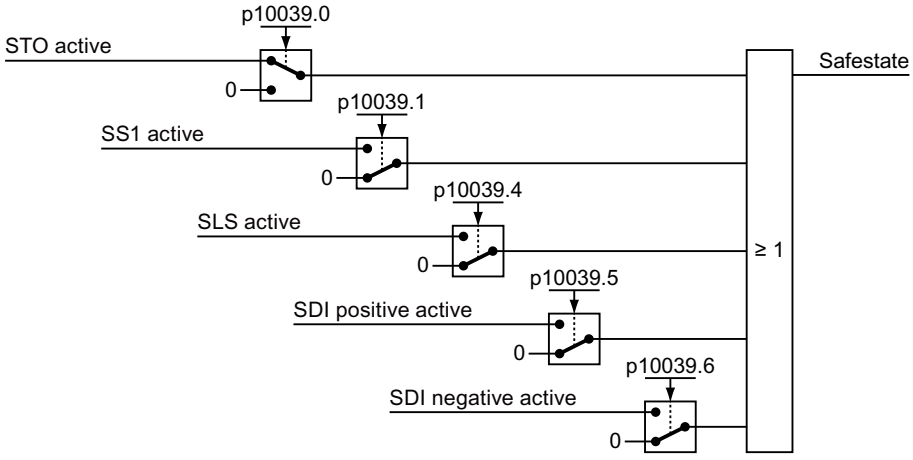


Figure 5-13 The Safetstate signal in the factory setting

You must set parameter p10039 via the parameter view in Startdrive in order to adapt the "Safestate" signal.

## The test mode of the fail-safe output

Using its adjustable test mode, the inverter checks as to whether the fail-safe digital output can be shut down.

The test mode is aligned according to the interconnection of the fail-safe digital output. For test modes 2 and 3, you must adapt the appropriate wait time to your particular application.

Connecting the fail-safe digital output for a SINAMICS G120D (Page 96)

Connecting the fail-safe digital output for a SINAMICS G120 (Page 94)

### Test mode 1

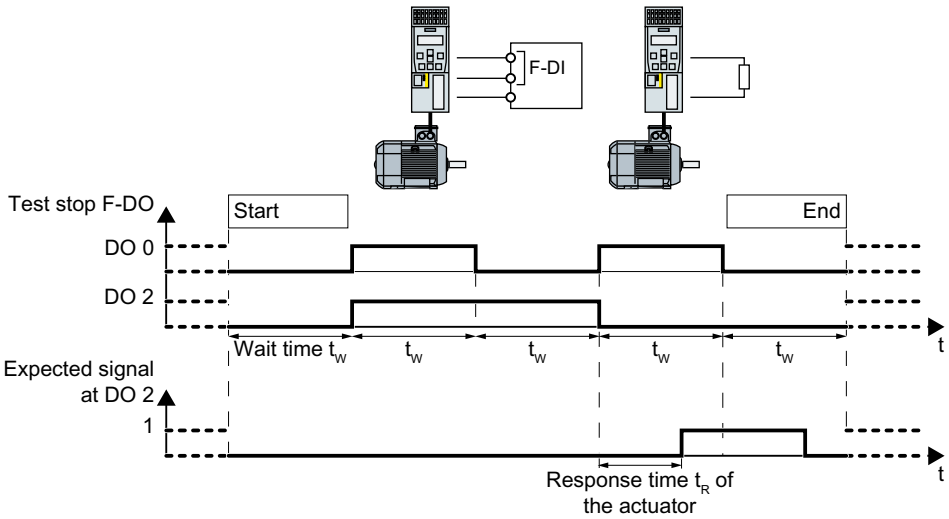


Figure 5-14 Expected response at digital output DO 2 for test mode 1

When testing the fail-safe digital output, the inverter switches the two digital outputs on and off alternating - and evaluates the voltage signal at output DO 2.

### Test mode 2

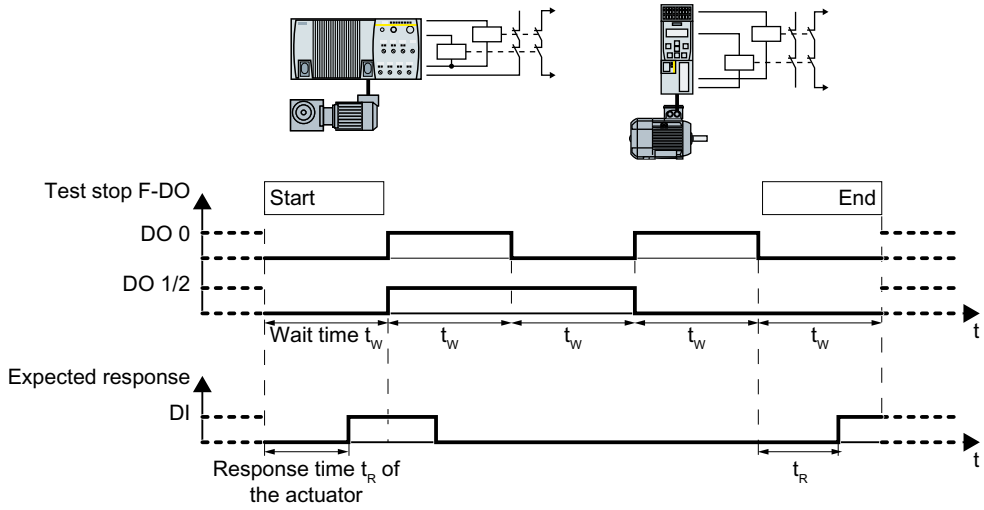


Figure 5-15 Expected response at the digital input for test mode 2

When testing the fail-safe digital output, the inverter switches the two digital outputs on and off alternating, and evaluates the feedback via a digital input.

### Test mode 3

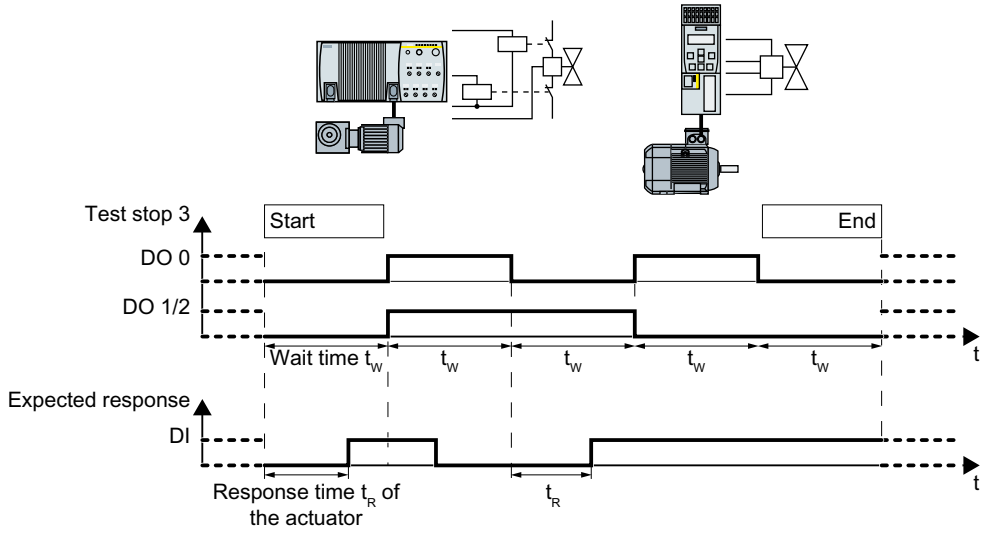


Figure 5-16 Expected response at the digital input for test mode 3

When testing the fail-safe digital output, the inverter switches the two digital outputs on and off alternating, and evaluates the feedback via a digital input.

### Test mode 4

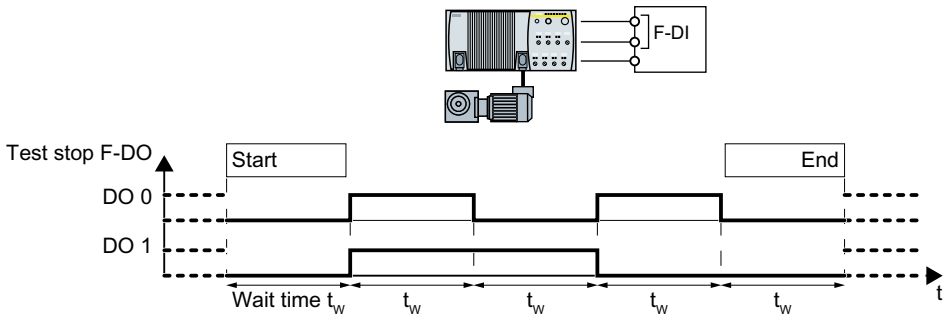


Figure 5-17 Test mode 4

When testing the fail-safe digital output, the inverter switches the two digital outputs on and off alternating.

SINAMIC G120D inverters monitor their transistor outputs using internal signals.

For SINAMICS G120, the connected fail-safe digital input F-DI must monitor its input signals for discrepancy.

| Parameter | Description |
|---|---|
| p10039 | **Safe State signal selection** (factory setting: 0000 0001 bin)<br>Setting the signals for the "Safe State" signal. |
| p10042[0…5] | **F-DO signal sources** (Factory setting: 0)<br>Setting the 6 signal sources for F-DO. |
| p10046 | **F-DO feedback signal input activation** (Factory setting: 0000 bin)<br>Activation of the feedback input for the fail-safe digital output. |
| p10047 | **F-DO test mode** (Factory setting: 0100 bin)<br>Setting the test mode for the safety-related digital output |
| p10001 | **Wait time for the forced checking procedure at DO** (Factory setting: 500 ms) Within this time, for a forced checking procedure of the fail-safe digital output, the signal must have been detected via the corresponding feedback input (p10047).<br>The inverter always waits for a minimum of 24 ms. |

## 5.11.5 Setting SS1

### Monitoring modes

You can select between two different monitoring modes of the SS1 function.

| Braking ramp monitoring | Acceleration monitoring |
|---|---|
| 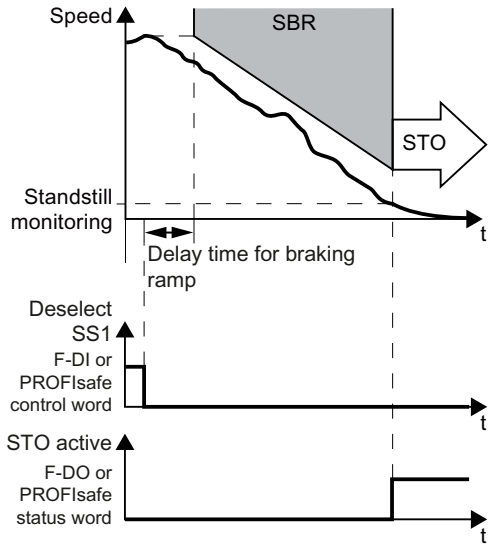 | 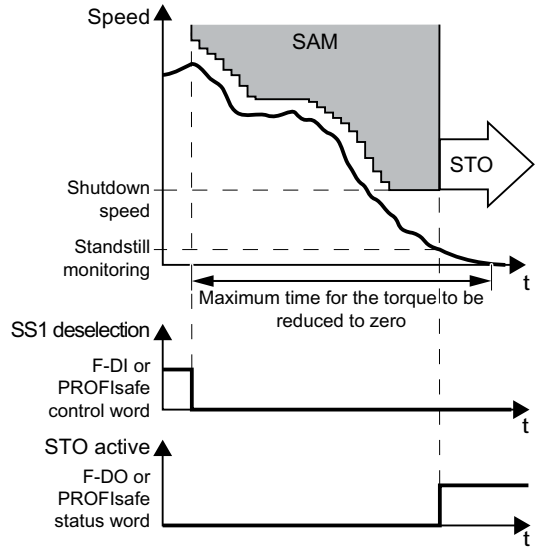 |
| • Using the SBR (Safe Brake Ramp) function, the inverter monitors whether the motor speed decreases.<br>• The gradient of the SBR function can be adjusted. The SBR function only starts after the "Delay time for braking ramp". The SBR function starts with the speed setpoint that was applicable when SS1 was selected.<br>• When the standstill monitoring threshold is fallen below, the inverter safely switches off the motor torque (STO). | • The inverter monitors the motor speed using the SAM (Safe Acceleration Monitor) function.<br>• The inverter prevents the motor from re-accelerating by continuously adjusting the monitoring threshold to the decreasing speed.<br>• The inverter reduces the monitoring threshold until the "Shutdown speed" has been reached.<br>• The inverter safely switches off the motor torque (STO) if one of the following conditions is fulfilled:<br>– The inverter detects that the motor is stationary.<br>– The maximum time until the torque is switched off has expired. |

### 5.11.5.1 Setting SS1 with braking ramp monitoring

#### Requirement

You are online with Startdrive.

#### Procedure

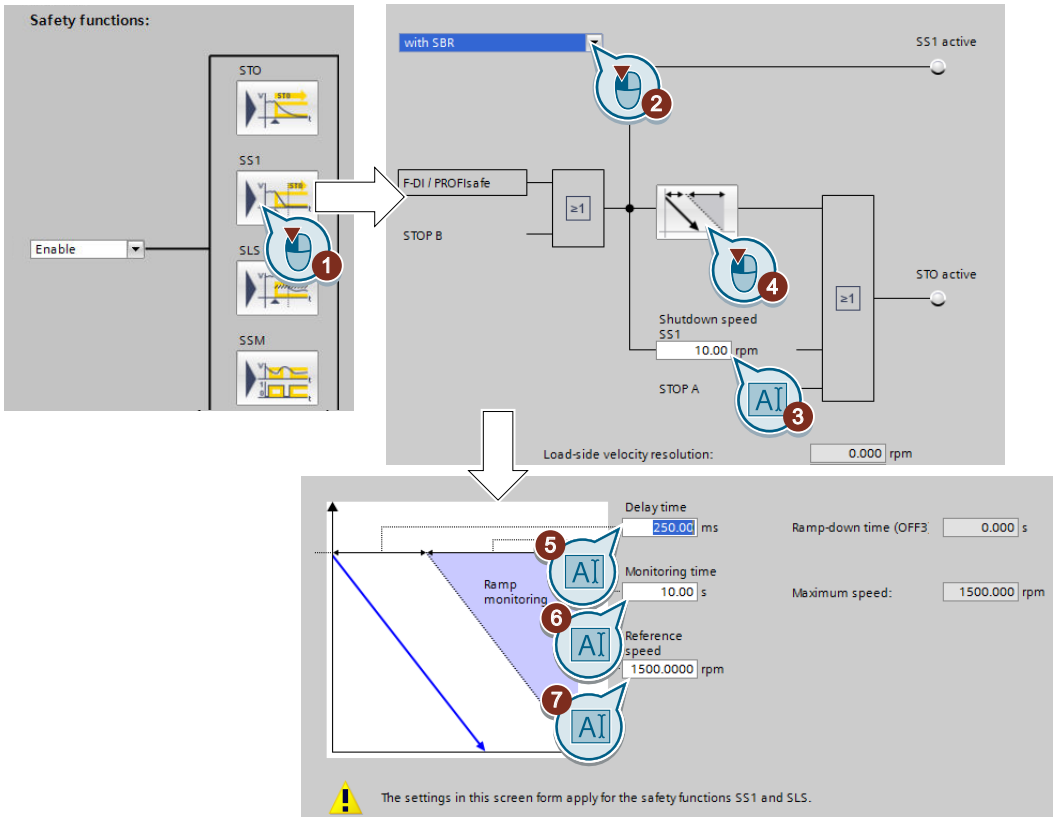


1. Press the button for the SS1 function.
2. Select "with SBR".
3. The shutdown speed SS1 is a condition for the transition into the STO function.
4. Press the "SBR" button.
5. If the ramp-down time (OFF3) in your application is less than 10 seconds, then leave the delay time at its factory setting. If SS1 goes into a fault condition during the function test, increase this value until the motor brakes normally without a fault.
   If the ramp-down time (OFF3) is set to several minutes, you must extend the delay time to several seconds in order to avoid any unwanted faults when selecting SS1.

6. The monitoring time defines the gradient of the monitoring curve when braking the load.
   If the monitoring curve should be parallel to the down ramp of the load, then you must set the following: **Monitoring time = ramp-down time (OFF3) / gear ratio**.
   Gear ratio = load/motor revolutions.
   Example: Gear ratio = 1 / 3 ⇒ monitoring time = ramp-down time (OFF3) × 3.
   A monitoring time shorter than the above calculated value does not make sense, as the inverter can reduce its monitoring curve faster than the load can be braked.
   The longer you set the monitoring times, the more tolerant the monitoring.
7. Set the reference speed to the value of the maximum speed.
8. Close the screen forms.

You have set the SS1 function with braking ramp monitoring.
❒

## Description: SS1 with braking ramp monitoring

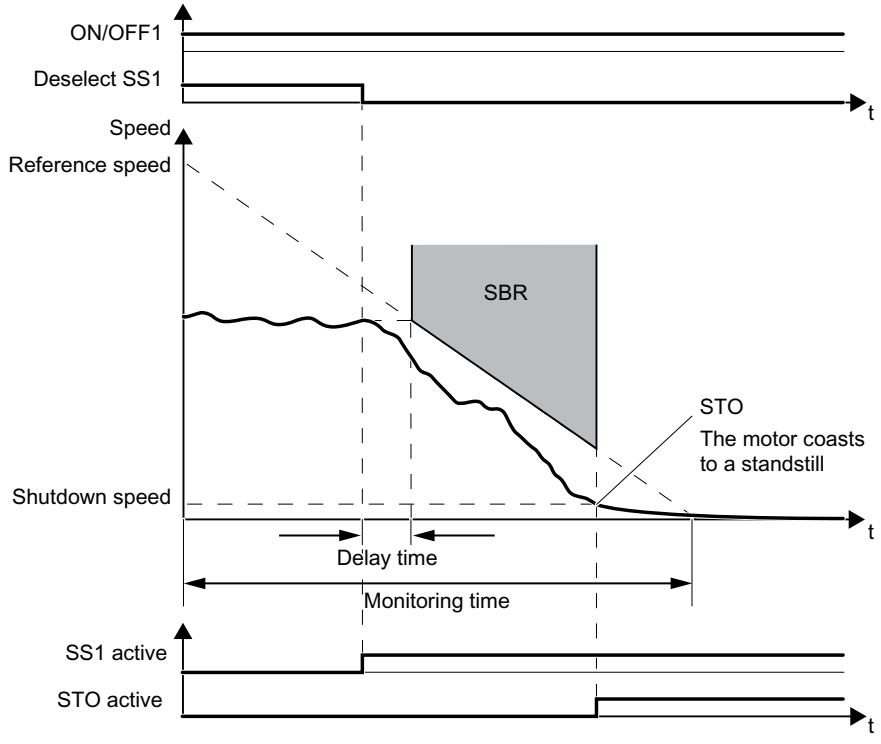


Figure 5-18 SS1 with braking ramp monitoring

### Reference speed and monitoring time

The two values define the gradient of the SBR monitoring .

### Delay time

The SBR function only starts after an adjustable time. To begin with, the inverter monitors the speed setpoint that applied when SS1 was selected.

### Braking

The inverter brakes the motor with the OFF3 ramp-down time.

### Shutdown speed

The inverter safely switches off the motor torque using the STO function if the speed has reached the shutdown speed.

| Parameter | Description | | |
|---|---|---|---|
| p9501.00 | **Enable safety functions**<br>**1 signal:** Enable extended functions.<br>**0 signal:** Disable extended functions. | | |
| p9506 | **Function specification:** (Factory setting: 1) | | |
| | 1: | With braking ramp monitoring | |
| | 3: | With acceleration monitoring | |
| p9546 | **SSM speed limit** (factory setting: 20 rpm)<br>Only relevant to the SS1 function if p9560 = 0. | | |
| p9560 | **Pulse cancellation shutdown speed** (factory setting: 10 rpm)<br>Shutdown speed | | |
| p9581 | **Brake ramp reference value** (factory setting: 1500 rpm)<br>Reference speed for SBR | | |
| p9582 | **Brake ramp delay time** (factory setting: 250 ms) | | |
| p9583 | **Brake ramp monitoring time** (factory setting: 10 s) | | |
| r9722.1 | **Status signals**<br>**1 signal**: SS1 active | | |
| r9714 | **Speed diagnostics** [rpm] | | |
| | [0] | **Load-side speed actual value**<br>Electrical speed of the motor. For induction motors, the mechanical speed is obtained from the electrical speed and slip. | |
| | [1] | **Actual SAM/SBR speed limit** | |
| r9723.16 | **1 signal**: SAM/SBR active | | |
| p1135 | **OFF3 ramp-down time** | | |
| p1226 | **Standstill detection, speed threshold** (Factory setting: 20 rpm) | | The inverter switches off the motor torque if the speed either fulfills the condition for standstill detection or the shutdown speed p9569 has been reached. |
| p1227 | **Standstill detection monitoring time** (Value depends on the power unit) | | |

### 5.11.5.2 Setting SS1 with acceleration monitoring

#### Requirement

You are online with Startdrive.

#### Procedure

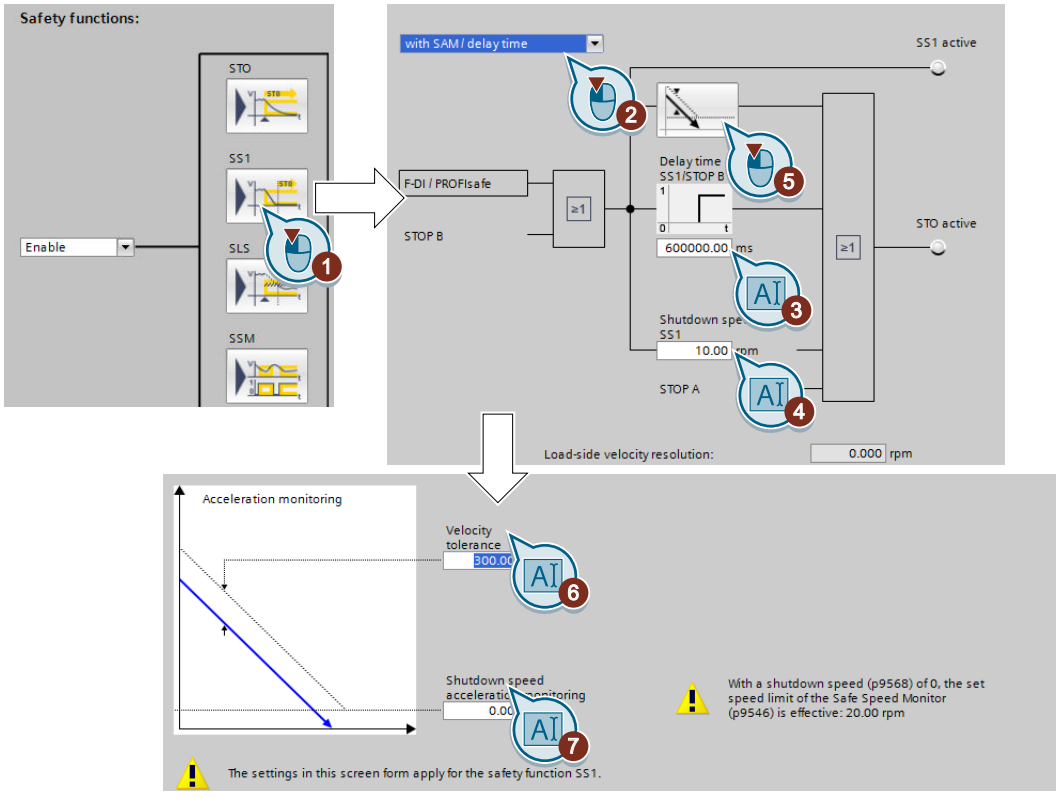


1. Press the button for the SS1 function.
2. Select "with SAM/delay time".
3. After the "delay time", the inverter safely switches off the motor torque – regardless of the actual speed.
4. The "shutdown speed SS1" is a condition for the transition into the STO function.
5. Press the "SAM" button.
6. The "speed tolerance" is used to track the monitoring to the actual speed.
7. The "shutdown speed acceleration monitoring" is a condition for the transition into the STO function.
8. Close the screen forms.

You have set the SS1 function with acceleration monitoring.
❐

## Description: SS1 with acceleration monitoring

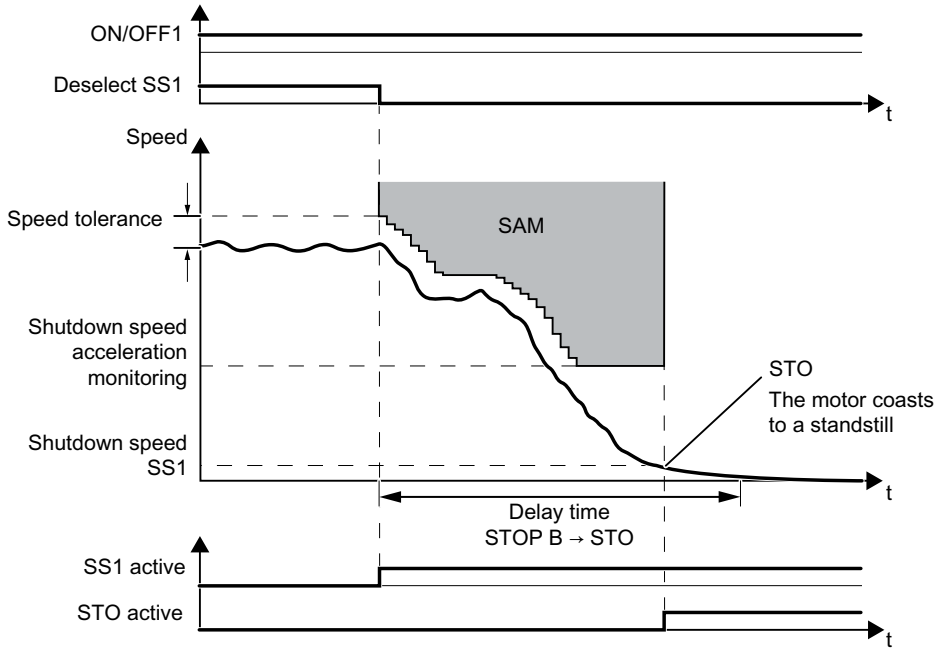


Figure 5-19 SS1 with acceleration monitoring

### Speed tolerance

As long as the speed is less, the inverter continuously adds the tolerance to the actual speed so that the monitoring tracks the speed.

### Shutdown speed acceleration monitoring

The inverter reduces the monitoring threshold until it reaches the value of the "Shutdown speed acceleration monitoring".

### Shutdown speed SS1 and delay time

The inverter safely switches off the motor torque with the STO function if one of the two conditions is fulfilled:

- The actual speed reaches the value of the shutdown speed SS1.
- The delay time has expired.

| Parameter | Description | |
|---|---|---|
| p9501.00 | **1 signal:** Enable extended functions.<br>**0 signal:** Disable extended functions. | |
| p9506 | **Function specification:** (Factory setting: 1) | |
| | 3: | With acceleration monitoring |
| p9548 | **Speed tolerance** (Factory setting: 300 rpm) | |
| p9556 | **Delay time STOP B → STO** (Factory setting: 600000 ms) | |
| p9560 | **Shutdown speed SS1** (Factory setting: 10 rpm) | |
| p9568 | **Shutdown speed acceleration monitoring** (Factory setting: 0 rpm) | |

| Parameter | Description | | |
|---|---|---|---|
| r9714 | **Speed diagnostics** [rpm] | | |
| | [0] | **Load-side speed actual value**<br>Electrical speed of the motor. For induction motors, the mechanical speed is obtained from the electrical speed and slip. | |
| | [1] | **Actual SAM/SBR speed limit** | |
| r9722.1 | **1 signal**: SS1 active | | |
| r9723.16 | **1 signal**: SAM/SBR active | | |
| p1226 | **Standstill detection, speed threshold** (Factory setting: 20 rpm) | | The inverter switches off the motor torque if the speed either fulfills the condition for standstill detection or the shutdown speed p9569 has been reached. |
| p1227 | **Standstill detection monitoring time** (Value depends on the power unit) | | |

## 5.11.6 Setting SLS

### 5.11.6.1 Setting the monitoring functions

#### Requirement

You are online with Startdrive.

#### Procedure

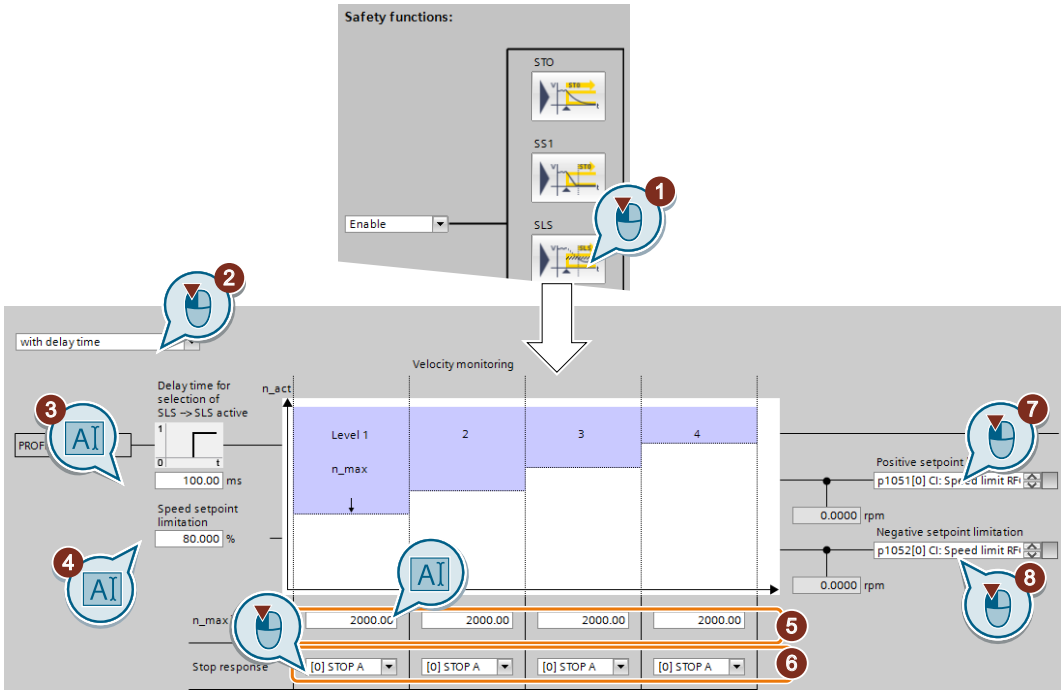

1. Press the button for the SLS function.
2. Select between one of the two monitoring modes:
   – with delay time
   – with SBR
3. If you have selected "with delay time"
   The delay time must be longer than the time, when SLS is selected, that the motor needs to brake with the maximum load from the maximum speed down to the lowest SLS level.
   If you have selected "with SBR": Press the button to set the safe braking ramp (SBR).
   Setting SS1 with braking ramp monitoring (Page 147)
4. Setpoint speed limiting as a % of the currently selected SLS level, see also ⑦, ⑧.
5. Load speed to be monitored.
   Levels 2 … 4 are only possible when PROFIsafe is selected as interface.
6. Response when monitoring responds.
   Stop responses (Page 255)
7. If you leave this signal interconnection at the factory setting, when SLS is selected, the inverter limits the speed setpoint in the positive direction.
8. If you leave this signal interconnection at the factory setting, when SLS is selected, the inverter limits the speed setpoint in the negative direction.
9. Close the screen form.

You have set the SLS function.
❒

## Description of the SLS function

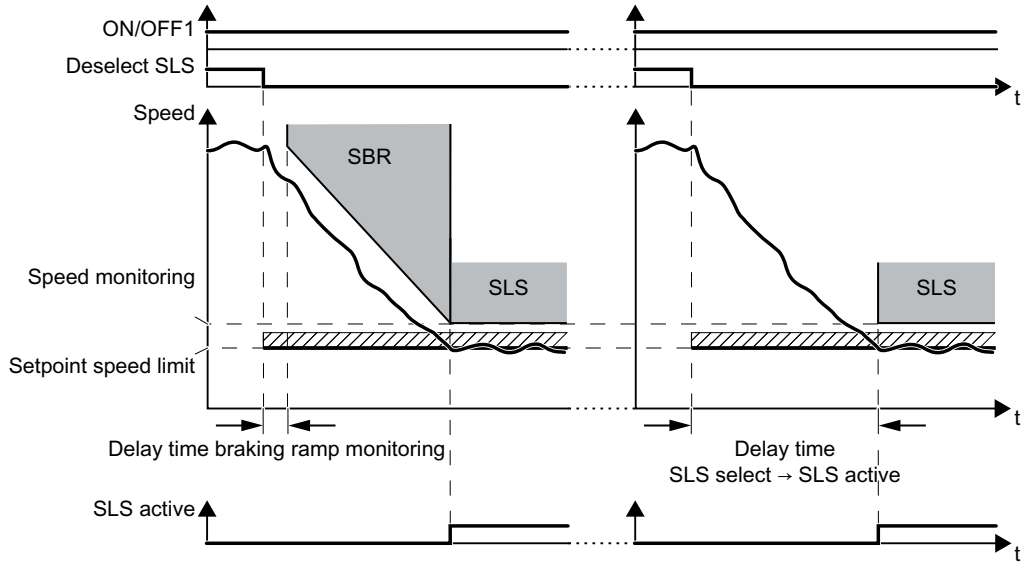


Figure 5-20 Behavior after selecting SLS. Left: with braking ramp monitoring; right: without braking ramp monitoring

After selecting SLS, the inverter brakes the motor according to the OFF3 ramp-down time.

Setting SS1 with braking ramp monitoring (Page 147)

| Parameter | Description | |
|---|---|---|
| p1051 | **Speed limit RFG positive direction of rotation** (Factory setting depends on the Control Unit) | |
| p1052 | **Speed limit RFG negative direction of rotation** (Factory setting depends on the Control Unit) | |
| p1135 | **OFF3 ramp-down time** | |
| p9501.00 | **Enable safety functions**<br>**1 signal:** Enable SLS and extended functions.<br>**0 signal:** Inhibit SLS and extended functions. | |
| p9506 | **Function specification:** (Factory setting: 1) | |
| | 1: | With braking ramp monitoring |
| | 3: | Without braking ramp monitoring |
| p9531[0…3] | **SLS limit values** (factory setting for all levels: 2000 rpm) | |
| p9533 | **SLS setpoint speed limiting** (factory setting: 80 %)<br>The inverter limits the setpoint to the value r9733.<br>r9733[0] = p9531[x] × p9533. | |
| p9551 | **SLS changeover delay time** (factory setting: 100 ms)<br>Delay time SLS selection → SLS active, inactive for brake ramp monitoring | |
| p9563[0…3] | **SLS-specific stop response** (Factory setting: STOP A) | |
| | 0: | STOP A |
| | 1: | STOP B |
| p9581 | **Brake ramp reference value** (factory setting: 1500 rpm)<br>Reference speed for SBR | |
| p9582 | **Brake ramp delay time** (factory setting: 250 ms) | |
| p9583 | **Brake ramp monitoring time** (factory setting: 10 s)<br>The gradient of the braking ramp depends on p9581 and p9583. | |
| r9714 | **Speed diagnostics** [rpm] | |
| | [0] | **Load-side speed actual value**<br>Electrical speed of the motor. For induction motors, the mechanical speed is obtained from the electrical speed and slip. |
| | [1] | **Actual SAM/SBR speed limit** |
| | [2] | **Actual SLS speed limit** |
| r9722.04 | **Status signals**<br>**1 signal:** SLS active<br>**0 signal:** SLS not active | |
| r9733 | **Effective setpoint speed limiting** | |
| | [0] | Positive setpoint limitation |
| | [1] | Negative setpoint limitation |
| | [2] | Absolute setpoint speed limitation |

### 5.11.6.2 Settings for acceptance test

In order to be able to approach the monitoring limit of the safety function during the acceptance test, you must temporarily deactivate speed limiting of the inverter.

#### Requirement

You are online with Startdrive.

#### Procedure

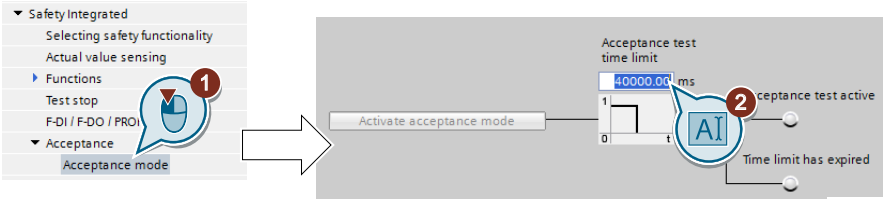


1. Open the screen form for the "Acceptance mode".
2. Set the time in which the inverter deactivates its internal speed limiting. During the acceptance test, you must reach the monitored limit value within this time.
   After this time expires, the inverter exits the acceptance mode and reactivates its internal speed limiting.

You have made the preparations for the function to be accepted.
❒

| Parameter | |
|---|---|
| p9558 | **Acceptance test mode time limit** (factory setting 40000 ms)<br>Maximum time limit: 100 seconds. |

## 5.11.7 Setting SSM

### Requirement

You are online with Startdrive.

### Procedure

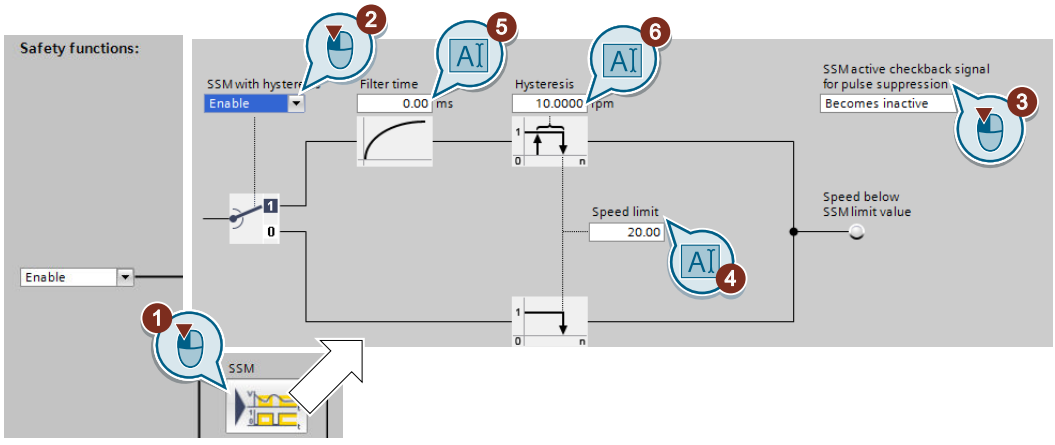


1. Open the screen form for the SSM safety function.
2. Selects the function with or without hysteresis.
3. Set the behavior when the motor is switched off.
   If you have set the SSM feedback signal for pulse cancellation as "remains active", when switching on the motor, you must maintain a specific signal sequence.
   Switching on the motor when SSM is active (Page 239)
4. Set the speed to be monitored.
5. You only have to set the filter time when the hysteresis ② is enabled.
6. You only have to set the hysteresis when hysteresis is enabled ②.

You have set the SSM function.
❒

The SSM function is active immediately after commissioning has been completed.

## SSM without hysteresis

### Speed monitoring

- When the motor is switched on, the inverter compares the load speed with the speed limit.

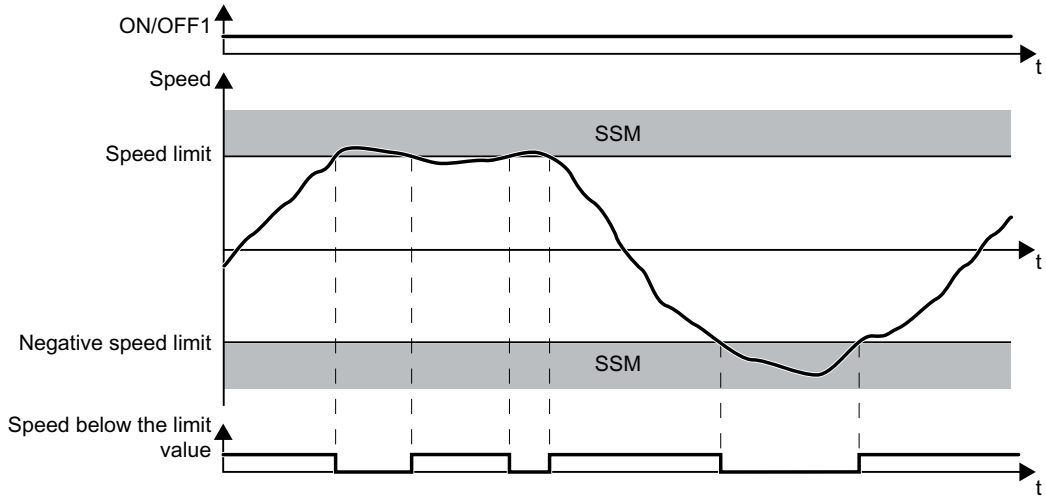


Figure 5-21 Time response of the SSM safety function without hysteresis

| Parameter | Description |
|---|---|
| p9501.00 | **1 signal:** Enable extended functions.<br>**0 signal:** Disable extended functions. |
| p9501.16 | **1 signal:** Enable hysteresis and filtering<br>**0 signal:** Disable hysteresis and filtering |
| p9546 | **Speed limit** (Factory setting: 20 rpm) |
| r9714[0] | **Load-side speed actual value** [rpm]<br>Electrical speed of the motor. For induction motors, the mechanical speed is obtained from the electrical speed and slip. |
| r9722.15 | **1 signal**: Absolute value of the speed is lower than the speed limit |

## SSM with hysteresis

If you wish to monitor speeds that are very close to the speed limit, you may find it useful to set the hysteresis.

### Speed monitoring

- When the motor is switched on, the inverter compares the load speed with the speed limit, taking the hysteresis into account.

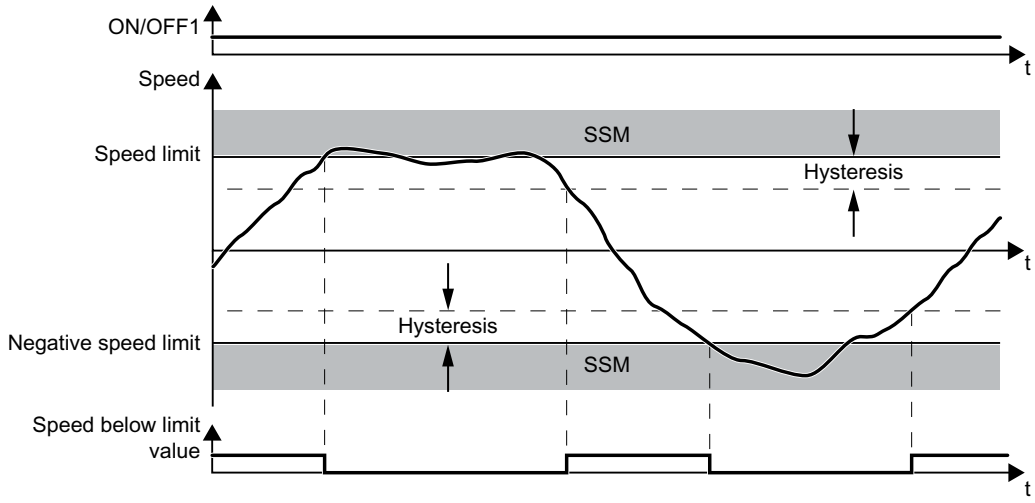


Figure 5-22 Time response of the SSM safety function with hysteresis

### Filter

The signal filters smoothes the speed measured by the inverter. Use the filter if you wish to monitor speeds that lie just below the speed limit.

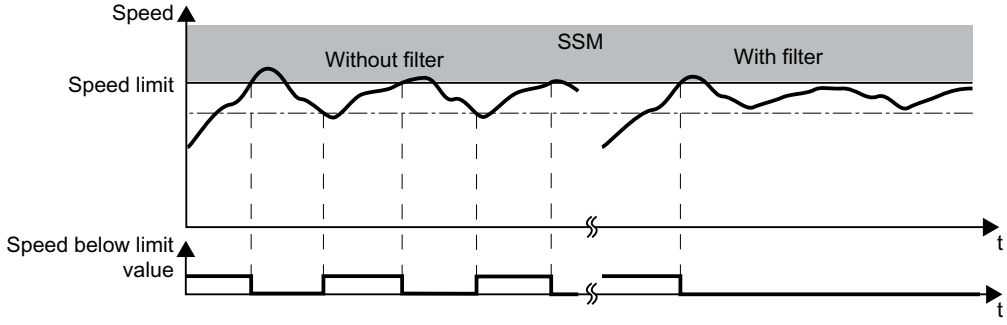


Figure 5-23 Mode of operation of the filter of the SSM function

| Parameter | Description |
|---|---|
| p9501.00 | **1 signal:** Enable extended functions.<br>**0 signal:** Disable extended functions. |
| p9501.16 | **1 signal:** Enable hysteresis and filtering<br>**0 signal:** Disable hysteresis and filtering |
| p9545 | **Filter time** (Factory setting: 0 ms) |
| p9546 | **Speed limit** (Factory setting: 20 rpm) |
| p9547 | **Hysteresis** (Factory setting: 10 rpm) |
| r9714[0] | **Load-side speed actual value** [rpm]<br>Electrical speed of the motor. For induction motors, the mechanical speed is obtained from the electrical speed and slip. |
| r9722.15 | **1 signal**: Absolute value of the speed is lower than the speed limit |

### Feedback signal SSM when the motor is switched off

You can select as to whether the SSM function should remain active when the motor is switched off.

The following occurs if SSM remains active:

- With the motor switched off, the inverter freezes the "Speed below limit value" signal.
- When the motor is switched off, STO is active.

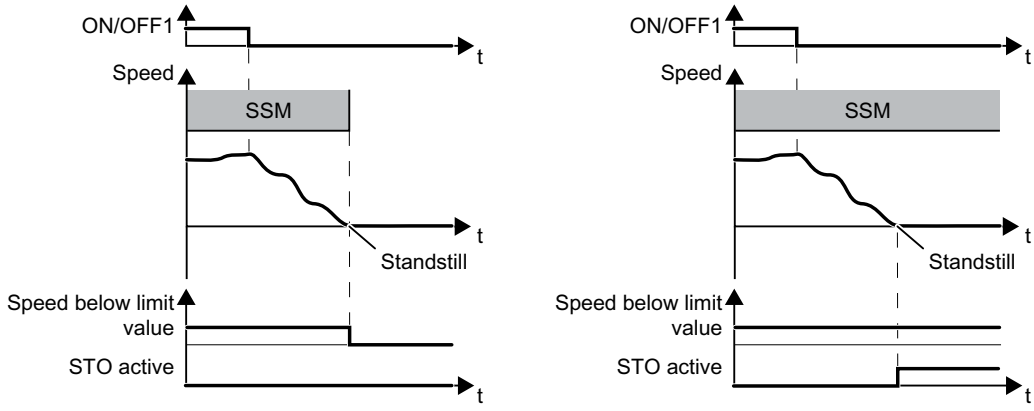


Figure 5-24 Feedback signal SSM when the motor is switched offLeft: SSM becomes inactive. Right: SSM remains active

Switching off the motor when SSM is active (Page 235)

| Parameter | Description |
|---|---|
| p9509.00 | **1 signal:** SSM becomes inactive when the motor is switched off<br>**0 signal:** SSM remains active when the motor is switched off |

## 5.11.8 Setting SDI

### 5.11.8.1 Setting the monitoring functions

#### Requirement

You are online with Startdrive.

### Procedure

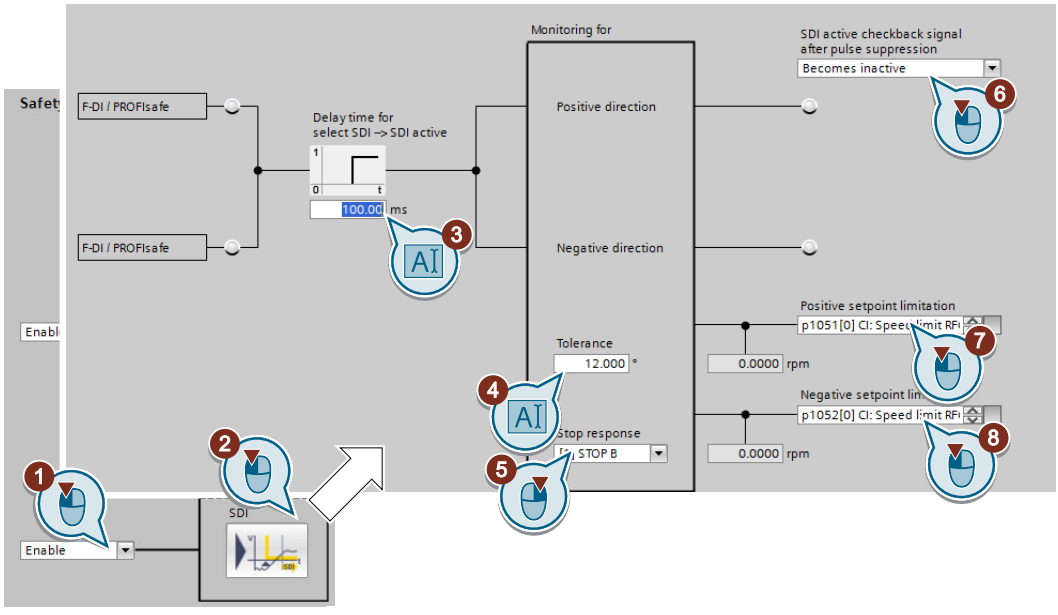


1. Enable the SDI safety function.
2. Press the button for the SDI safety function.
3. Delay time up to active monitoring.
4. Tolerance for motion in the monitored direction.
5. Response when the monitoring function responds.
   Stop responses (Page 255)
6. Behavior when the motor is switched off.
   Switching off the motor when SDI is active (Page 244)
7. If you leave this signal interconnection at the factory setting, when SDI- is selected, the inverter limits the speed setpoint.
8. If you leave this signal interconnection at the factory setting, when SDI+ is selected, the inverter limits the speed setpoint.
9. Close the screen form.

You have set the SDI function.
❐

## The SDI function

### Time response

If you select SDI, the inverter limits the speed or velocity setpoint to a value of zero in the inhibited direction of rotation.

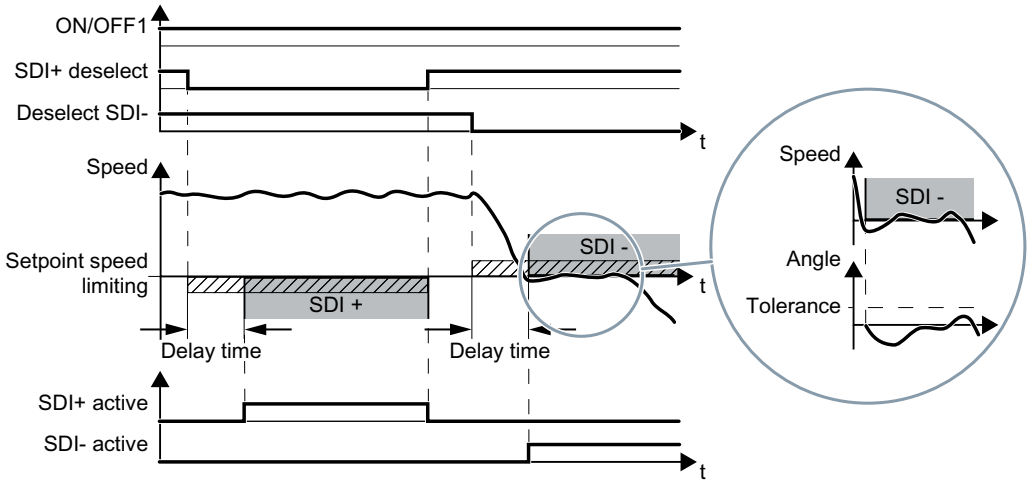


Figure 5-25 Delay time and tolerance

### Delay time

The inverter monitors the direction of rotation of the motor after the delay time has expired. When SDI is selected, the delay time must be longer than the time that the motor requires to brake the maximum load from maximum speed down to standstill. The inverter brakes the motor with the OFF3 ramp-down time.

### Tolerance

The inverter permits brief motion in the monitored direction, for example for brief speed overshoots after braking down to standstill. To do this, the inverter converts the motor speed into an angle. With the tolerance, you limit the maximum permissible angle in the monitored direction.

### Feedback signal SDI when the motor is switched off

You can select as to whether the SDI function should remain active when the motor is switched off.

- With the motor switched off, the inverter freezes the "SDI active" signal.
- When the motor is switched off, STO is active.

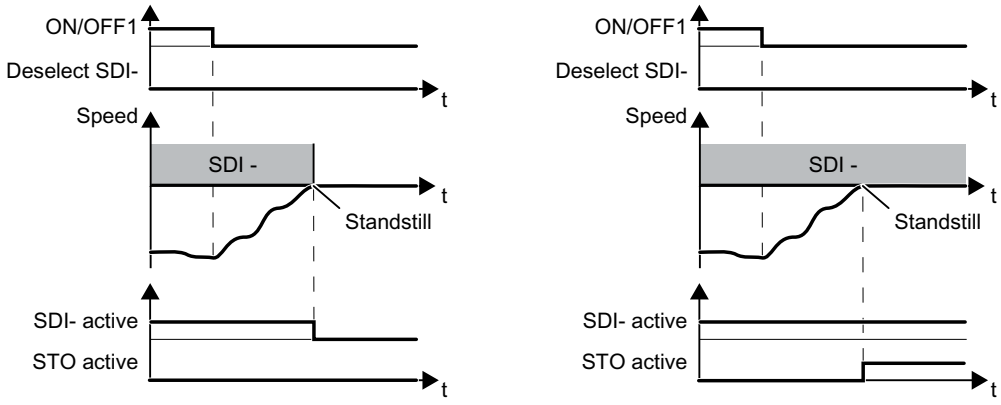


Figure 5-26 Feedback signal SDI when the motor is switched offLeft: SDI becomes inactive. Right: SDI remains active

Switching off the motor when SDI is active (Page 244)

| Parameter | Description | |
|---|---|---|
| p1051 | **Speed limit RFG positive direction of rotation** (Factory setting depends on the Control Unit) | |
| p1052 | **Speed limit RFG negative direction of rotation** (Factory setting depends on the Control Unit) | |
| p1135 | **OFF3 ramp-down time** | |
| p9501.00 | **1 signal:** Enable extended functions.<br>**0 signal:** Disable extended functions. | |
| p9501.17 | **1 signal:** Enable SDI<br>**0 signal:** Inhibit SDI | |
| p9509.08 | **1 signal:** SDI becomes inactive when the motor is switched off<br>**0 signal:** SDI remains active when the motor is switched off | |
| p9564 | **Tolerance** (Factory setting: 12 degrees) | |
| p9565 | **Delay time** (Factory setting: 100 ms) | |
| p9566 | **Stop response** (Factory setting: 1) | |
| | 0: | STOP A |
| | 1: | STOP B |
| r9714[0] | **Load-side speed actual value** [rpm]<br>Electrical speed of the motor. For induction motors, the mechanical speed is obtained from the electrical speed and slip. | |
| r9722.12 | **1 signal:** SDI positive active | |
| r9722.13 | **1 signal:** SDI negative active | |
| r9733 | **Effective setpoint speed limiting** | |
| | [0] | Positive setpoint limitation |
| | [1] | Negative setpoint limitation |
| | [2] | Absolute setpoint speed limitation |

### 5.11.8.2 Settings for acceptance test

In order to be able to approach the monitoring limit of the safety function during the acceptance test, you must temporarily deactivate speed limiting of the inverter.

#### Requirement

You are online with Startdrive.

#### Procedure

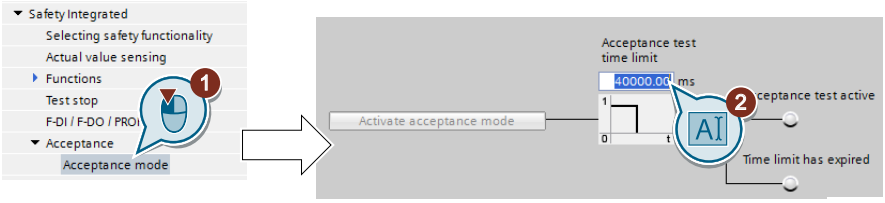


1. Open the screen form for the "Acceptance mode".
2. Set the time in which the inverter deactivates its internal speed limiting. During the acceptance test, you must reach the monitored limit value within this time.
   After this time expires, the inverter exits the acceptance mode and reactivates its internal speed limiting.

You have made the preparations for the function to be accepted.
❒

| Parameter | |
|---|---|
| p9558 | **Acceptance test mode time limit** (factory setting 40000 ms)<br>Maximum time limit: 100 seconds. |

## 5.11.9 Final steps when commissioning online

### Activate settings

#### Requirement

You are online with Startdrive.

### Procedure

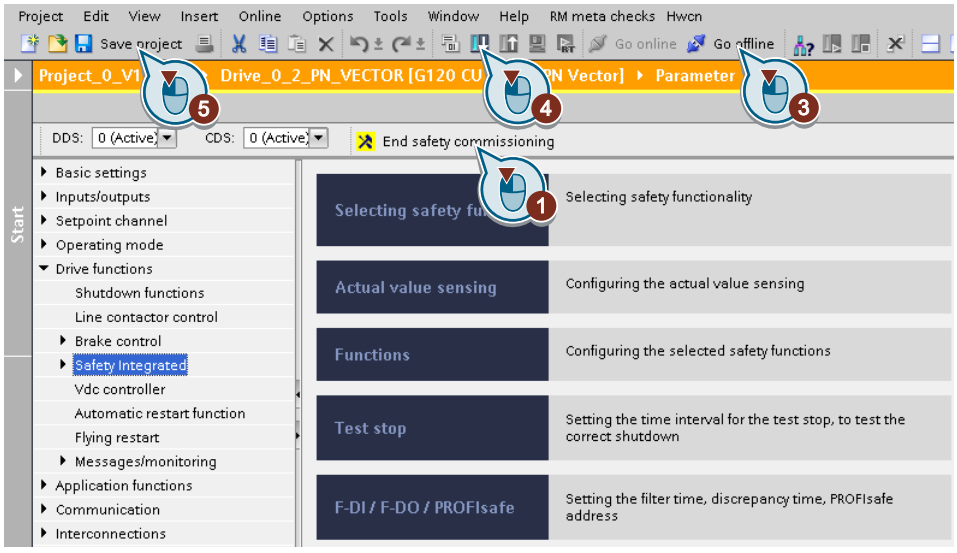


1. Press the "End safety commissioning" button.
2. Confirm the prompt for saving your settings (copy RAM to ROM).
3. Disconnect the online connection.
4. Select the "Load from device (software)" button.
5. Save the project.
6. Switch off the inverter power supply.
7. Wait until all LEDs on the inverter go dark (no voltage condition).
8. Switch the inverter power supply on again.

Your settings are now active.
❐

| Parameter | Description |
|---|---|
| p9700 = 57 hex | **SI copy function** (factory setting: 0)<br>Start SI parameter copy function. |
| p9701 = AC hex | **Confirm data change** (factory setting: 0)<br>Confirm total data change. |
| p0010 = 0 | **Drive commissioning parameter filter**<br>0: Ready |
| p0971 = 1 | **Save parameter**<br>1: Save the drive object (copy from RAM to ROM)<br>After the inverter has saved the parameters in a non-volatile fashion, then p0971 = 0. |

## Checking the interconnection of digital inputs

The simultaneous connection of digital inputs with a safety function and a "standard" function may lead to the drive behaving in unexpected ways.

If you control the safety functions in the inverter via failsafe digital inputs, then you must check as to whether the failsafe digital inputs are in some instances interconnected with a "standard" function.

### Procedure

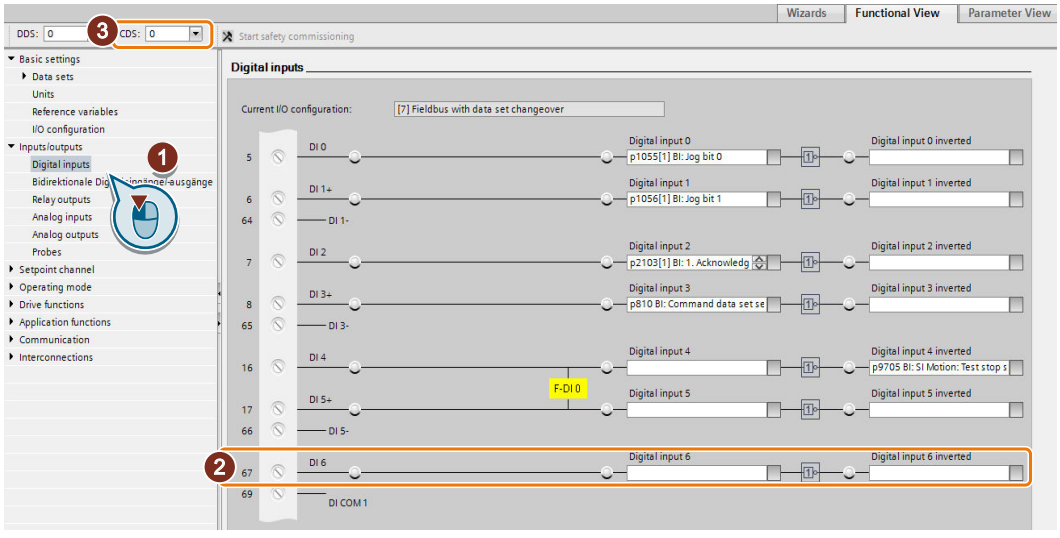


1. Select the screen for the digital inputs.
2. Remove all interconnections of the digital inputs that you use as failsafe digital input F-DI:
3. You must delete the digital input connections for all CDS if you use the switchover of the command data sets (CDS).
   You can find a description of the CDS switchover in the operating instructions.

You have ensured that the failsafe digital inputs only control the safety functions in the inverter. ❐

## Checking the interconnection of the feedback signal input for the failsafe digital output

The interconnection of the feedback signal input with a "standard" function may lead to the drive behaving in unexpected ways.

### Requirements

- You are using the failsafe digital output of the inverter.
- You use one of the test modes 2 or 3, where the inverter evaluates the status of the connected actuator via a digital input.

You must check whether this digital input is assigned a "Standard" function.

## Procedure

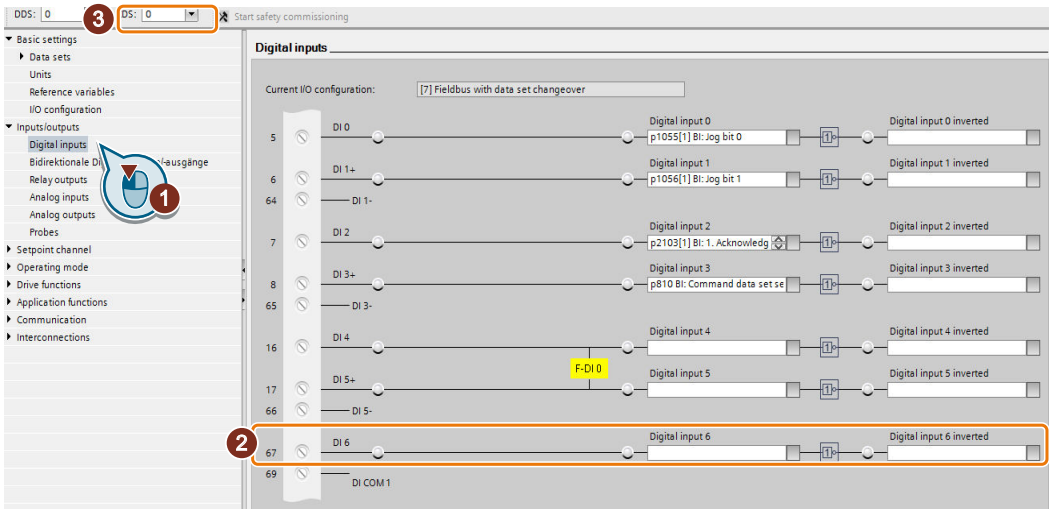


Figure 5-27 Removing the interconnection of the feedback signal input DI 6 for the CU250S-2

1. Select the digital inputs.
2. Remove the interconnection of the digital input that you use as feedback signal input for the failsafe digital output:
   - SINAMICS G120 with CU250S-2 Control Unit: Digital input DI 6 (see diagram).
   - SINAMICS G120D: Digital input DI 5.
3. If you are using several command data sets (CDS), then remove the interconnection of the feedback signal input for all CDS.

You have now prevented the feedback signal input of the failsafe digital output controlling "Standard" functions in the inverter.
❐

## 5.12 Activating Shared Device

### Enabling Shared Device

If you control the inverter safety functions via PROFINET and "Shared Device", you must enable this function in the inverter.

#### Requirement

You are online with Startdrive.

#### Procedure

1. In Startdrive, switch to the parameter view.
2. Set p8929 = 2.

You have configured the communication via "Shared Device" in the inverter.
❐

## 5.13 Starting communication via PROFIsafe

### Starting communication via PROFIsafe

When you connect the converter to the higher-level control system (F-CPU) via the fieldbus for the first time, the central control system sends the PROFIsafe configuration to the converter. After the configuration data have been received in the converter, PROFIsafecommunication starts.

The converter only monitors the communication to the F-CPU after the configuration data have been received from the central control system.

## 5.14 Commissioning with Startdrive offline

When you set the safety function parameters offline, you have to download the settings to the inverter. Once you have downloaded them, you have to finish commissioning the safety functions online.

### Setting the safety functions offline

**Procedure**

1. Select the safety functions in Startdrive.
2. Set the safety function parameters offline.
   When doing this, orient yourself to the descriptions provided in the online commissioning.
   Configuring the safety functions and PROFIsafe (Page 109)
3. Back up your project.

You have set the safety functions of the inverter offline, and saved them to your PC or PG.
❐

In the next step, you must load the settings from your PC or PG to the inverter.

### Loading the settings into an inverter and activating the safety functions

**Procedure**

1. In Startdrive, open the project that matches the drive.
2. Select "Load to device".
3. Connect Startdrive online with the drive.
   The inverter signals faults after the download. Ignore these faults, as they will be automatically acknowledged by the following steps.
4. Press the "Start safety commissioning" button.
5. Enter the password for the safety functions.
6. Press the "End safety commissioning" button.
7. Confirm the prompt for saving your settings (copy RAM to ROM).
8. Switch off the inverter power supply.
9. Wait until all LEDs on the inverter are dark.
10. Switch the inverter power supply on again.
11. Perform an acceptance test.
    Reduced acceptance test after expanding the function (Page 173)

You have loaded the settings of the safety functions from the Startdrive project to the inverter, and have activated the safety functions.
❐

## 5.15 Series commissioning

Series commissioning is the process where you transfer the settings of one inverter to a second inverter.

### Procedure

1. Save your project to your PC or PG.
2. Loading your backed up settings to a second inverter:
   Commissioning with Startdrive offline (Page 169)
3. If you control your inverter via PROFIsafe, you have to modify the PROFIsafe address.
   Selecting configuration of the safety functions (Page 107)
4. Accept the safety functions.
   Reduced acceptance test after expanding the function (Page 173)

You have transferred the settings of the first inverter to a second inverter.
❐

# 5.16 Acceptance tests for the safety functions

## 5.16.1 Acceptance - completion of commissioning

### What is an acceptance?

The machine manufacturer is responsible in ensuring that his plant or machine functions perfectly. As a consequence, after commissioning, the machine manufacturer must check those functions or have them checked by specialist personnel, which represent an increased risk of injury or material damage. This acceptance or validation is, for example, also specified in the European machinery directive and essentially comprises two parts:

- Checking the safety-relevant functions and machine parts.
  → **Acceptance test**.
- Generate an "Acceptance report" that describes the test results.
  → **Documentation**.

Supply information for the validation, e.g. the harmonized European standards EN ISO 13849-1 and EN ISO 13849-2.

### Acceptance test of the machine or plant

The acceptance test checks whether the safety-relevant functions in the plant or machine function correctly. The documentation of the components used in the safety functions can also provide information about the necessary tests.

Testing the safety-related functions includes, e.g. the following:

- Are all safety equipment such as protective door monitoring devices, light barriers or emergency-off switches connected and ready for operation?
- Does the higher-level control respond as expected to the safety-relevant feedback signals of the inverter?
- Do the inverter settings match the configured safety-relevant function in the machine?

### Acceptance test of the inverter

The acceptance test of the inverter is a part of the acceptance test of the entire machine or plant.

The acceptance test of the inverter checks whether the integrated drive safety functions are set up correctly for the planned safety function of the machine.

Examples of acceptance tests (Page 340)

## Documentation of the inverter

The following must be documented for the inverter:

- The results of the acceptance test.
- The settings of the integrated drive safety functions.

The documentation must be signed.

## Who may perform the acceptance test of the inverter?

Personnel from the machine manufacturer, who, on account of their technical qualifications and knowledge of the safety functions, are in a position to perform the acceptance test in the correct manner are authorized to perform the acceptance testing of the inverter.

## Wizard for the acceptance test

The "Startdrive Advanced" commissioning tool (requires an appropriate license) includes a wizard for the acceptance test of the safety functions integrated in the drive.

"Startdrive Advanced" guides you through the acceptance test, generates the appropriate traces to analyze the machine response – and generates an acceptance report as Excel file.

Further information is provided on the Internet:

Startdrive, system requirements and download (https://support.industry.siemens.com/cs/ww/en/view/109752254)

### 5.16.2 Reduced acceptance test after expanding the function

A full acceptance test is necessary only after first commissioning. A reduced acceptance test is sufficient when safety functions are expanded.

Table 5-1 Reduced acceptance test after expanding the function

| Measure | Acceptance test | Documentation |
|---|---|---|
| Changing a single limit (e.g. SLS level). | Check the modified limit value. | • Supplement function table<br>• Log modified settings<br>• Document the changed checksum and time stamp [1)]<br>• Countersignature |
| Functional expansion of the machine (additional drive). | Check the safety functions of the new drive. | • Supplement machine overview<br>• Supplement article number and firmware version of the drive<br>• Supplement function table<br>• Log the settings of the new drive<br>• Document the changed checksum and time stamp [1)]<br>• Countersignature |
| Functional expansion of a drive (e.g. additional SLS level or new safety function following a firmware update). | Check the additional functions. | • Supplement function table<br>• Log modified settings<br>• Document the changed checksum and time stamp [1)]<br>• Countersignature |
| Transfer of inverter settings to other identical machines by means of series commissioning. | Check the control and feedback signal of all safety functions. | • Supplement machine description<br>• Log modified settings<br>• Check the changed checksum and time stamp [1)]<br>• Check the firmware versions |

[1)] The inverter changes the following parameters after changing the settings of the safety functions:

- checksum r9781

- time stamp r9782

Reduced acceptance after a component has been replaced and a firmware change (Page 323)

# Operation 6

## 6.1 About this chapter

### What can you find in this Chapter?

In this chapter, you will find answers to the following questions:

- What do I have to do to maintain the guaranteed failure probability of the safety functions during the mission time?
- How does the drive respond when you select and deselect one of the safety functions?
- What do I need to observe when the motor is switched off or switched on with a safety function active?
- How does the drive respond to a discrepancy signal at a fail-safe digital input?
- How does the drive respond to limit value violations or if internal monitoring functions respond?
- How do I acknowledge safety function faults?
- How do the safety functions mutually influence one another, if I select more than one safety function?
- What do the alarm and fault messages of the safety functions mean?

# 6.2 Regularly testing the safety functions

## 6.2.1 Overview

### Safety functions according to SIL 2 to IEC 61508 and to PI d according to EN ISO 13849

You must initiate the following function tests as a minimum once per year in order to maintain the assured failure probability of the safety functions:

- The inverter must test its fail-safe digital input if you are using a fail-safe digital input.
  Testing fail-safe digital inputs (Page 177)
- The inverter must test its safety functions:
  Testing the basic functions (Page 178)
  Testing the extended functions (Page 180)
- The inverter must test its fail-safe digital output if you are using a fail-safe digital output.
  Testing a fail-safe digital output (Page 182)

### Safety functions according to SIL 3 to IEC 61508 and to PI e according to EN ISO 13849

You must initiate the following function tests at least once every three months in order to maintain the guaranteed failure probability of the "STO via Power Module terminals" function:

- The inverter must test the fail-safe digital input on the Power Module.
  Testing fail-safe digital inputs (Page 177)
- The inverter must test the "STO via Power Module terminals" function.
  Testing the basic functions (Page 178)

## 6.2.2 Testing fail-safe digital inputs

### Testing sensors and failsafe digital inputs

The inverter tests its failsafe digital inputs and the connected sensors with a signal change at the inputs. We recommend that you test the failsafe digital inputs together with the forced checking procedure (test stop).

#### Procedure

1. Actuate the relevant sensor.
2. Check the following:
   - The expected safety function is active.
   - The inverter signals a fault.

You have tested the failsafe digital inputs.
❒

| Inverter signal | Parameter | Included in the PROFIsafe telegram | Can be interconnected with | |
|---|---|---|---|---|
| | | | F-DI | F-DO |
| Internal event | r9722.7 | ✓ | --- | ✓ |
| STO active (Basic Functions) | r9773.1 | ✓ | --- | ✓ |
| STO active (Extended Functions) | r9722.0 | ✓ | --- | ✓ |
| SS1 active (Basic Functions) | r9773.6 | ✓ | --- | ✓ |
| SS1 active (Extended Functions) | r9722.1 | ✓ | --- | ✓ |
| SLS active | r9722.4 | ✓ | --- | ✓ |
| SDI+ active | r9722.12 | ✓ | --- | ✓ |
| SDI- active | r9722.13 | ✓ | --- | ✓ |

### 6.2.3 Testing the basic functions

#### Time

The inverter monitors as to whether the self test (= forced checking procedure, test stop) is regularly started.

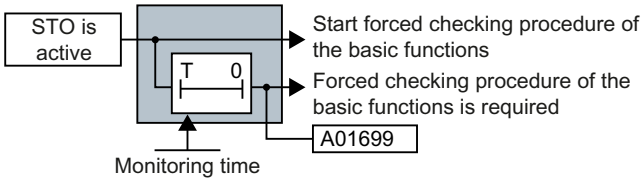


Figure 6-1 Starting and monitoring the forced checking procedure (test stop)

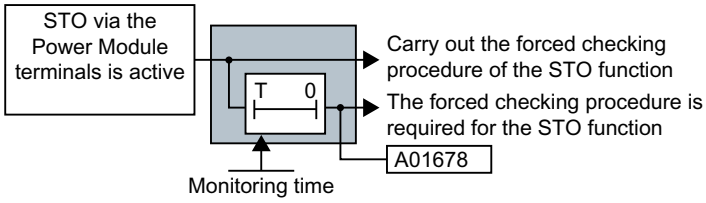


Figure 6-2 Start and monitoring of the forced checking procedure (test stop) for STO via Power Module terminals

In the case of alarms A01699 and A01678, you must initiate a self test at the next opportunity, e.g.:

- When the drives are at a standstill after the system has been switched on.
- When a protective door is opened.
- At specified regular intervals before the monitoring time expires.

| Inverter signal | Parameter | Included in the PROFIsafe telegram | Can be interconnected with | |
|---|---|---|---|---|
| | | | F-DI | F-DO |
| STO active (Basic Functions) | r9773.1 | ✓ | --- | ✓ |
| Deselect STO (Basic Functions) | r9773.0 | ✓ | ✓ | --- |
| STO cause – selection via Power Module terminals | r9772.25 | --- | --- | --- |
| Forced checking procedure (test stop) for the "STO via Power Module terminals" function | r9773.30 | --- | --- | --- |
| Forced checking procedure (test stop) required for the Basic Functions | r9773.31 | --- | --- | --- |

## Carry out a forced checking procedure of the Basic Functions

### Requirements

- STO is not active.
- The motor is switched on (ON/OFF1 = 1), and is at a standstill (speed setpoint = 0).

### Procedure

1. Select the STO function.
2. The inverter checks its safety-related circuits. This check takes several milliseconds.
3. Deselect the STO function.
4. Check that alarm A01699 is no longer present.

You have performed the forced checking procedure.
❒

## Carry out the forced checking procedure of the "STO via Power Module terminals" function

### Requirements

- STO is not active.
- The motor is switched on (ON/OFF1 = 1), and is at a standstill (speed setpoint = 0).

### Procedure

1. Select the "STO via Power Module terminals" function.
2. The inverter checks its safety-related circuits. This check takes several milliseconds.
3. Deselect the "STO via Power Module terminals" function.
4. Check that alarm A01678 is no longer active.

You have performed the forced checking procedure.
❒

## 6.2.4 Testing the extended functions

### Time

The inverter monitors as to whether the self test (= forced checking procedure, test stop) is regularly started.

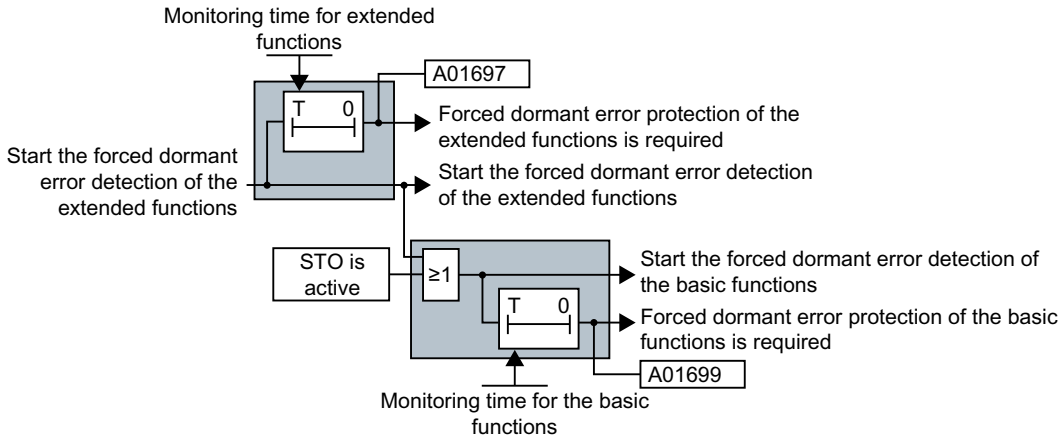


Figure 6-3 Starting and monitoring the forced checking procedure (test stop)

If the inverter outputs alarm A01699 or A01697, you must initiate a forced checking procedure at the next opportunity, e.g.:

- When the system is switched on.
- At specified regular intervals before the monitoring time expires.

| Inverter signal | Parameter | Included in the PROFIsafe telegram | Can be interconnected with | |
|---|---|---|---|---|
| | | | F-DI | F-DO |
| STO active (Basic Functions) | r9773.1 | ✓ | --- | ✓ |
| STO cause, selection via terminal on the Power Module | r9772.25 | --- | --- | --- |
| STO active (Extended Functions) | r9722.0 | ✓ | --- | ✓ |
| Forced checking procedure (test stop) required for the Basic Functions | r9773.31 | --- | --- | --- |
| Forced checking procedure (test stop) required for the Extended Functions | r9723.0 | --- | --- | --- |
| Start forced checking procedure (Extended Functions) | p9705 | --- | --- | --- |

### Performing a forced checking procedure (test stop)

When testing the Extended Functions, the inverter switches the motor into a no-torque condition.

### Requirements

- STO is not active.
  If you start the forced checking procedure with STO active, then the inverter responds with a fault.
- The motor is switched on (ON/OFF1 = 1), and is at a standstill (speed setpoint = 0).

### Procedure

1. Start the forced checking procedure using a signal of your choice, for example a digital input.
2. The inverter checks its safety-related circuits. During the check, the inverter outputs alarms C01798 and C30798. This check takes several milliseconds.
3. Set the signal to start the forced checking procedure to zero.
4. Check that neither alarm A01699 nor alarm A01697 is active.
5. Check the failsafe digital outputs of the inverter.
   Testing fail-safe digital inputs (Page 177)
6. Check the failsafe digital output of the inverter.
   Testing a fail-safe digital output (Page 182)

You have performed the forced checking procedure of the Extended Functions.
❐

## 6.2.5 Testing a fail-safe digital output

### Time of the test

The inverter monitors that the test is regularly performed using a time block.

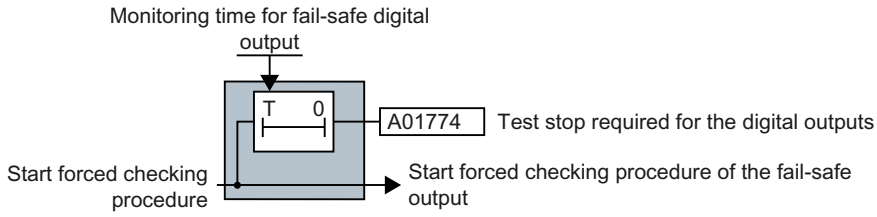


Figure 6-4 Start and monitoring of the forced checking procedure (test stop) of the failsafe digital output

If the inverter outputs alarm A01774, you must initiate the test at the next opportunity, e.g.:

- When the system is switched on.
- At specified regular intervals before the monitoring time expires.

| Inverter signal | Parameter | Included in the PROFIsafe telegram | Can be interconnected with | |
|---|---|---|---|---|
| | | | F-DI | F-DO |
| Forced checking procedure (test stop) required for the Extended Functions | r9723.0 | --- | --- | --- |
| Start forced checking procedure (test stop) of the failsafe digital output | p10007 | --- | --- | --- |

### Testing the failsafe digital output and the connected actuator

The inverter tests its failsafe digital output and the connected actuator for a signal change at the failsafe digital output.

#### Procedure

1. Switch on the motor (ON/OFF1 command = 1).
   If you wish to carry out the forced checking procedure at standstill, the speed setpoint must be = 0.
2. Start the test using a signal of your choice, for example a digital input.
3. The inverter briefly switches off the failsafe digital output. This test takes several milliseconds.
4. Set the signal to start the forced checking procedure to zero.
5. Check that alarm A01774 is no longer present.

You have tested the failsafe digital output.
❒

The response of the failsafe digital output depends on the test stop mode that has been selected.

Output signal and setting the test mode (Page 142)

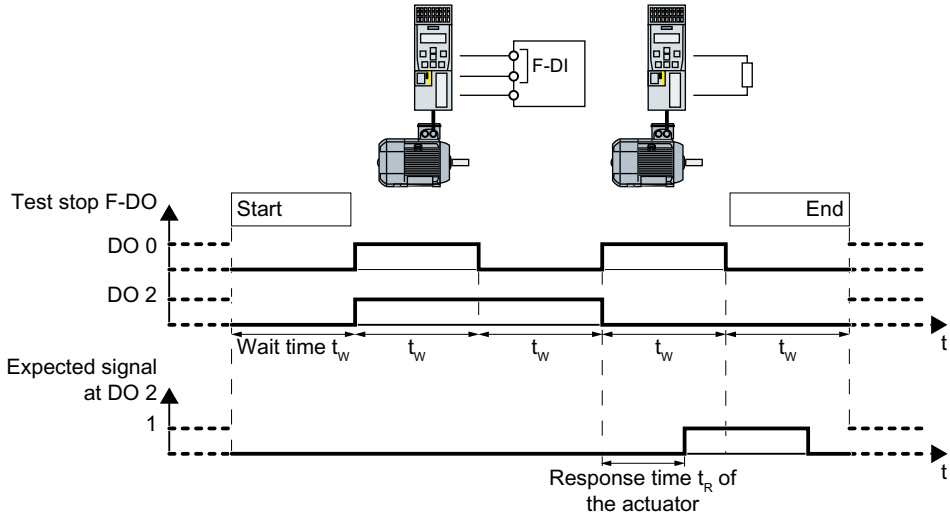


Figure 6-5 Test stop mode 1

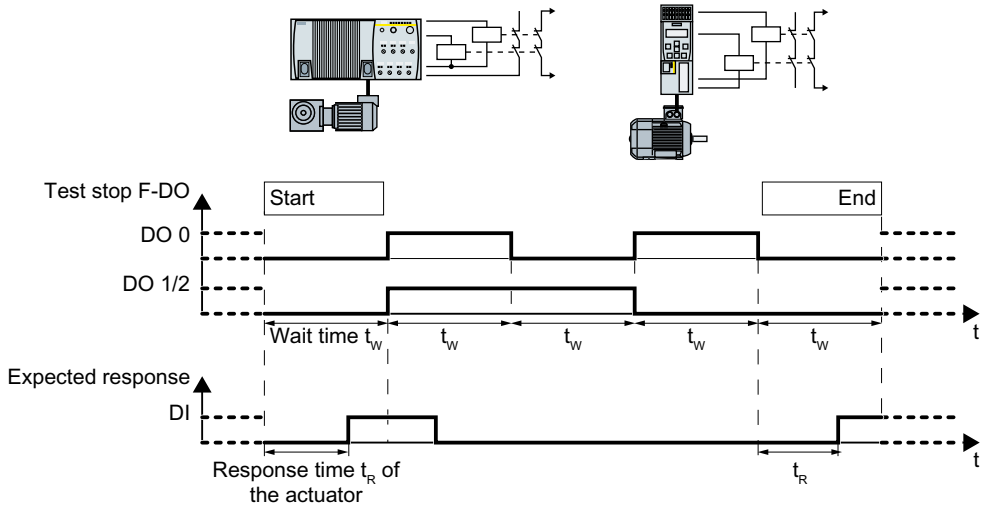


Figure 6-6 Test stop mode 2

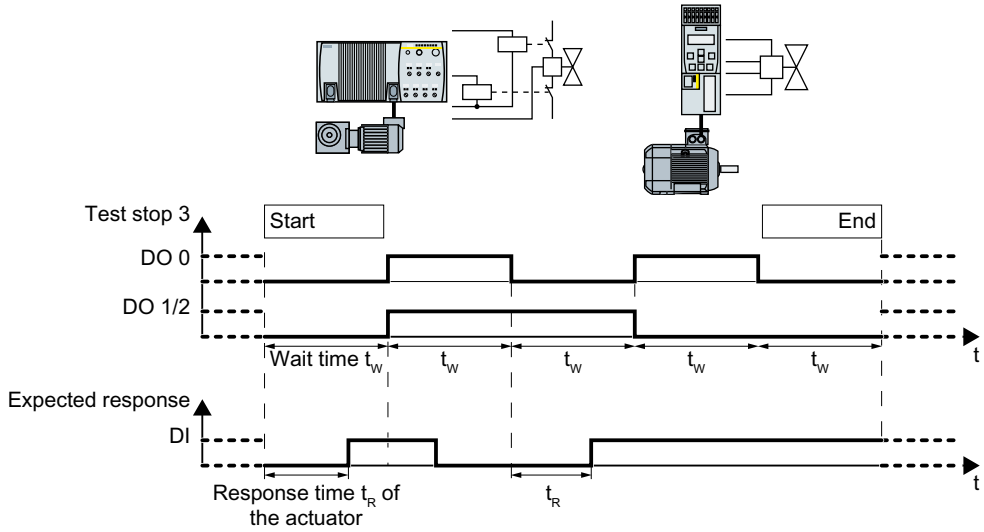


Figure 6-7 Test stop mode 3

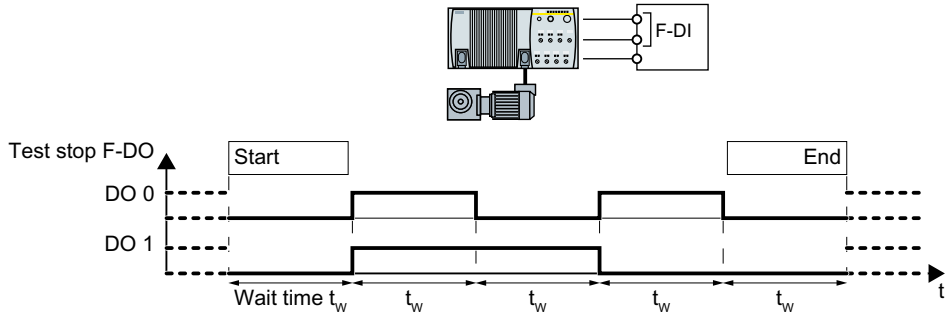


Figure 6-8 Test stop mode 4

# 6.3 Safe Torque Off (STO)

## 6.3.1 Overview

### What can you find in this Chapter?

The relevant operating cases for the STO function are described in this chapter.

Table 6-1 Operating cases for the STO function when the motor is switched on (ON/OFF1 = 1)

| | |
|---|---|
| Selecting and de-selecting STO | Selecting and deselecting STO when the motor is switched on (Page 186) |
| Discrepancy in the input signal | The fail-safe digital input to select STO identifies an error.<br>Response to a discrepancy when STO is active (Page 188) |

Table 6-2 Switching the motor on and off when STO is active or not active

| | Switching on the motor (ON/OFF1 = 0 → 1) | Switching off the motor (ON/OFF1, OFF2 or OFF3 = 1 → 0) |
|---|---|---|
| STO is not active | If STO is not active, then there are no restrictions for switching on and switching off the motor. | |
| STO is active | The active STO function prevents the motor from being switched on. | The motor is always switched off when STO is active. The OFF1, OFF2 and OFF3 signals have no effect. |

## 6.3.2 Selecting and deselecting STO when the motor is switched on

### Select STO

#### Function

1. The machine control selects the STO safety function via a failsafe digital input or via PROFIsafe.
2. The inverter then safely switches off the motor torque.

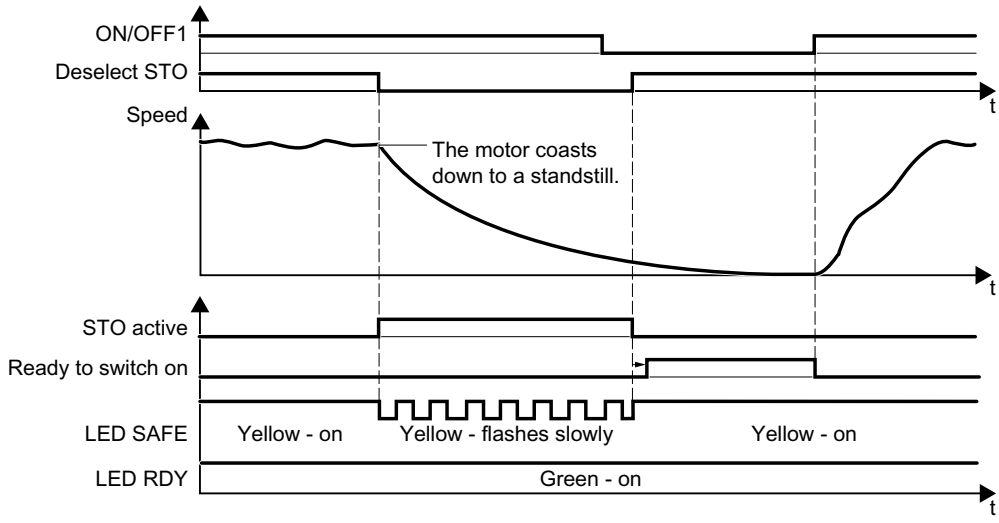


Figure 6-9 Time response of the STO safety function (Safe Torque Off)

| Inverter signal | Parameter | Included in the PROFIsafe telegram | Can be interconnected with | |
|---|---|---|---|---|
| | | | F-DI | F-DO |
| STO active (Basic Functions) | r9773.1 | ✓ | --- | ✓ |
| Deselect STO (Basic Functions) | r9773.0 | ✓ | ✓ | --- |
| STO active (Extended Functions) | r9722.0 | ✓ | --- | ✓ |
| Deselect STO (Extended Functions) | r9720.0 | ✓ | ✓ | --- |
| Ready for switching on | r0052.0 | --- | --- | --- |
| ON/OFF1 | r0054.0 | --- | --- | --- |

### Switching on the motor once STO is active

#### Procedure

1. Deselect STO.
2. After deselecting STO, wait until the inverter is "ready to switch on".
   Alternatively: After deselecting STO, wait a certain time before switching on. We recommend a wait time of 200 ms.
3. Switch on the motor: ON/OFF1 = 1.

You have re-activated the motor following an active STO.
❐

### 6.3.3 Response to a discrepancy when STO is active

The inverter responds with the active safety function STO to a discrepancy at the failsafe digital input.

The inverter response depends on the wiring and the setting of the inverter:

- You are using the Basic Functions according to SIL 2 → case 1.
- You are using the Extended Functions → case 2.
- You are using the "STO via Power Module terminals" function → Case 3.

#### Case 1: Response of the drive for STO of the Basic Functions

You have selected one of the following settings:

- Basic Functions via onboard terminals
- Basic Functions via PROFIsafe and onboard terminals
- Extended Functions via PROFIsafe and Basic Functions via onboard terminals

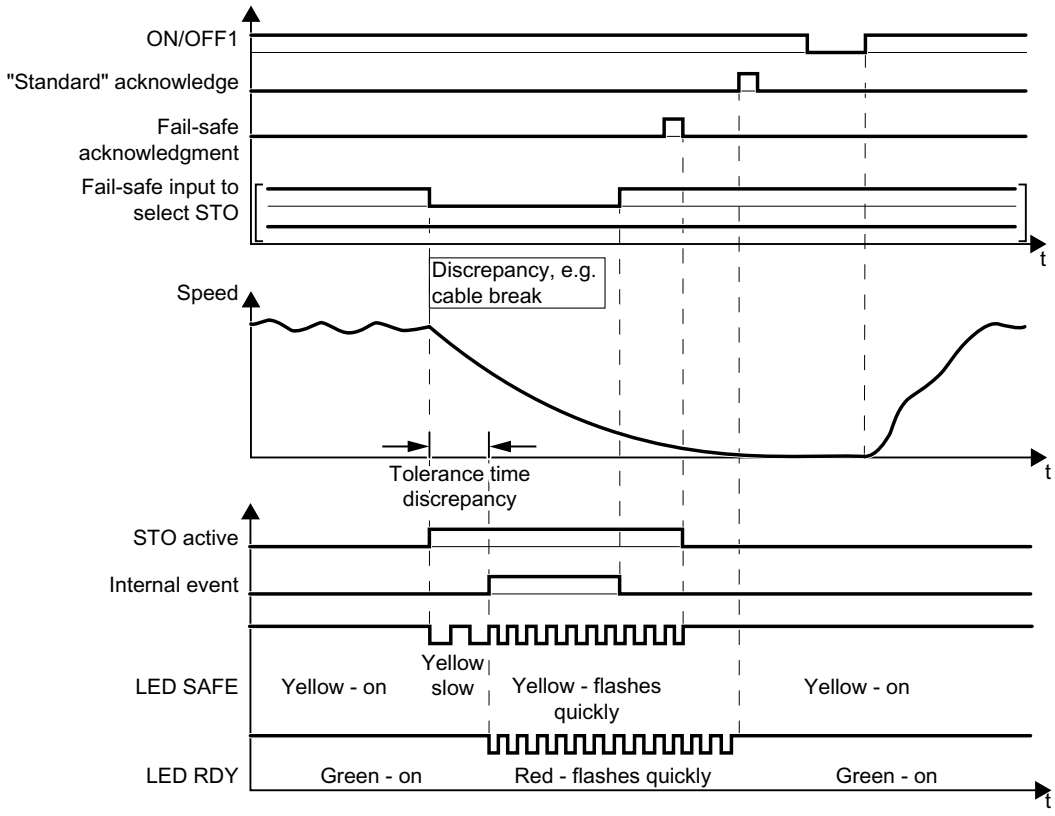


Figure 6-10 Inverter response for discrepancy of the input signal for STO (example: cable break in the channel of processor P1)

Inverter messages after the tolerance time has expired:

- Discrepancy (fault F01611 or F30611 with fault values r0949 = 2000 or 2002)
- The inverter sets the error bit of the safety functions (= internal event).

Independent of the voltage levels available, the inverter sets the evaluation of the discrepant failsafe digital input into the safe state (= zero) until you acknowledge the inverter using a failsafe signal or you switch off the power supply voltage and switch it on again.

| Inverter signal | Parameter | Included in the PROFIsafe telegram | Can be interconnected with | |
|---|---|---|---|---|
| | | | F-DI | F-DO |
| Internal event | r9722.7 | ✓ | --- | ✓ |
| STO active (Basic Functions) | r9773.1 | ✓ | --- | ✓ |
| Deselect STO (Basic Functions) | r9773.0 | ✓ | ✓ | --- |
| "Standard" acknowledgment | p2103 | --- | --- | --- |
| Failsafe acknowledgment | r9720.7 | ✓ | ✓ | --- |
| ON/OFF1 | r0054.0 | --- | --- | --- |

## Case 1: Switching on the motor after a discrepancy

### Procedure

1. Remove the discrepancy.
2. Acknowledge the internal event.

| Selected setting | How can the internal event be acknowledged? | | |
|---|---|---|---|
| | F-DI | PROFIsafe | Alternative |
| Basic Functions via onboard terminals | Select and deselect STO (F-DI = 1 → 0 → 1) | --- | Switch off the power supply voltage and switch on again |
| Basic Functions via PROFIsafe and onboard terminals | Select and deselect STO (F-DI = 1 → 0 → 1) | Select and deselect STO (PROFIsafe control word 1, bit 0 = 1 → 0 → 1)<br>or<br>Select and deselect SS1 (PROFIsafe control word 1, bit 1 = 1 → 0 → 1)<br>or<br>Failsafe acknowledgment (PROFIsafe control word 1, bit 7 = 0 → 1 → 0) | Switch off the power supply voltage and switch on again |
| Extended Functions via PROFIsafe and Basic Functions via onboard terminals | Select and deselect STO (F-DI = 1 → 0 → 1) | Select and deselect STO (PROFIsafe control word 1, bit 0 = 1 → 0 → 1)<br>or<br>Select and deselect SS1 (PROFIsafe control word 1, bit 1 = 1 → 0 → 1)<br>or<br>Failsafe acknowledgment (PROFIsafe control word 1, bit 7 = 0 → 1 → 0) | Switch off the power supply voltage and switch on again |

3. Acknowledge the inverter with the "standard" acknowledge signal.
4. Issue an OFF1 command (ON/OFF1 = 0).
5. Switch on the motor (ON/OFF1 = 1).

You have acknowledged the discrepancy message, and switched on the motor again.
❐

## Case 2: Response of the drive for STO of the Extended Functions

You have selected the Extended Functions via onboard terminals.

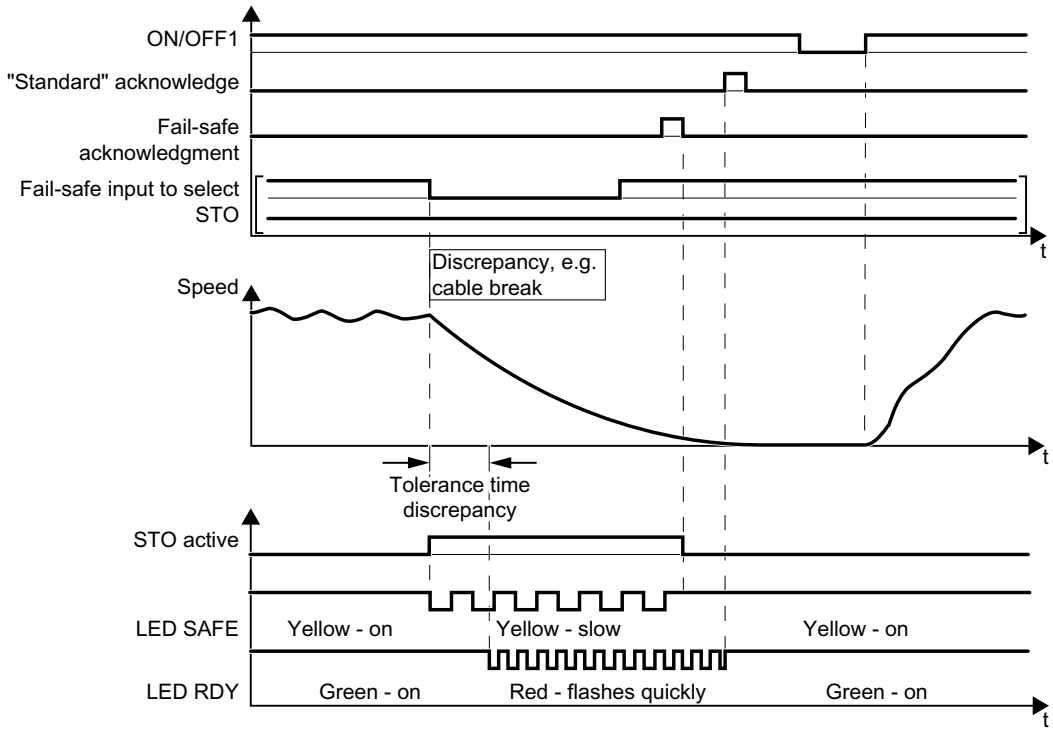


Figure 6-11 Response of safety function STO in the event of a discrepancy

The inverter does not set the error bit of the safety functions (= internal event).

After the tolerance time has expired, the inverter signals the discrepancy (fault C01770 or C30770).

| Inverter signal | Parameter | Included in the PROFIsafe telegram | Can be interconnected with | |
|---|---|---|---|---|
| | | | F-DI | F-DO |
| Internal event | r9722.7 | ✓ | --- | ✓ |
| STO active (Extended Functions) | r9722.0 | ✓ | --- | ✓ |
| Deselect STO (Extended Functions) | r9720.0 | ✓ | ✓ | --- |
| "Standard" acknowledgment | p2103 | --- | --- | --- |
| Failsafe acknowledgment | r9720.7 | ✓ | ✓ | --- |
| ON/OFF1 | r0054.0 | --- | --- | --- |

## Case 2: Switching on the motor after a discrepancy

### Procedure

1. Remove the discrepancy.
2. Acknowledge the discrepancy message with a failsafe acknowledge signal via a failsafe digital input: F-DI = 0 → 1 → 0.
   Alternatively: Switch off the power supply voltage and switch on again.
3. Acknowledge the inverter with the "standard" acknowledge signal.
4. Issue an OFF1 command (ON/OFF1 = 0).
5. Switch on the motor (ON/OFF1 = 1).

You have acknowledged the discrepancy message, and switched on the motor again.
❒

## Example 3: Drive response for the "STO via Power Module terminals" function

You have selected the "STO via Power Module terminals" function for the PM240-2 or PM240P-2 Power Module.

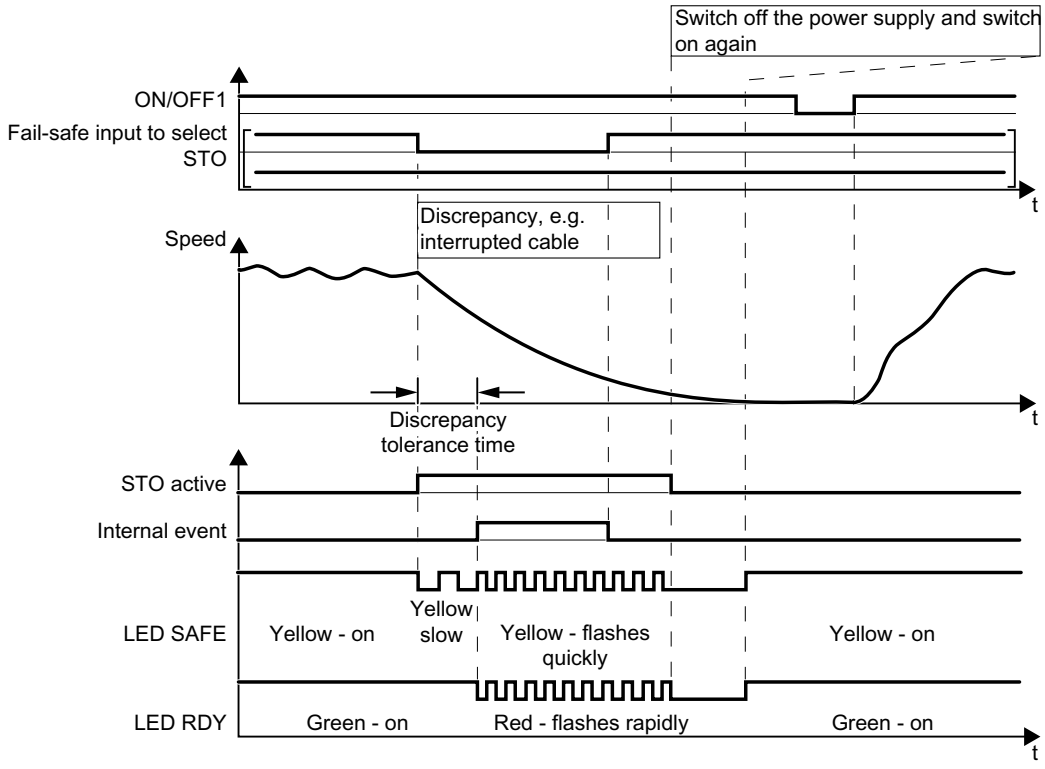


Figure 6-12 Response of safety function STO in the event of a discrepancy at the input of the PM240-2 or PM240P-2 Power Module

Inverter messages after the tolerance time has expired:

- Discrepancy (fault F01600 or F30600 with fault value r0949 = 1030)
- The inverter sets the error bit of the safety functions (= internal event).

| Inverter signal | Parameter | Included in the PROFIsafe telegram | Can be interconnected with | |
|---|---|---|---|---|
| | | | F-DI | F-DO |
| Internal event | r9722.7 | ✓ | --- | ✓ |
| STO active (Basic Functions) | r9773.1 | ✓ | --- | ✓ |
| Deselect STO (Basic Functions) | r9773.0 | ✓ | ✓ | --- |
| STO cause – selection via Power Module terminals | r9772.25 | --- | --- | --- |
| "Standard" acknowledgment | p2103 | --- | --- | --- |
| Failsafe acknowledgment | r9720.7 | ✓ | ✓ | --- |
| ON/OFF1 | r0054.0 | --- | --- | --- |

## Example 3: Switching on the motor after a discrepancy

### Procedure

1. Remove the discrepancy.
2. Acknowledge the discrepancy message.

| Selected setting | How can the internal event be acknowledged? | | |
|---|---|---|---|
| | F-DI [1] | PROFIsafe | Alternative |
| Basic Functions via onboard terminals | Select and deselect STO (F-DI = 1 → 0 → 1) | --- | Switch off the power supply voltage and switch on again |
| Basic Functions via PROFIsafe and onboard terminals<br>or<br>Extended Functions via PROFIsafe and Basic Functions via onboard terminals | Select and deselect STO (F-DI = 1 → 0 → 1) | Select and deselect STO (PROFIsafe control word 1, bit 0 = 1 → 0 → 1)<br>or<br>Select and deselect SS1 (PROFIsafe control word 1, bit 1 = 1 → 0 → 1)<br>or<br>Failsafe acknowledgment (PROFIsafe control word 1, bit 7 = 0 → 1 → 0) | Switch off the power supply voltage and switch on again |

[1] The message cannot be acknowledged using the Power Module terminals.

3. Acknowledge the inverter with the "standard" acknowledge signal.
4. Issue an OFF1 command (ON/OFF1 = 0).
5. Enter a speed setpoint = 0 (motor is stationary) – and switch on the motor (ON/OFF1 = 1).
6. Select the "STO via Power Module terminals" function.
   The inverter carries out a forced checking procedure (test stop).
7. Deselect the "STO via Power Module terminals" function.
8. Check that neither fault F01600 nor F30600 with fault value r0949 = 1030 is active.

You have acknowledged the discrepancy message, and switched on the motor again.
❐

# 6.4 Safe Brake Control (SBC)

## 6.4.1 Selecting and deselecting SBC when the motor is switched on

If you have connected the motor holding brake to the inverter via the Safe Brake Relay, then the SBC function is active under the following conditions:

1. You have activated the "motor holding brake" function in the inverter.
2. You have enabled the SBC function.
3. The STO function is active in the inverter.

### Selecting STO when the motor is at a standstill

**Function**

1. The higher-level control switches the motor off: ON/OFF1 = 0 or OFF3 = 0.
2. When the drive has come to a standstill, the control selects the STO function.

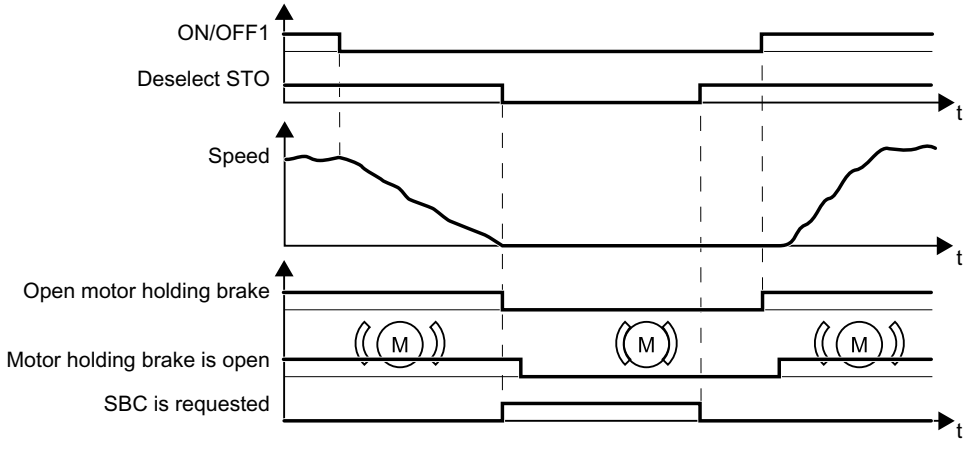


Figure 6-13 Wait until standstill is reached and activate SBC with STO

Before you can switch on the motor again, you must deselect the STO function.

| Inverter signal | Parameter | Included in the PROFI-safe telegram | Can be interconnected with | |
|---|---|---|---|---|
| | | | F-DI | F-DO |
| STO deselection (basic functions) | r9773.0 | ✓ | ✓ | --- |
| Deselect STO (extended functions) | r9720.0 | ✓ | ✓ | --- |
| SBC requested (basic functions) | r9773.4 | --- | --- | --- |
| ON/OFF1 | r0054.0 | --- | --- | --- |
| Release motor holding brake | r0899.12 | --- | --- | --- |
| Close motor holding brake | r0899.13 | --- | --- | --- |

## Selecting SS1 when the motor is rotating

### Function

1. The higher-level control selects the SS1 function
2. The inverter brakes the motor with the OFF3 ramp-down time.
3. The inverter closes the motor holding brake once the motor is at a standstill.
4. If the standstill monitoring is undershot, or once the delay time has expired, the inverter activates the STO function and controls the brake with the SBC function.

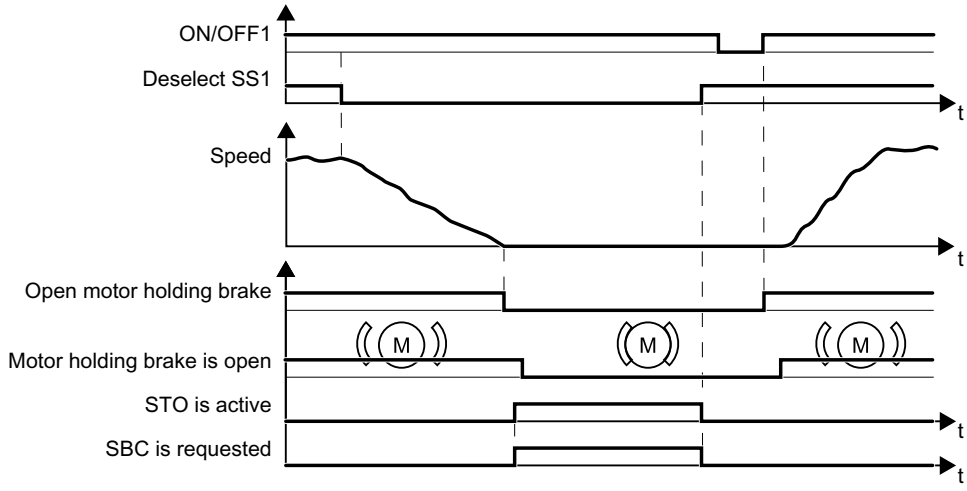


Figure 6-14 When selecting SS1, the motor holding brake closes at standstill

Before you can switch on the motor again, you must deselect the SS1 function.

| Inverter signal | Parameter | Included in the PROFI-safe telegram | Can be interconnected with | |
|---|---|---|---|---|
| | | | F-DI | F-DO |
| STO active (basic functions) | r9773.1 | ✓ | --- | ✓ |
| STO active (extended functions) | r9722.0 | ✓ | --- | ✓ |
| Deselect STO (extended functions) | r9720.0 | ✓ | ✓ | --- |
| SBC requested (basic functions) | r9773.4 | --- | --- | --- |
| Deselect SS1 (basic functions) | r9773.5 | ✓ | ✓ | --- |
| Deselect SS1 (extended functions) | r9720.1 | ✓ | ✓ | --- |
| ON/OFF1 | r0054.0 | --- | --- | --- |
| Release motor holding brake | r0899.12 | --- | --- | --- |
| Close motor holding brake | r0899.13 | --- | --- | --- |

## Selecting STO when the motor is rotating

### Function

1. The higher-level control selects the STO function.
2. The inverter closes the brake without taking the current speed into consideration.

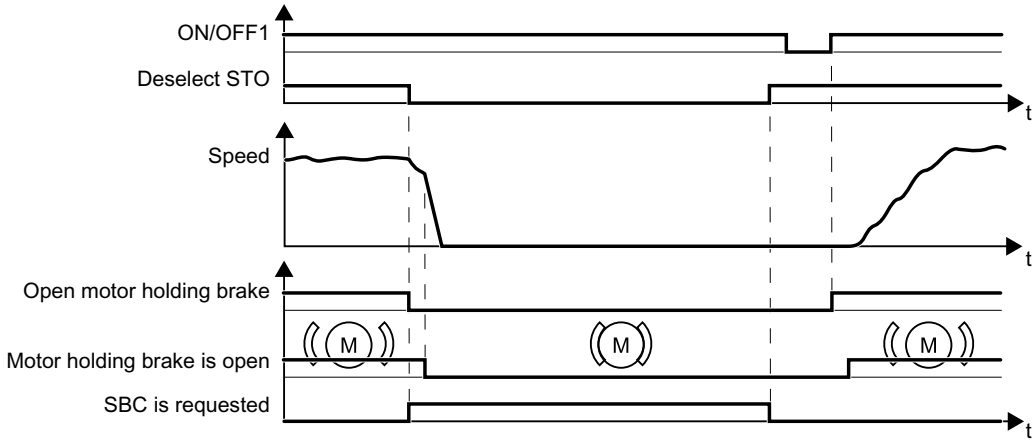


Figure 6-15 The motor holding brake closes after selecting STO

Before you can switch on the motor again, you must deselect the STO function.

| Inverter signal | Parameter | Included in the PROFI-safe telegram | Can be interconnected with | |
|---|---|---|---|---|
| | | | F-DI | F-DO |
| STO deselection (basic functions) | r9773.0 | ✓ | ✓ | --- |
| Deselect STO (extended functions) | r9720.0 | ✓ | ✓ | --- |
| SBC requested (basic functions) | r9773.4 | --- | --- | --- |
| ON/OFF1 | r0054.0 | --- | --- | --- |
| Release motor holding brake | r0899.12 | --- | --- | --- |
| Close motor holding brake | r0899.13 | --- | --- | --- |

## 6.4.2 Response to faults in the brake control

### Faults in the brake control

When opening or closing the brake, the inverter identifies faults in the brake cable and in the brake winding.

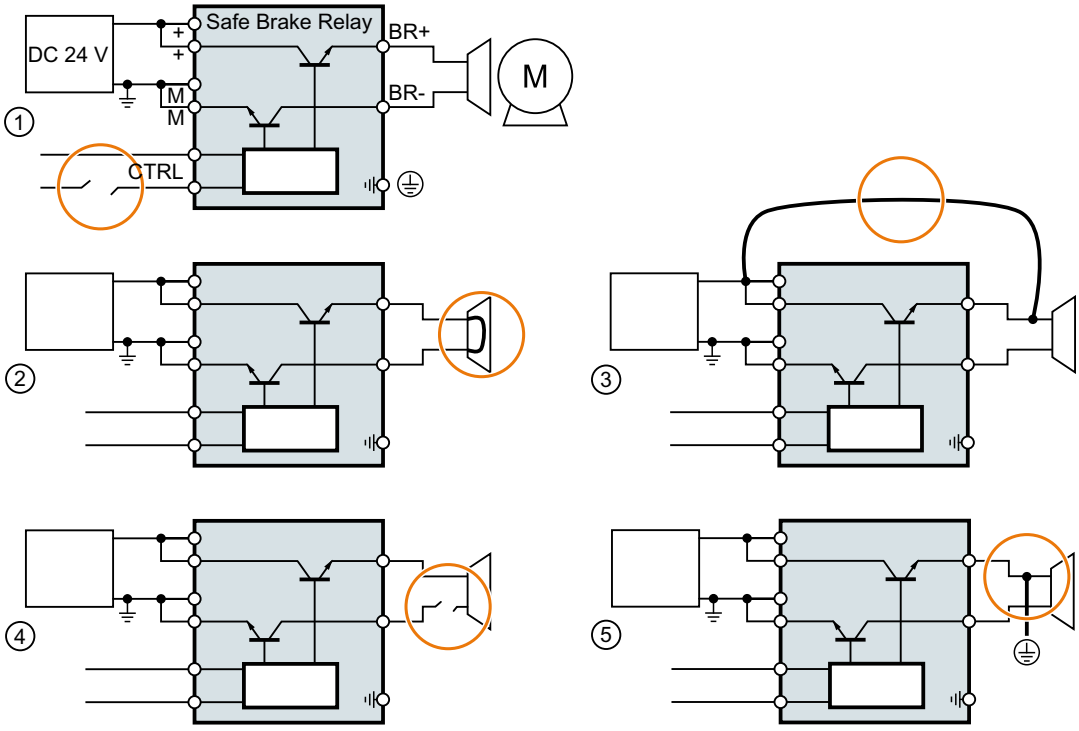


① Control cable from the inverter to the Safe Brake Relay is interrupted
② Short-circuit in the brake winding
③ Cross circuit between the brake cable and the 24 V supply voltage
④ Brake cable is interrupted
⑤ Ground fault on the brake cable

Figure 6-16 Examples of faults in the brake control

### Drive response

If the inverter detects a fault in the brake control, it responds with a STOP A (message F01630 or F30630) and closes the brake.

# 6.5 Safe Stop 1 (SS1)

## 6.5.1 Overview

### What can you find in this Chapter?

The relevant operating cases for the SS1 function are described in this chapter.

Table 6-3 Response of the SS1 function when the motor is switched on (ON/OFF1 = 1)

| | |
|---|---|
| Select and deselect SS1 | Selecting and deselecting SS1 when the motor is switched on (Page 199) |
| Discrepancy in the input signal | The fail-safe digital input to select SS1 identifies an error.<br>Response to a discrepancy when SS1 is active (Page 207) |
| Limit value violation | The speed of the motor violates the SS1 monitoring that has been set.<br>Limit value violation when SS1 is active (Page 212)<br>The basic SS1 function does not monitor the motor speed. The limit value violation is not relevant in this particular case. |

Table 6-4 Switching the motor on and off when SS1 is active or not active

| | Switching on the motor (ON/OFF1 = 0 → 1) | Switching off the motor (ON/OFF1, OFF2 or OFF3 = 1 → 0) |
|---|---|---|
| SS1 is not active | If SS1 is not active, then there are no restrictions for switching on and switching off the motor. | |
| SS1 is active | The active SS1 function prevents the motor from being switched on. | The drive response depends on the signal that you use to switch off the motor.<br>Switching off the motor when SS1 is active (Page 205) |

## 6.5.2 Selecting and deselecting SS1 when the motor is switched on

### 6.5.2.1 SS1 basic function

#### Select SS1

**Function**

1. The higher-level control selects the SS1 function via a failsafe digital input or via PROFIsafe safe communication.
2. If the motor is switched on when SS1 is selected, the inverter brakes the motor with the OFF3 ramp-down time.
3. After the delay time, the inverter safely switches off the motor torque with the STO safety function.

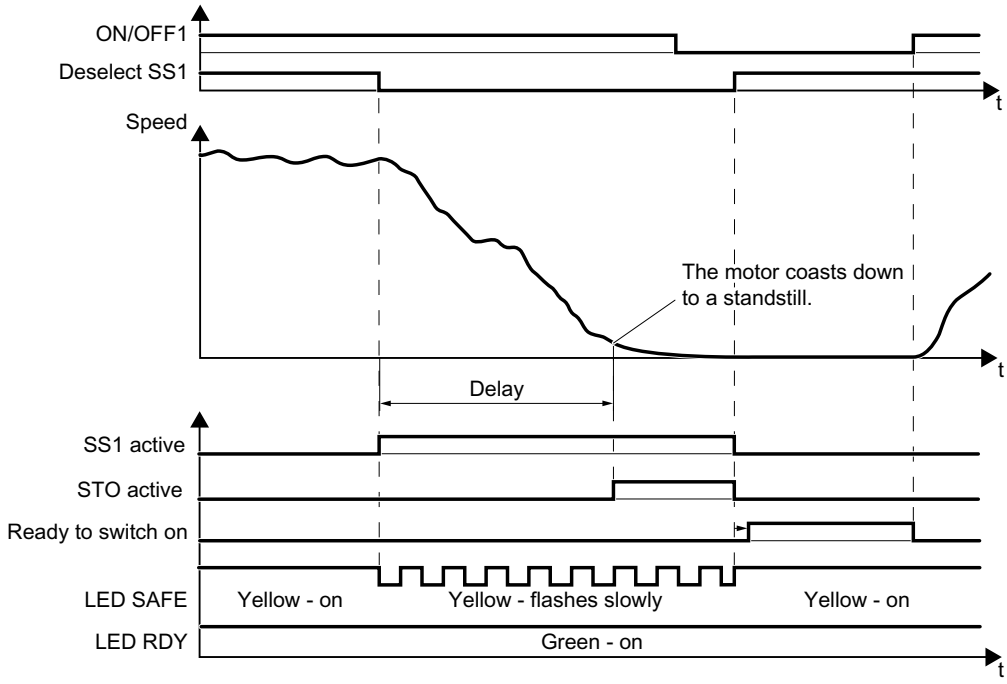


Figure 6-17 Braking behavior and diagnostics of the safety function SS1 (Safe Stop 1)

| Inverter signal | Parameter | Included in the PROFIsafe telegram | Can be interconnected with | |
|---|---|---|---|---|
| | | | F-DI | F-DO |
| STO active (Basic Functions) | r9773.1 | ✓ | --- | ✓ |
| SS1 active (Basic Functions) | r9773.6 | ✓ | --- | ✓ |
| Deselect SS1 (Basic Functions) | r9773.5 | ✓ | ✓ | --- |
| Ready for switching on | r0052.0 | --- | --- | --- |
| ON/OFF1 | r0054.0 | --- | --- | --- |

## Switching on the motor once SS1 is active

### Procedure

1. Deselect SS1.
2. After deselecting SS1, wait until the inverter is "ready to switch on".
   Alternatively: After deselecting SS1, wait a certain time before switching on. We recommend a wait time of 200 ms.
3. Switch on the motor: ON/OFF1 = 1.

You have activated the motor following an active SS1.
❐

### 6.5.2.2 Extended function SS1 with acceleration monitoring

## Select SS1

#### Function

1. The higher-level control selects the SS1 safety function via a failsafe digital input or via PROFIsafe safe communication.
2. If the motor has already been switched off when selecting SS1, then the inverter safely switches off the motor torque with the safety function STO.
   If the motor is switched on when SS1 is selected, the inverter brakes the motor with the OFF3 ramp-down time. The inverter monitors whether the load speed decreases using the SBR function.
3. The inverter safely switches off the motor torque using the STO safety function if the load speed reaches the "standstill monitoring".

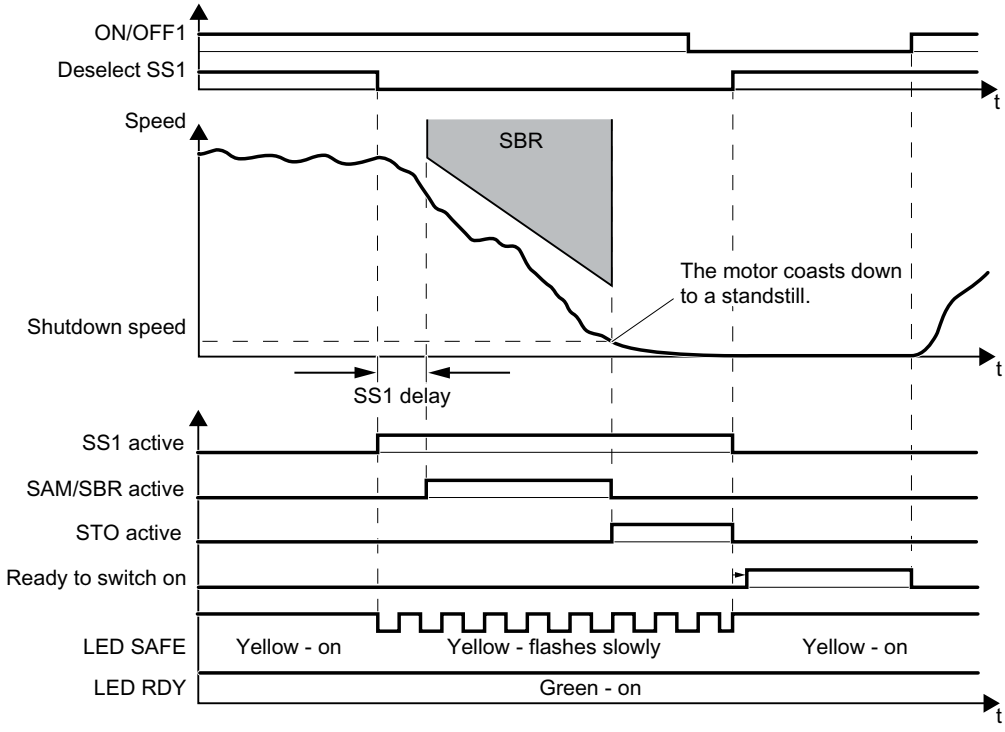


Figure 6-18 Braking behavior and diagnostics of the safety function SS1 (Safe Stop 1)

| Inverter signal | Parameter | Included in the PROFIsafe telegram | Can be interconnected with | |
|---|---|---|---|---|
| | | | F-DI | F-DO |
| STO active (Extended Functions) | r9722.0 | ✓ | --- | ✓ |
| SS1 active (Extended Functions) | r9722.1 | ✓ | --- | ✓ |
| Deselect SS1 (Extended Functions) | r9720.1 | ✓ | ✓ | --- |
| SAM/SBR active | r9723.16 | --- | --- | --- |

| Inverter signal | Parameter | Included in the PROFIsafe telegram | Can be interconnected with | |
|---|---|---|---|---|
| | | | F-DI | F-DO |
| Ready for switching on | r0052.0 | --- | --- | --- |
| ON/OFF1 | r0054.0 | --- | --- | --- |

## Switching on the motor once SS1 is active

### Procedure

1. Deselect SS1.
2. After deselecting SS1, wait until the inverter is "ready to switch on".
   Alternatively: After deselecting SS1, wait a certain time before switching on. We recommend a wait time of 200 ms.
3. Switch on the motor: ON/OFF1 = 1.

You have activated the motor following an active SS1.
❐

### 6.5.2.3 Extended function SS1 with acceleration monitoring

## Select SS1

**Function**

1. The higher-level control selects the SS1 safety function via a failsafe digital input or via PROFIsafe safe communication.
2. If the motor has already been switched off when selecting SS1, then the inverter safely switches off the motor torque with the safety function STO.
   If the motor is switched on when SS1 is selected, the inverter brakes the motor with the OFF3 ramp-down time. The inverter monitors braking using the SAM function (Safe Acceleration Monitor).
3. The inverter safely switches off the motor torque with the STO safety function if one of the two conditions is fulfilled:
   – The actual speed reaches the value of the "standstill monitoring".
   – The delay time has expired.

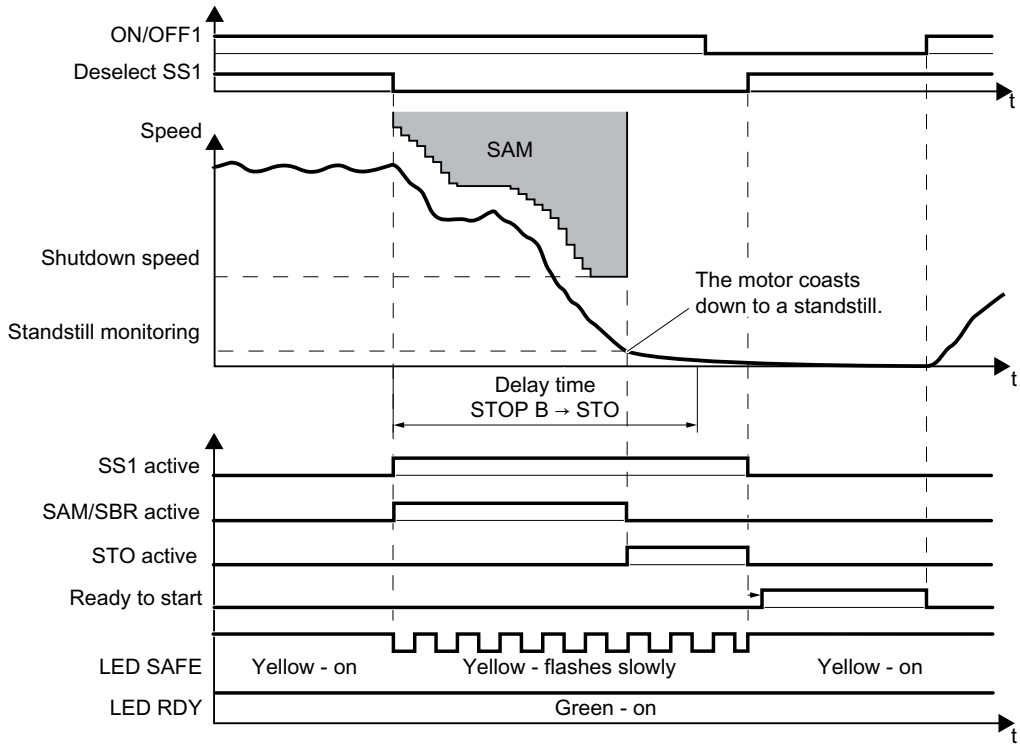


Figure 6-19 Braking behavior and diagnostics of the safety function SS1 (Safe Stop 1)

| Inverter signal | Parameter | Included in the PROFIsafe telegram | Can be interconnected with | |
|---|---|---|---|---|
| | | | F-DI | F-DO |
| STO active (Extended Functions) | r9722.0 | ✓ | --- | ✓ |
| SS1 active (Extended Functions) | r9722.1 | ✓ | --- | ✓ |

| Inverter signal | Parameter | Included in the PROFIsafe telegram | Can be interconnected with | |
|---|---|---|---|---|
| | | | F-DI | F-DO |
| Deselect SS1 (Extended Functions) | r9720.1 | ✓ | ✓ | --- |
| SAM/SBR active | r9723.16 | --- | --- | --- |
| Ready for switching on | r0052.0 | --- | --- | --- |
| ON/OFF1 | r0054.0 | --- | --- | --- |

## Switching on the motor once SS1 is active

### Procedure

1. Deselect SS1.
2. After deselecting SS1, wait until the inverter is "ready to switch on".
   Alternatively: After deselecting SS1, wait a certain time before switching on. We recommend a wait time of 200 ms.
3. Switch on the motor: ON/OFF1 = 1.

You have activated the motor following an active SS1.
❐

### 6.5.3 Switching off the motor when SS1 is active

#### Description

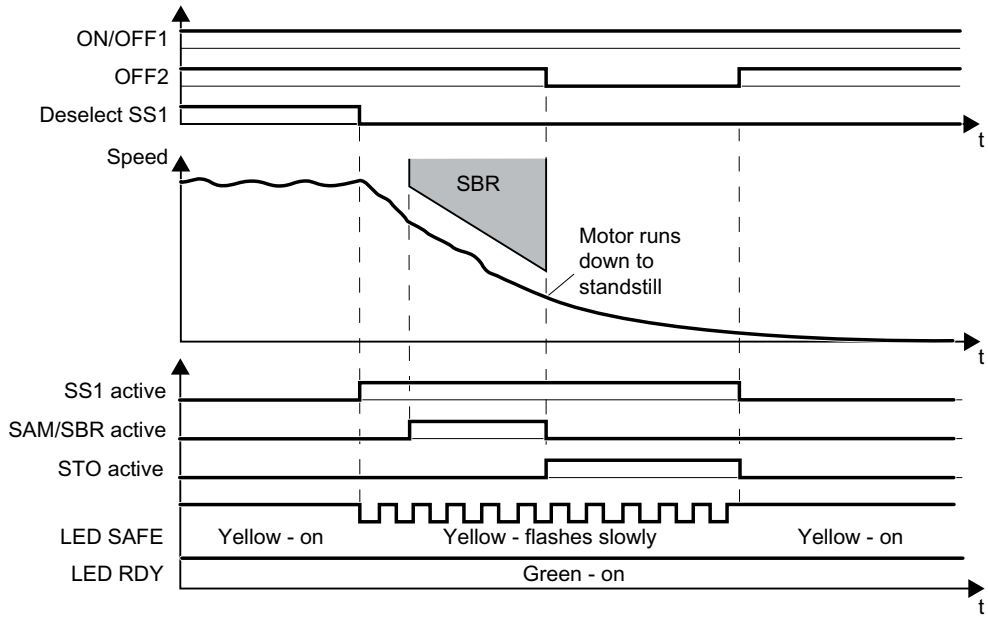


Figure 6-20 OFF2 command when the SS1 safety function is active (example: SS1 with braking ramp monitoring)

If you switch the motor off with the OFF1 or OFF3 command while the SS1 safety function is active, for example when limit switches are reached, this does not affect how the motor behaves. SS1 remains active and the inverter brakes the motor until the standstill detection threshold is reached.

If you switch off the motor with the safety SS1 function active using the OFF2 command, then the behavior of the drive is dependent on the setting of the SS1 safety function:

- SS1 without speed monitoring:
  The inverter switches off the motor torque. The motor then coasts to a standstill. After the delay time, STO is active.
- SS1 with speed monitoring:
  The inverter switches off the motor torque with the STO safety function. The motor then coasts to a standstill.

| Inverter signal | Parameters | Included in the PROFIsafe telegram | Can be interconnected with | |
|---|---|---|---|---|
| | | | F-DI | F-DO |
| STO active (extended functions) | r9722.0 | ✓ | --- | ✓ |
| Deselect SS1 (basic functions) | r9773.5 | ✓ | ✓ | --- |
| SS1 active (extended functions) | r9722.1 | ✓ | --- | ✓ |
| Deselect SS1 (extended functions) | r9720.1 | ✓ | ✓ | --- |
| SAM/SBR active | r9723.16 | --- | --- | --- |

| Inverter signal | Parameters | Included in the PROFIsafe telegram | Can be interconnected with | |
|---|---|---|---|---|
| | | | F-DI | F-DO |
| ON/OFF1 | r0054.0 | --- | --- | --- |
| OFF2 | r0054.1 | --- | --- | --- |

### 6.5.4 Response to a discrepancy when SS1 is active

The inverter responds with the active safety function SS1 to a discrepancy at the failsafe digital input.

The behavior of the drive depends on the setting of the inverter.

#### 1st case: Response of the drive for SS1 of the Basic Functions

You have selected one of the following settings:

- Basic Functions via onboard terminals
- Basic Functions via PROFIsafe and onboard terminals
- Extended Functions via PROFIsafe and Basic Functions via onboard terminals

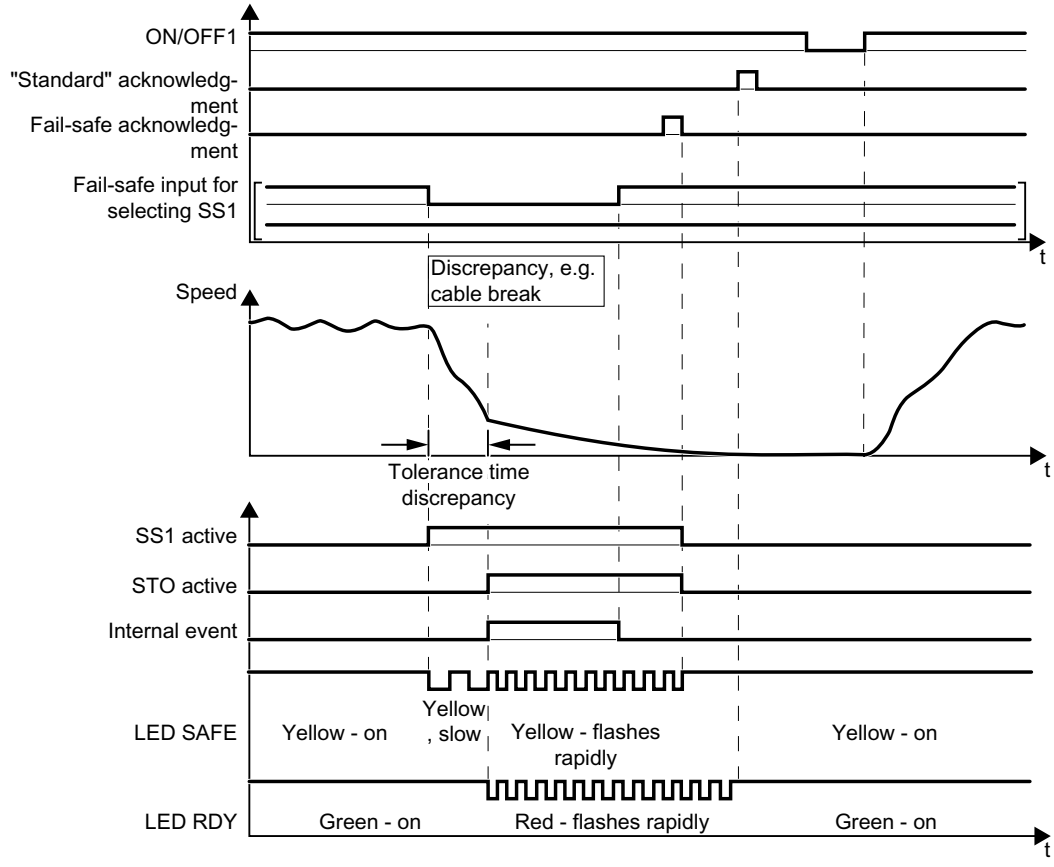


Figure 6-21 Inverter response for discrepancy of the input signal for SS1 (example: cable break in the channel of processor P1)

Inverter messages after the tolerance time has expired:

- Discrepancy (fault F01611 or F30611 with fault value r0949 = 2002)
- The inverter sets the error bit of the safety functions (= internal event).

Independent of the voltage levels available, the inverter sets the evaluation of the discrepant failsafe digital input into the safe state (= zero) until you acknowledge the inverter using a failsafe signal or you switch off the power supply voltage and switch it on again.

| Inverter signal | Parameter | Included in the PROFIsafe telegram | Can be interconnected with | |
|---|---|---|---|---|
| | | | F-DI | F-DO |
| Internal event | r9722.7 | ✓ | --- | ✓ |
| STO active (Basic Functions) | r9773.1 | ✓ | --- | ✓ |
| SS1 active (Basic Functions) | r9773.6 | ✓ | --- | ✓ |
| Deselect SS1 (Basic Functions) | r9773.5 | ✓ | ✓ | --- |
| "Standard" acknowledgment | p2103 | --- | --- | --- |
| Failsafe acknowledgment | r9720.7 | ✓ | ✓ | --- |
| ON/OFF1 | r0054.0 | --- | --- | --- |

## Switching on the motor after a discrepancy

### Procedure

1. Remove the discrepancy.
2. Acknowledge the internal event.

| Selected setting | How can the internal event be acknowledged? | | |
|---|---|---|---|
| | F-DI | PROFIsafe | Alternative |
| Basic Functions via on-board terminals | Select and deselect SS1 (F-DI = 1 → 0 → 1) | --- | Switch off the power supply voltage and switch on again |
| Basic Functions via PROFIsafe and on-board terminals | Select and deselect SS1 (F-DI = 1 → 0 → 1) | Select and deselect STO (PROFIsafe control word 1, bit 0 = 1 → 0 → 1)<br>or<br>Select and deselect SS1 (PROFIsafe control word 1, bit 1 = 1 → 0 → 1)<br>or<br>Failsafe acknowledgment (PROFIsafe control word 1, bit 7 = 0 → 1 → 0) | Switch off the power supply voltage and switch on again |
| Extended Functions via PROFIsafe and Basic Functions via on-board terminals | Select and deselect SS1 (F-DI = 1 → 0 → 1) | Select and deselect STO (PROFIsafe control word 1, bit 0 = 1 → 0 → 1)<br>or<br>Select and deselect SS1 (PROFIsafe control word 1, bit 1 = 1 → 0 → 1)<br>or<br>Failsafe acknowledgment (PROFIsafe control word 1, bit 7 = 0 → 1 → 0) | Switch off the power supply voltage and switch on again |

3. Acknowledge the inverter with the "standard" acknowledge signal.
4. Issue an OFF1 command (ON/OFF1 = 0).
5. Switch on the motor (ON/OFF1 = 1).

You have acknowledged the discrepancy message, and switched on the motor again.
❐

### 2nd case: Response of the drive for SS1 of the Extended Functions

You have selected the Extended Functions via onboard terminals.

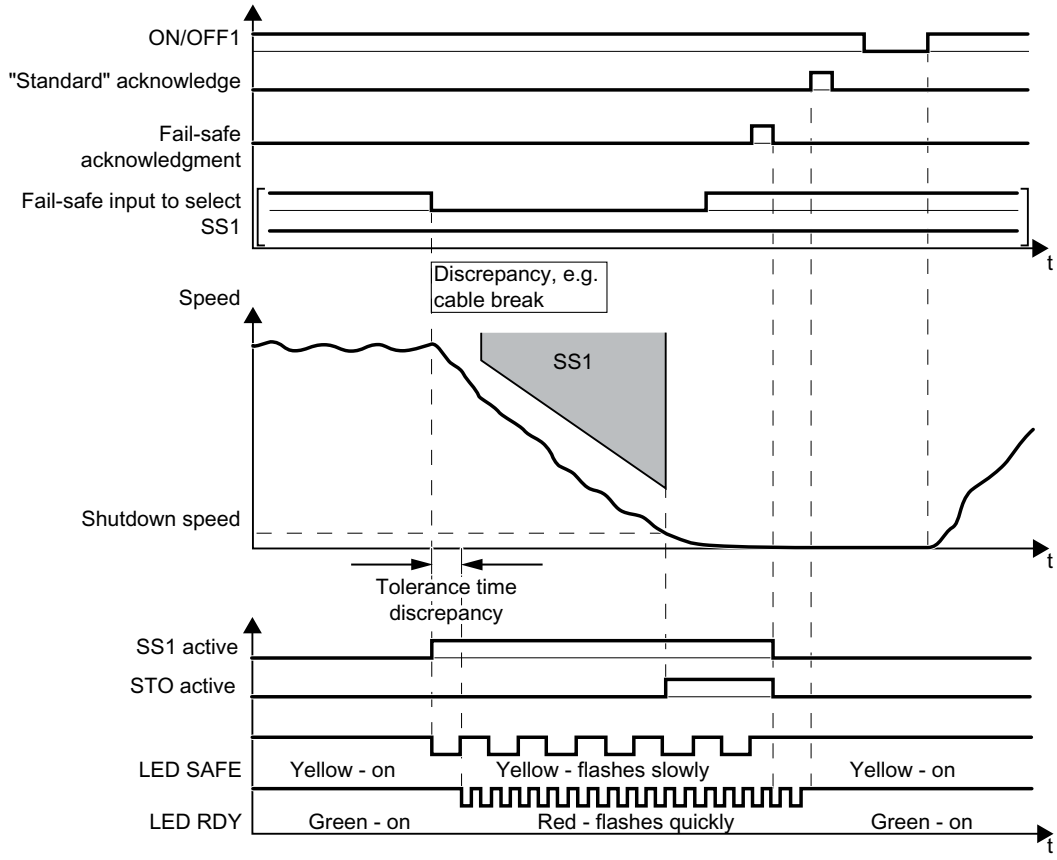


Figure 6-22 Inverter response for discrepancy of the input signal for SS1 (as example: SS1 with braking ramp monitoring)

The inverter does not set the error bit of the safety functions (= internal event).

After the tolerance time has expired, the inverter signals the discrepancy (message C01770 or C30770) but does not interrupt the braking operation for the motor.

| Inverter signal | Parameter | Included in the PROFIsafe telegram | Can be interconnected with | |
|---|---|---|---|---|
| | | | F-DI | F-DO |
| STO active (Extended Functions) | r9722.0 | ✓ | --- | ✓ |
| SS1 active (Extended Functions) | r9722.1 | ✓ | --- | ✓ |
| Deselect SS1 (Extended Functions) | r9720.1 | ✓ | ✓ | --- |
| SAM/SBR active | r9723.16 | --- | --- | --- |
| "Standard" acknowledgment | p2103 | --- | --- | --- |
| Failsafe acknowledgment | r9720.7 | ✓ | ✓ | --- |
| ON/OFF1 | r0054.0 | --- | --- | --- |

## Switching on the motor after a discrepancy

### Procedure

1. Remove the discrepancy.
2. Acknowledge the discrepancy message with the failsafe acknowledge signal via a failsafe digital input: F-DI = 0 → 1 → 0.
   Alternatively: Switch off the power supply voltage and switch on again.
3. Acknowledge the inverter with the "standard" acknowledge signal.
4. Issue an OFF1 command (ON/OFF1 = 0).
5. Switch on the motor (ON/OFF1 = 1).

You have acknowledged the discrepancy message, and switched on the motor again.
❐

### 6.5.5 Limit value violation when SS1 is active

#### Drive response

If motion monitoring detects a fault when SS1 is active, the inverter safely switches off the motor torque (STOP A).

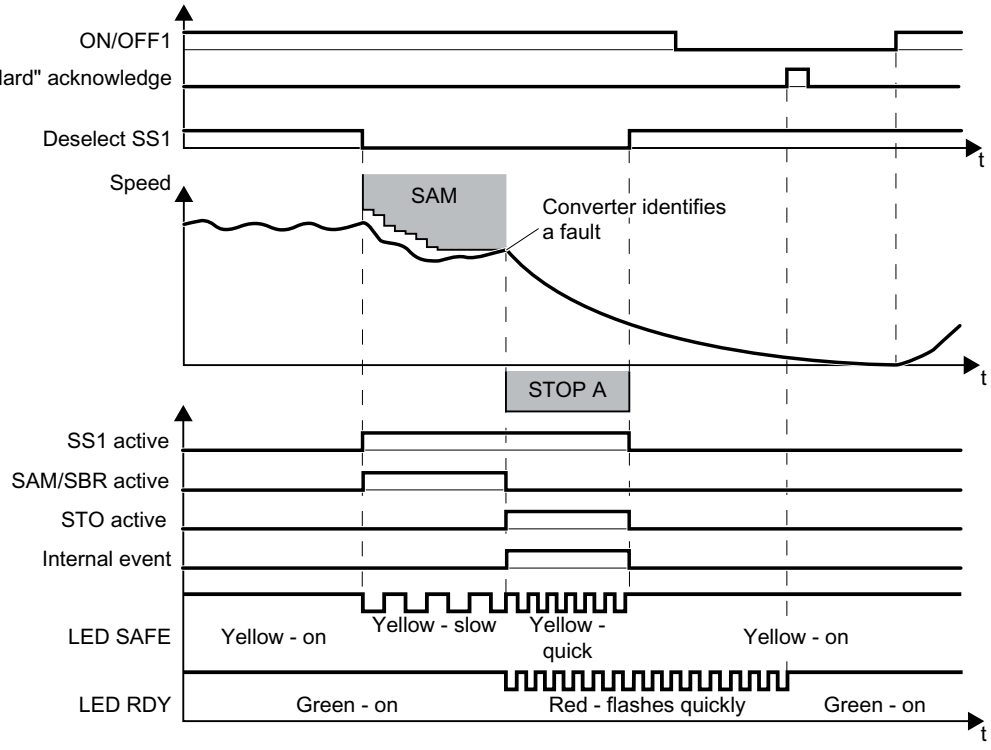


Figure 6-23 General fault response of safety function SS1 (as an example: SS1 with acceleration monitoring)

| Inverter signal | Parameter | Included in the PROFIsafe telegram | Can be interconnected with | |
|---|---|---|---|---|
| | | | F-DI | F-DO |
| Internal event | r9722.7 | ✓ | --- | ✓ |
| STO active (Extended Functions) | r9722.0 | ✓ | --- | ✓ |
| SS1 active (Extended Functions) | r9722.1 | ✓ | --- | ✓ |
| Deselect SS1 (Extended Functions) | r9720.1 | ✓ | ✓ | --- |
| SAM/SBR active | r9723.16 | --- | --- | --- |
| "Standard" acknowledgment | p2103 | --- | --- | --- |
| ON/OFF1 | r0054.0 | --- | --- | --- |

## Switching the motor on after an internal event

### Procedure

1. Deselect function SS1.
2. Issue an OFF1 command (ON/OFF1 = 0).
3. Acknowledge the inverter with the "standard" acknowledge signal.
4. Switch on the motor again (ON/OFF1 = 1).

You have acknowledged the internal event and switched on the motor again.
❐

# 6.6 Safely Limited Speed (SLS)

## 6.6.1 Overview

### What can you find in this Chapter?

The relevant operating cases for the SLS function are described in this chapter.

Table 6-5 Response of the SLS function when the motor is switched on (ON/OFF1 = 1)

| | |
|---|---|
| Selecting and deselecting SLS | Selecting and deselecting SLS when the motor is switched on (Page 214) |
| Switching over SLS levels when SLS is active | Switching over from a higher SLS level to a lower SLS level (and vice versa).<br>Switching over SLS levels (Page 221) |
| Discrepancy in the input signal | The fail-safe digital input to select SS1 identifies an error.<br>Response to a discrepancy when SLS is active (Page 229) |
| Limit value violation | The speed of the motor exceeds the set SLS limit value.<br>Limit value violation when SLS is active (Page 231) |

Table 6-6 Switching the motor on and off when SLS is active or not active

| | Switching on the motor (ON/OFF1 = 0 → 1) | Switching off the motor (ON/OFF1, OFF2 or OFF3 = 1 → 0) |
|---|---|---|
| SLS is not active | If SLS is not active, then there are no restrictions for switching on and switching off the motor. | |
| SLS is active | If your application requires that SLS always remains active, then you must take into account several special issues when switching on the motor.<br>Switching on the motor when SLS is active (Page 227) | The drive response depends on the signal that you use to switch off the motor.<br>Switching off the motor when SLS is active (Page 225) |

## 6.6.2 Selecting and deselecting SLS when the motor is switched on

#### Selecting SLS when the motor is switched on

As soon as the inverter detects the selection of SLS via a fail-safe digital input or via the PROFIsafe safe communication, the following happens:

- The inverter limits the speed to a value below the SLS monitoring and brakes the motor with the OFF3 ramp-down time.
- You can select whether the inverter monitors motor braking using the SMR (Safe Brake Ramp) function.

| With braking ramp monitoring | Without braking ramp monitoring |
|---|---|
| 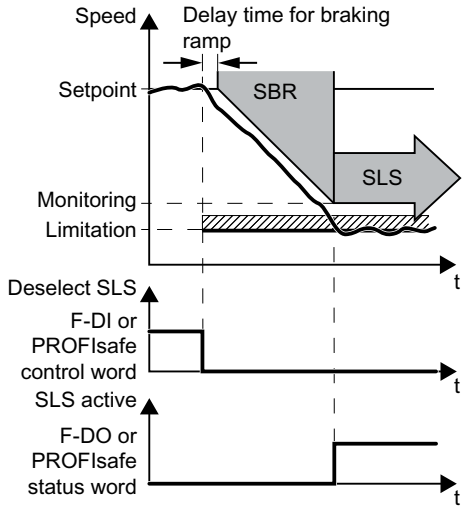 | 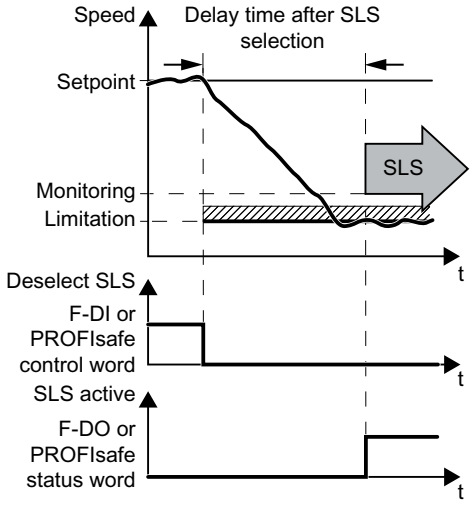 |
| After the adjustable "Delay time for braking ramp" has elapsed, the inverter uses the SBR (Safe Brake Ramp) function to determine whether the speed has decreased.<br>The inverter switches from SBR to SLS as soon as one of the following two conditions is fulfilled:<br>• The SBR monitoring ramp has reached the value of the speed monitoring.<br>This case is shown in the diagram above.<br>• The actual load speed reaches the value of the speed monitoring and the "delay time for braking ramp" has expired.<br>Advantage:<br>• Already during braking, the inverter detects as to whether the load speed decreases too slowly. | The inverter monitors the load speed after an adjustable delay time has expired.<br>Advantage:<br>• Instead of the SBR subfunction, you must only set the delay time. |

### Selecting SLS at low motor speeds

If the motor speed when selecting SLS is less than the SLS limit, then the drive responds as follows:

| With braking ramp monitoring | Without braking ramp monitoring |
|---|---|
| 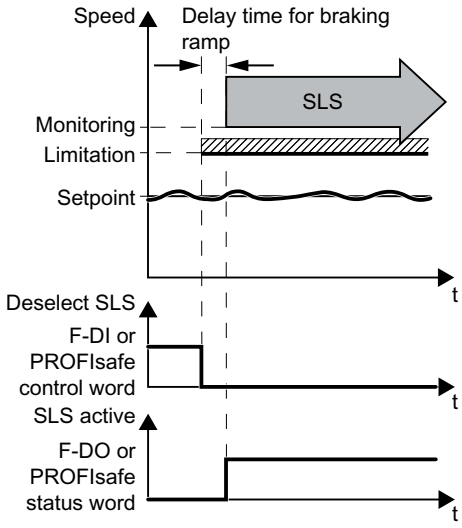  | 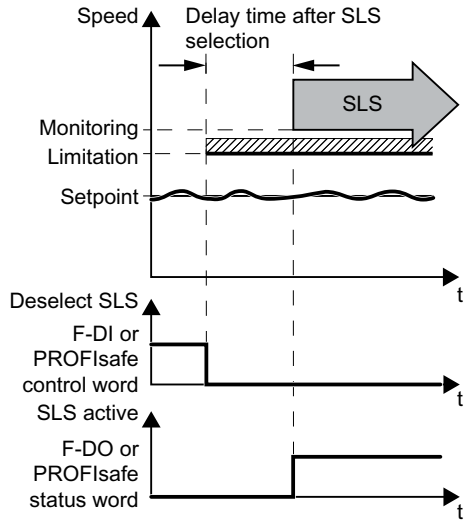  |
| The inverter monitors the speed after the "delay time for the braking ramp". | The inverter monitors the load speed after an adjustable delay time has expired. |

### Deselect SLS

If the higher-level controller deselects SLS, then the inverter deactivates limiting and monitoring.

#### 6.6.2.1 SLS with braking ramp monitoring

If the machine control selects the SLS safety function via a fail-safe digital input or via PROFIsafe communication, then the motor behaves differently depending on the absolute value of the load speed. These two scenarios are described below.

### Scenario 1: The absolute value of the load speed is less than the setpoint speed limit.

**Function**

1. The motor continues to follow the speed setpoint.
2. The inverter monitors the speed after the delay time has expired.

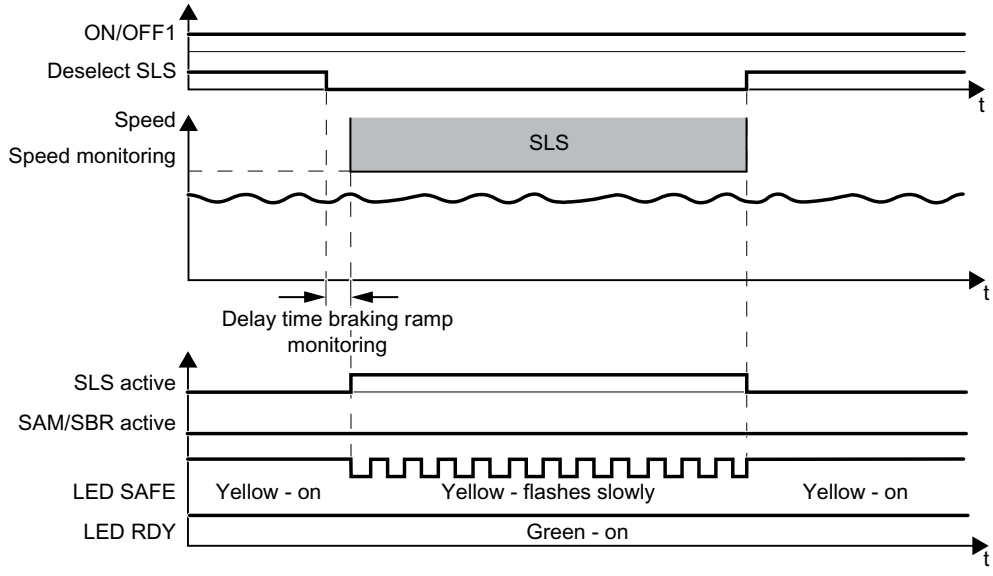


Figure 6-24 Selecting and deselecting the SLS safety function at low speeds

### Scenario 2: The absolute value of the load speed is higher than the setpoint speed limit.

**Function**

1. The inverter brakes the motor.
2. The inverter monitors the speed after the delay time has expired.
3. If you deselect SLS, then the motor accelerates again up to the speed setpoint.

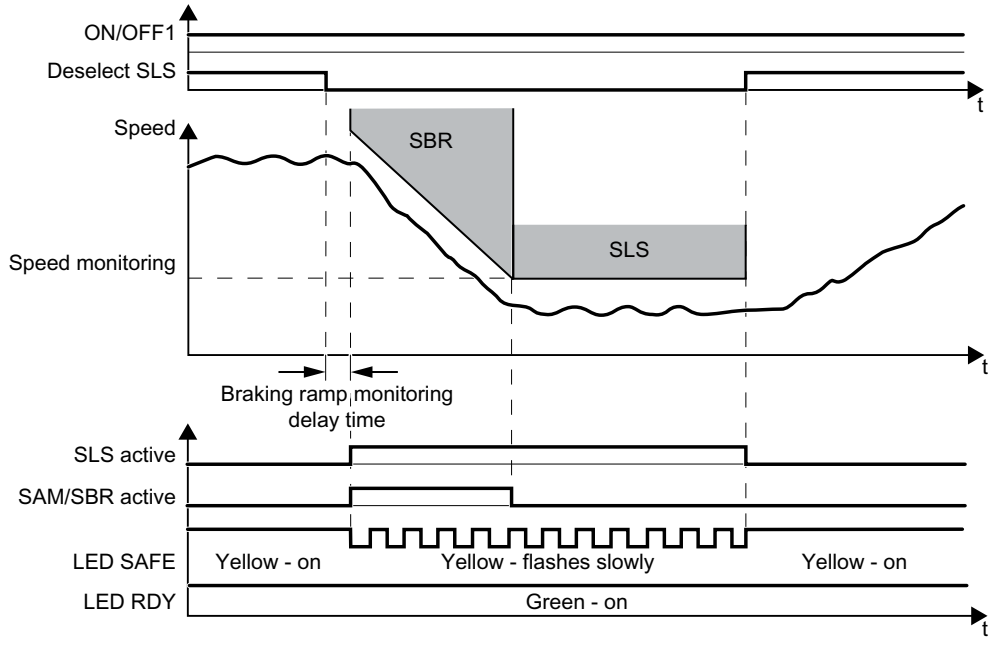


Figure 6-25 Selecting and deselecting the SLS safety function at high speeds

| Inverter signal | Parameter | Included in the PROFIsafe telegram | Can be interconnected with | |
|---|---|---|---|---|
| | | | F-DI | F-DO |
| SLS active | r9722.4 | ✓ | --- | ✓ |
| Deselect SLS | r9720.4 | ✓ | ✓ | --- |
| SAM/SBR active | r9723.16 | --- | --- | --- |
| ON/OFF1 | r0054.0 | --- | --- | --- |

### 6.6.2.2 SLS without braking ramp monitoring

If the machine control selects the SLS safety function via a fail-safe digital input or via PROFIsafe communication, then the motor behaves differently depending on the absolute value of the load speed. These two scenarios are described below.

#### Scenario 1: The absolute value of the load speed is less than the setpoint speed limit.

**Function**

1. The motor continues to follow the speed setpoint.
2. The inverter monitors the speed after the delay time has expired.

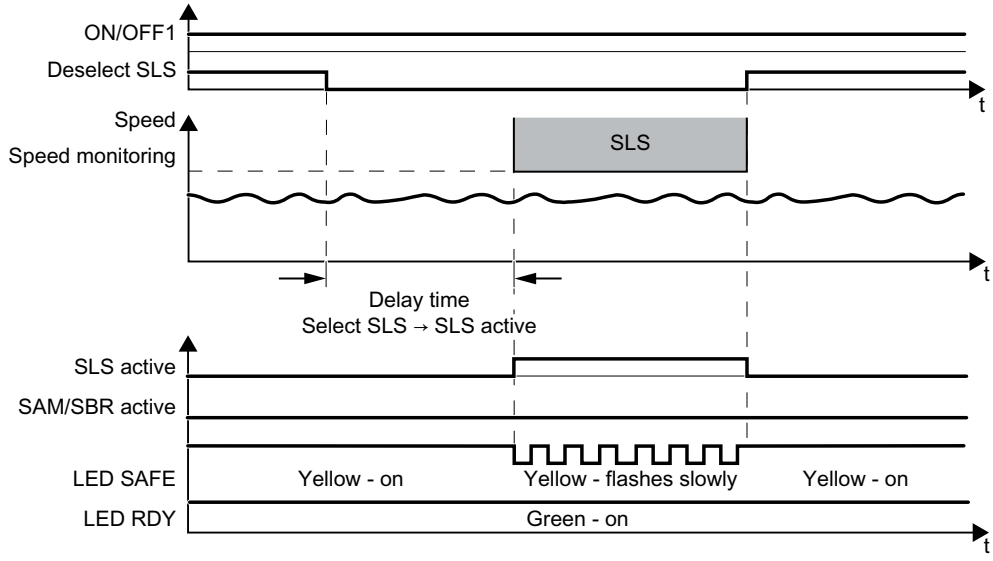


Figure 6-26 Selecting and deselecting the SLS safety function at low speeds

### Scenario 2: The absolute value of the load speed is higher than the monitoring threshold.

**Function**

1. The inverter brakes the motor.
2. The inverter monitors the speed after the delay time has expired.
3. If you deselect SLS, then the motor accelerates again up to the speed setpoint.

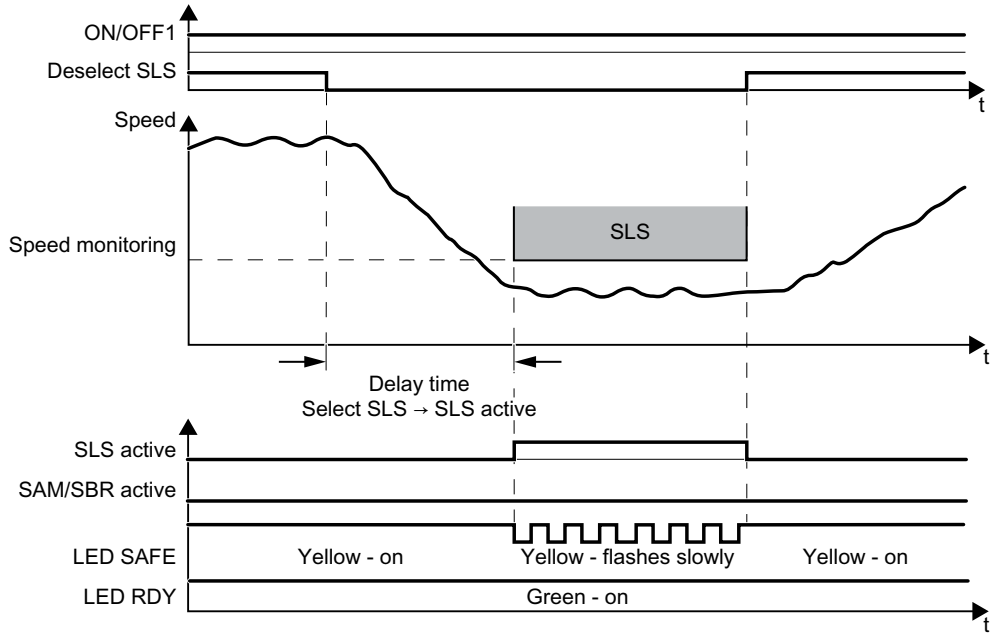


Figure 6-27 Selecting and deselecting the SLS safety function at high speeds

| Inverter signal | Parameters | Included in the PROFIsafe telegram | Can be interconnected with | |
|---|---|---|---|---|
| | | | F-DI | F-DO |
| SLS active | r9722.4 | ✓ | --- | ✓ |
| Deselect SLS | r9720.4 | ✓ | ✓ | --- |
| SAM/SBR active | r9723.16 | --- | --- | --- |
| ON/OFF1 | r0054.0 | --- | --- | --- |

### 6.6.3 Switching over SLS levels

#### Overview

When SLS is active, you can switch between four different speed levels via PROFIsafe. The drive response when switching over to a lower SLS level depends on whether you have selected SLS with or without braking ramp monitoring.

| With braking ramp monitoring | Without braking ramp monitoring |
|---|---|
| 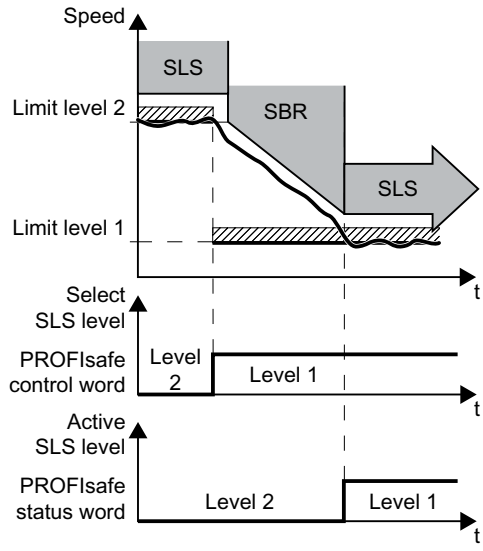  | 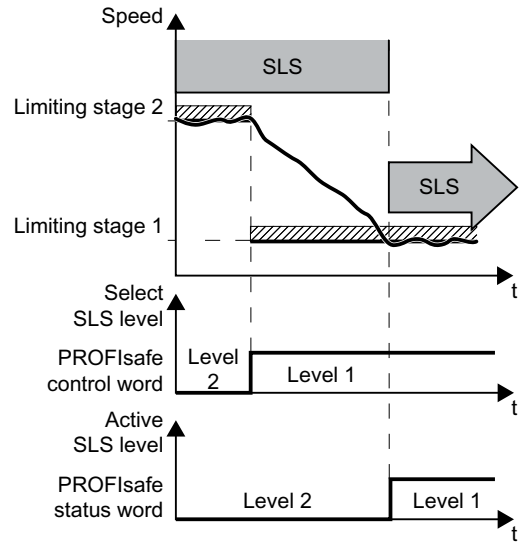  |
| The inverter monitors the motor as it brakes using the SBR (Safe Brake Ramp) function. | After an adjustable time, the inverter switches the SLS monitoring from the higher SLS level to the lower SLS level. |

Switching over SLS levels is only possible via PROFIsafe with control word 1.

The inverter signals the active SLS level via PROFIsafe to the higher-level control.

Control word 1 and status word 1 (extended functions) (Page 53)

### 6.6.3.1 SLS with braking ramp monitoring

#### Function

When you switch from a higher to a lower speed monitoring level (SLS level), the following takes place:

1. The inverter brakes the motor.
2. Once the delay time has expired, the inverter monitors the motor speed using the SBR (Safe Brake Ramp) function.
3. The inverter switches from SBR monitoring to SLS monitoring as soon as one of the following two conditions is fulfilled:
   – The SBR monitoring ramp has reached the value of the SLS monitoring.
     This case is shown in the diagram above.
   – The load speed has decreased down to the value SLS monitoring and the "delay time for braking ramp" has expired.

When you switch from one of the lower monitoring level to a higher speed monitoring level, then the inverter immediately monitors the speed with the higher SLS level.

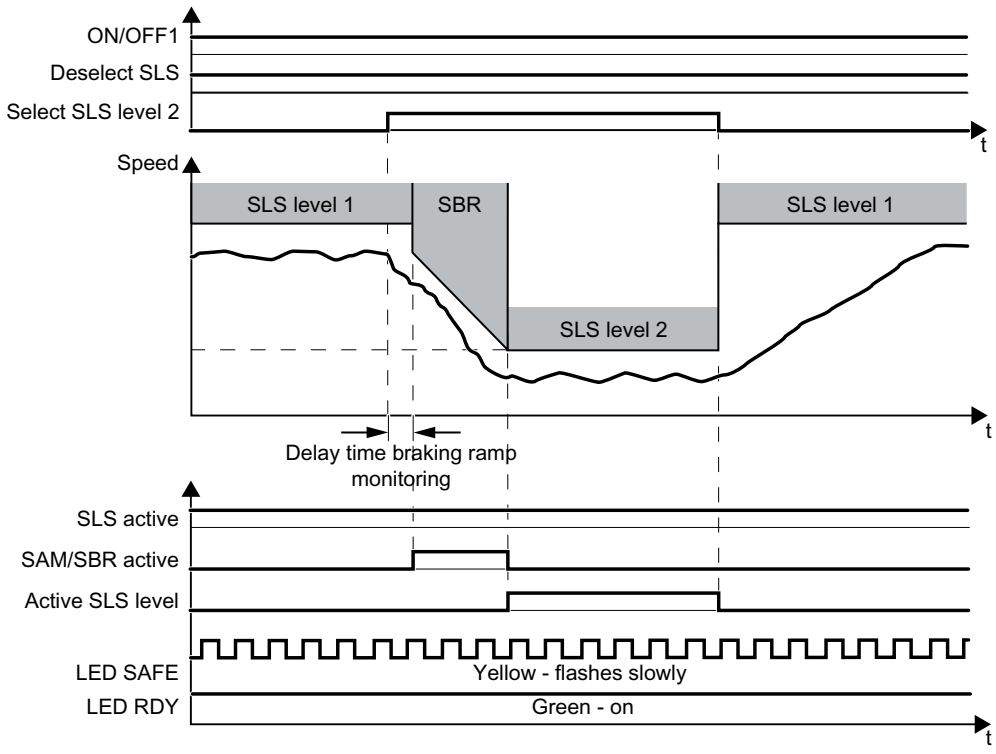


Figure 6-28 Switching between different monitoring thresholds

| Inverter signal | Parameter | Included in the PROFIsafe telegram | Can be interconnected with | |
|---|---|---|---|---|
| | | | F-DI | F-DO |
| SLS active | r9722.4 | ✓ | --- | ✓ |
| Deselect SLS | r9720.4 | ✓ | ✓ | --- |

| Inverter signal | Parameter | Included in the PROFIsafe telegram | Can be interconnected with | |
|---|---|---|---|---|
| | | | F-DI | F-DO |
| SLS level active | r9722.9, r9722.10 | ✓ | --- | ✓ |
| Select SLS level | r9720.9, r9720.10 | ✓ | ✓ | --- |
| SAM/SBR active | r9723.16 | --- | --- | --- |
| ON/OFF1 | r0054.0 | --- | --- | --- |

### 6.6.3.2 SLS without braking ramp monitoring

#### Function

When you switch from a higher to a lower speed monitoring level (SLS level), the following takes place:

1. The inverter brakes the motor.
2. Once the delay time has expired, the inverter monitors the speed using the lower speed monitoring level.

When you switch from one of the lower monitoring level to a higher speed monitoring level, then the inverter immediately monitors the speed with the higher SLS level.

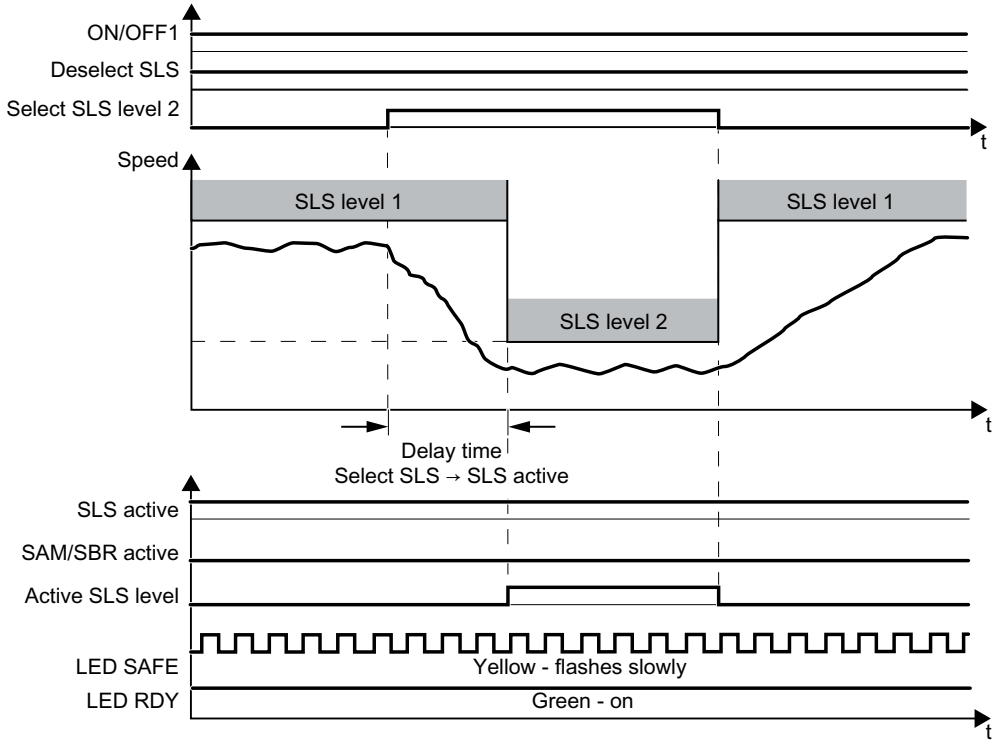


Figure 6-29 Switching between different monitoring thresholds

| Inverter signal | Parameter | Included in the PROFIsafe telegram | Can be interconnected with | |
|---|---|---|---|---|
| | | | F-DI | F-DO |
| SLS active | r9722.4 | ✓ | --- | ✓ |
| Deselect SLS | r9720.4 | ✓ | ✓ | --- |
| SLS level active | r9722.9, r9722.10 | ✓ | --- | ✓ |
| Select SLS level | r9720.9, r9720.10 | ✓ | ✓ | --- |
| SAM/SBR active | r9723.16 | --- | --- | --- |
| ON/OFF1 | r0054.0 | --- | --- | --- |

### 6.6.4 Switching off the motor when SLS is active

#### Description

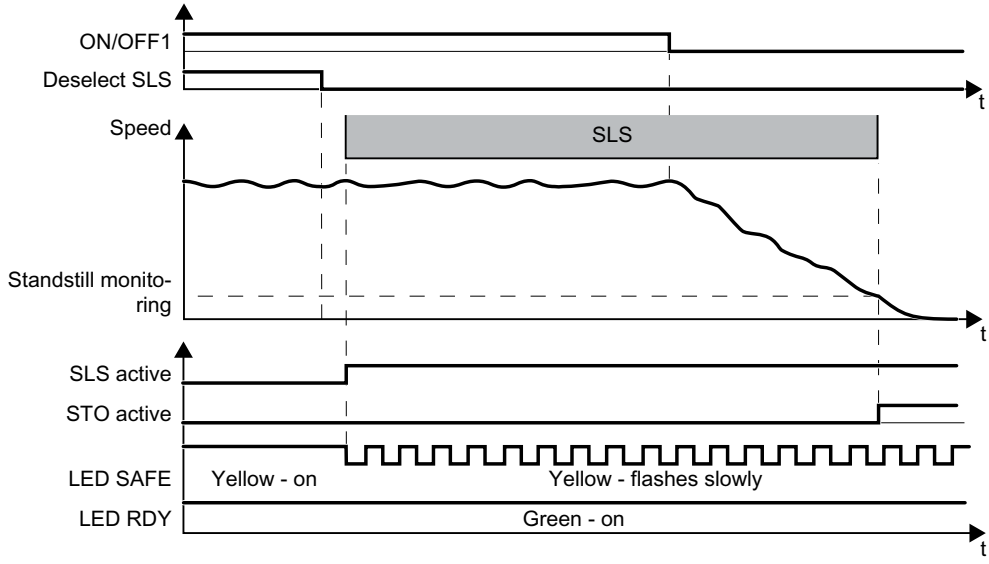


Figure 6-30 OFF1 command when the SLS safety function is active

If you switch off the motor with the SLS function active using the OFF1 or OFF3 command, e.g. when reaching limit switches, the following happens:

1. The inverter brakes the motor with the OFF1 or OFF3 ramp-down time.
2. Also while braking, the inverter monitors the motor speed.
3. When reaching the standstill monitoring, the inverter safely switches off the motor torque with the STO safety function.
4. The motor coasts down to a standstill.

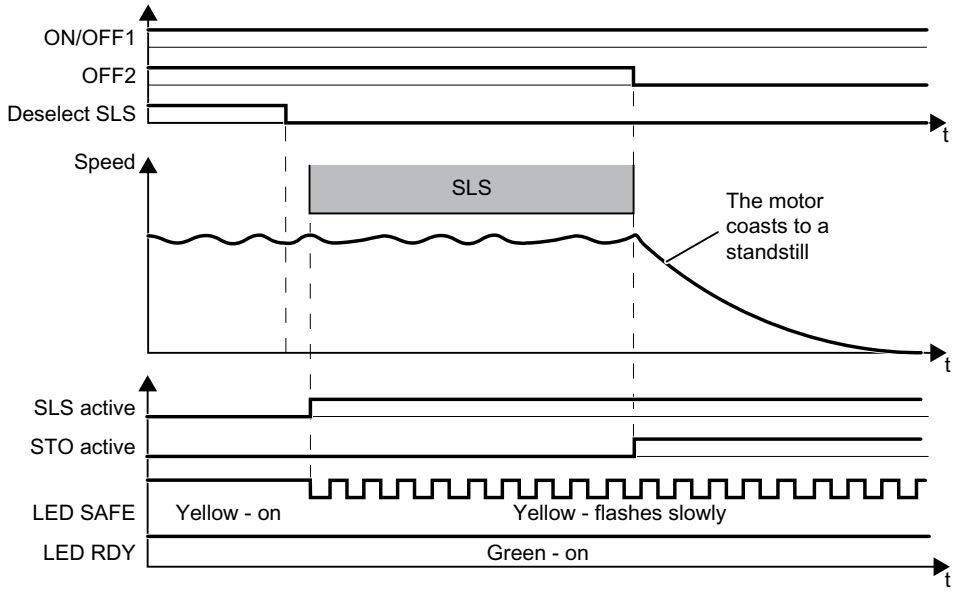


Figure 6-31 OFF2 command when the SLS safety function is active

If you switch off the motor using the OFF2 command, then the inverter immediately safely switches off the motor torque using the STO safety function.

| Inverter signal | Parameter | Included in the PROFIsafe telegram | Can be interconnected with | |
|---|---|---|---|---|
| | | | F-DI | F-DO |
| STO active (extended functions) | r9722.0 | ✓ | --- | ✓ |
| SLS active | r9722.4 | ✓ | --- | ✓ |
| Deselect SLS | r9720.4 | ✓ | ✓ | --- |
| ON/OFF1 | r0054.0 | --- | --- | --- |
| OFF2 | r0054.1 | --- | --- | --- |

### 6.6.5 Switching on the motor when SLS is active

#### Switch on motor

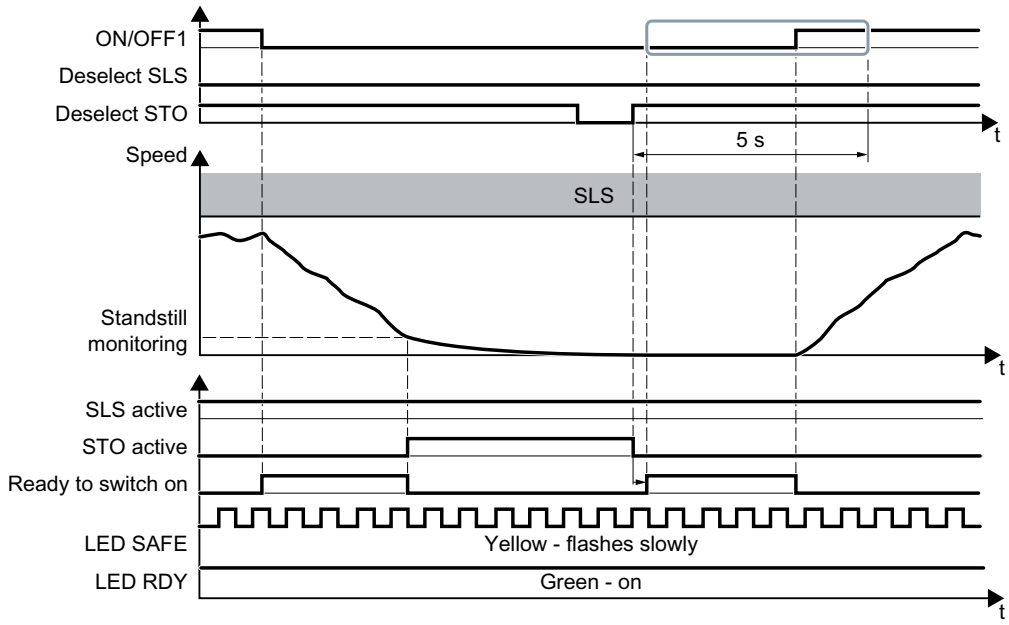


Figure 6-32 Switching the motor off and on (ON/OFF1) when SLS is active

#### Procedure

1. Select STO (or SS1).
2. Deselect STO (or SS1).
3. After deselecting STO, wait until the inverter is "ready to switch on".
   Alternatively: After deselecting STO, wait a certain time before switching on. We recommend a wait time of 200 ms.
4. Switch on motor within 5 s after deselecting STO (ON command).

You have activated the motor with active SLS.
❐

| Inverter signal | Parameter | Included in the PROFIsafe telegram | Can be interconnected with | |
|---|---|---|---|---|
| | | | F-DI | F-DO |
| STO active (Extended Functions) | r9722.0 | ✓ | --- | ✓ |
| Deselect STO (Extended Functions) | r9720.0 | ✓ | ✓ | --- |
| SLS active | r9722.4 | ✓ | --- | ✓ |
| Deselect SLS | r9720.4 | ✓ | ✓ | --- |
| Ready for switching on | r0052.0 | --- | --- | --- |
| ON/OFF1 | r0054.0 | --- | --- | --- |

### You have not switched on the motor within 5 seconds

If you do not switch on the motor within 5 seconds after deselecting STO, the following happens:

- The inverter goes back into the STO state.
- The inverter no longer responds to the ON command.
- The inverter outputs Alarm A01795.

To switch on the motor you must repeat the procedure described above.

### 6.6.6 Response to a discrepancy when SLS is active

#### Drive response

The inverter responds with the active SLS safety function to a discrepancy at the failsafe digital input.

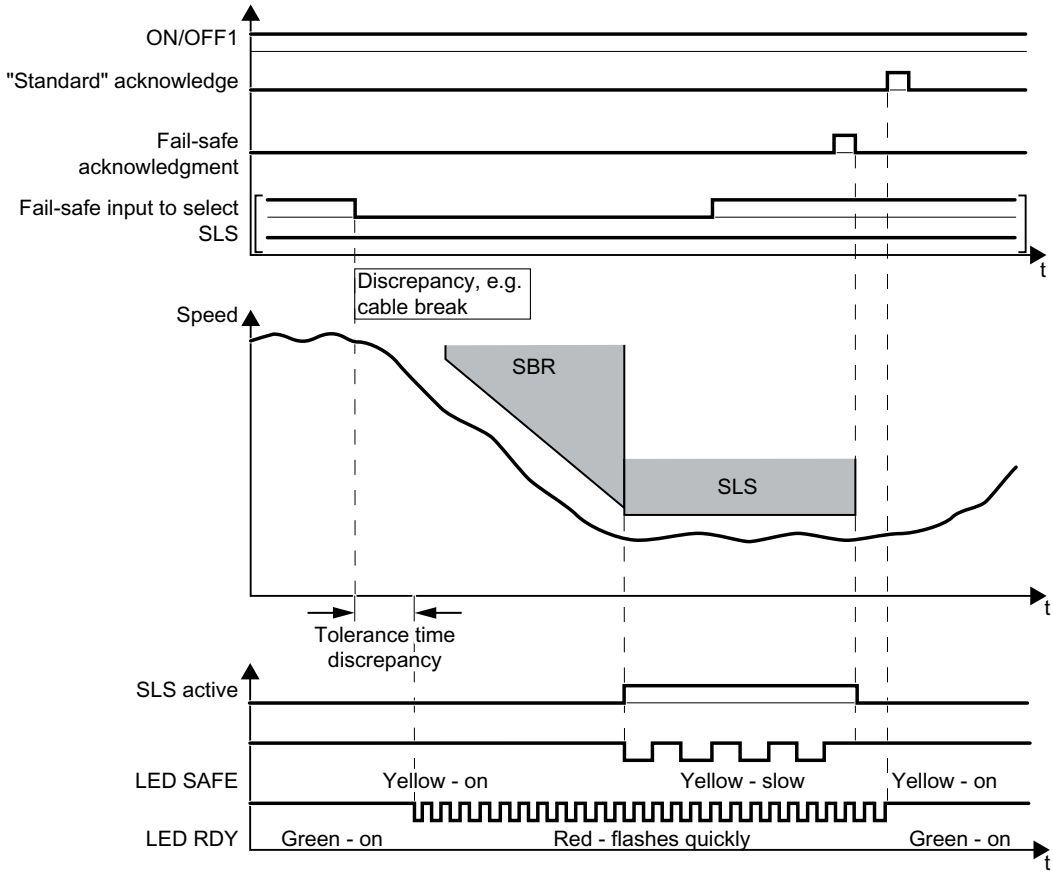


Figure 6-33 Behavior of the inverter for discrepancy of the input signal for SLS

The inverter does not set the error bit of the safety functions (= internal event).

After the tolerance time has expired, the inverter signals the discrepancy (Alarm C01770 or C30770). The SLS function remains active, and the motor remains switched on.

Independent of the voltage levels available, the inverter sets the evaluation of the discrepant F-DI into the safe state (= zero) until you acknowledge the inverter using a failsafe signal or you switch off the power supply voltage and switch it on again.

| Inverter signal | Parameter | Included in the PROFIsafe telegram | Can be interconnected with | |
|---|---|---|---|---|
| | | | F-DI | F-DO |
| SLS active | r9722.4 | ✓ | --- | ✓ |
| Deselect SLS | r9720.4 | ✓ | ✓ | --- |
| "Standard" acknowledgment | p2103 | --- | --- | --- |

| Inverter signal | Parameter | Included in the PROFIsafe telegram | Can be interconnected with | |
|---|---|---|---|---|
| | | | F-DI | F-DO |
| Failsafe acknowledgment | r9720.7 | ✓ | ✓ | --- |
| ON/OFF1 | r0054.0 | --- | --- | --- |

## Deselecting SLS after a discrepancy

### Procedure

1. Remove the discrepancy.
2. Acknowledge the discrepancy message with the failsafe acknowledge signal via a failsafe digital input: F-DI = 0 → 1 → 0.
   Alternatively, you can acknowledge the message in one of the following ways. However, the drive stops in these cases:
   – Select the STO function and then deselect again: F-DI = 1 → 0 → 1.
   – Select the SS1 function and then deselect again: F-DI = 1 → 0 → 1.
   – Switch off the inverter power supply and switch it on again.
3. Acknowledge the inverter with the "standard" acknowledge signal.

You have acknowledged the discrepancy message and deselected SLS.
❒

## 6.6.7 Limit value violation when SLS is active

### Drive response

When motion monitoring detects a fault when SLS is active, the inverter responds by triggering a STOP A or STOP B. The inverter response is parameterized during commissioning.

Stop responses (Page 255)

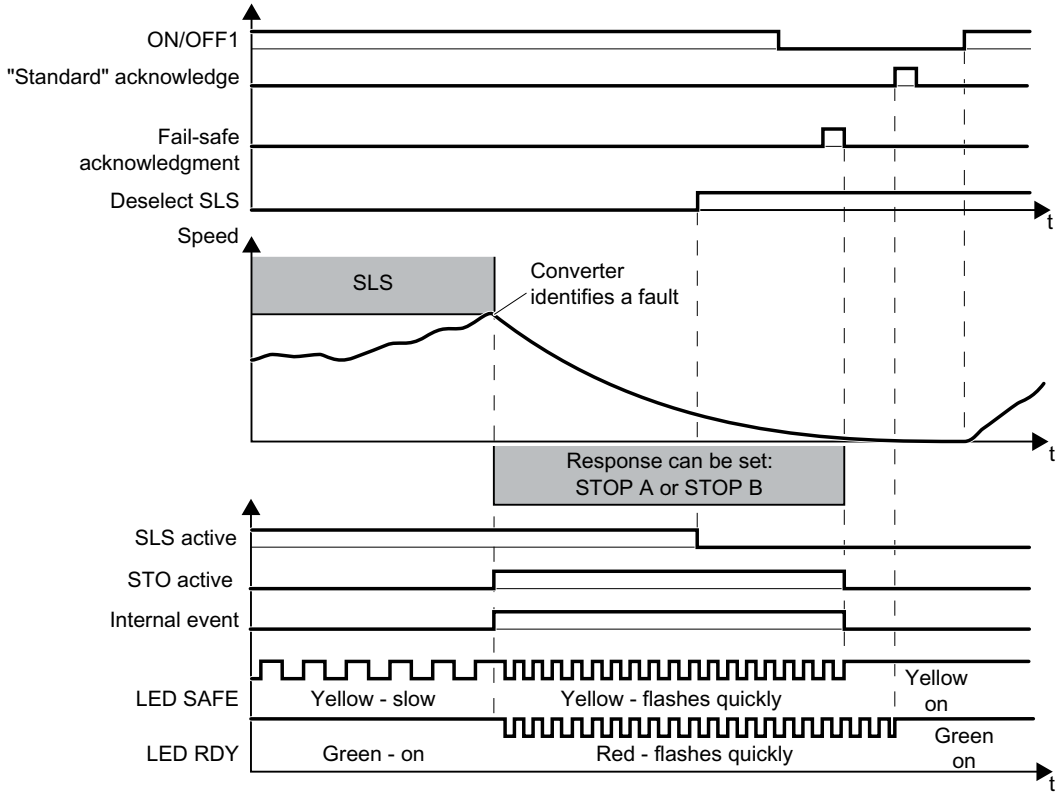


Figure 6-34 Limit value violation of safety function SLS. Example with STOP A as fault response

| Inverter signal | Parameter | Included in the PROFIsafe telegram | Can be interconnected with | |
|---|---|---|---|---|
| | | | F-DI | F-DO |
| Internal event | r9722.7 | ✓ | --- | ✓ |
| STO active (Extended Functions) | r9722.0 | ✓ | --- | ✓ |
| SLS active | r9722.4 | ✓ | --- | ✓ |
| Deselect SLS | r9720.4 | ✓ | ✓ | --- |
| "Standard" acknowledgment | p2103 | --- | --- | --- |
| Failsafe acknowledgment | r9720.7 | ✓ | ✓ | --- |
| ON/OFF1 | r0054.0 | --- | --- | --- |

## Switching the motor on after an internal event

### Procedure

1. Deselect the SLS function.
2. Issue an OFF1 command (ON/OFF1 = 0).
3. Acknowledge the internal event in one of the following ways:
   - Failsafe acknowledgment using PROFIsafe control word 0, bit 7 = 0 → 1 → 0.
   - Failsafe acknowledge signal via a failsafe digital input: F-DI = 0 → 1 → 0.
   - Select the STO function and deselect again (PROFIsafe control word 0, bit 0 or F-DI: 1 → 0 → 1).
   - Select the SS1 function and deselect again (PROFIsafe control word 0, bit 1 or F-DI: 1 → 0 → 1).
   - Switch off the inverter power supply and switch it on again.
4. Acknowledge the inverter with the "standard" acknowledge signal.
5. Switch on the motor (ON/OFF1 = 1).

You have acknowledged the internal event and switched on the motor again.
❐

# 6.7 Safe Speed Monitor (SSM)

## 6.7.1 Overview

### What can you find in this Chapter?

The relevant operating cases for the SSM function are described in this chapter.

Table 6-7 Response of the SSM function when the motor is switched on (ON/OFF1 = 1)

| | |
|---|---|
| Feedback signal | The SSM function signals as to whether the motor speed is above or below the set SSM limit value.<br>Selecting SSM when the motor is switched on (Page 234) |

Table 6-8 Switching the motor on and off when SSM is active or not active

| | Switching on the motor (ON/OFF1 = 0 → 1) | Switching off the motor (ON/OFF1, OFF2 or OFF3 = 1 → 0) |
|---|---|---|
| SSM is not active | If SSM is not active, then there are no restrictions for switching on and switching off the motor. | |
| SSM is active | If SSM is active, you must take into account several special issues when switching on the motor.<br>Switching on the motor when SSM is active (Page 239). | The drive response depends on the signal that you use to switch off the motor.<br>Switching off the motor when SSM is active (Page 235) |

## 6.7.2 Selecting SSM when the motor is switched on

### Description

The safety function SSM cannot be selected or deselected using external control signals. SSM is active if all of the following conditions are met:

- You have enabled one or several extended safety functions.
- For the SSM function, you have set a monitoring speed of > 0.

After switching on the power supply voltage, initially the inverter always sets the feedback signal "Speed below limit value" of the SSM function to 0.

When the motor is switched on, the inverter compares the load speed with the speed limit.

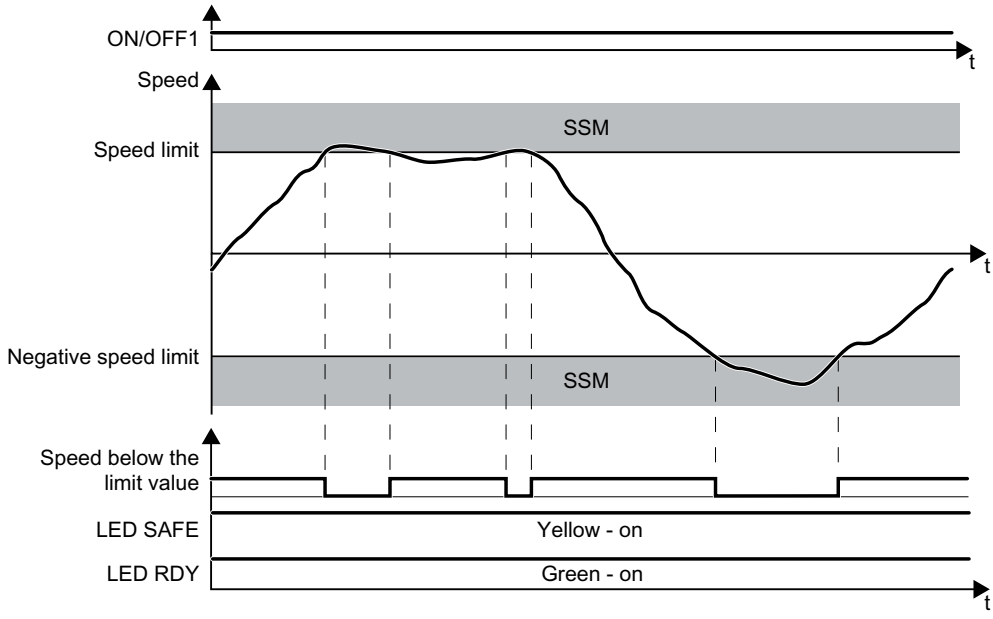


Figure 6-35 Time response of the safety function SSM (Safe Speed Monitor)

| Inverter signal | Parameter | Included in the PROFIsafe telegram | Can be interconnected with | |
|---|---|---|---|---|
| | | | F-DI | F-DO |
| SSM feedback signal active (speed below limit value) | r9722.15 | ✓ | --- | ✓ |
| ON/OFF1 | r0054.0 | --- | --- | --- |

### 6.7.3 Switching off the motor when SSM is active

The drive response depends on the following conditions:

- Motor speed at the instant when it is switched off
- Off command: OFF1, OFF2 or OFF3
- Setting the SSM function:
  - Feedback signal "SSM active" for pulse inhibit *remains active:*
    When the motor is switched off, the inverter prevents the motor from accelerating by issuing an STO. When the motor is switched off, "Status SSM" = 1.
  - Feedback signal "SSM active" for pulse inhibit *becomes inactive:*
    When the motor is switched off, the inverter sets "Status SSM" = 0.

#### When switching off, the speed is less than the SSM limit value

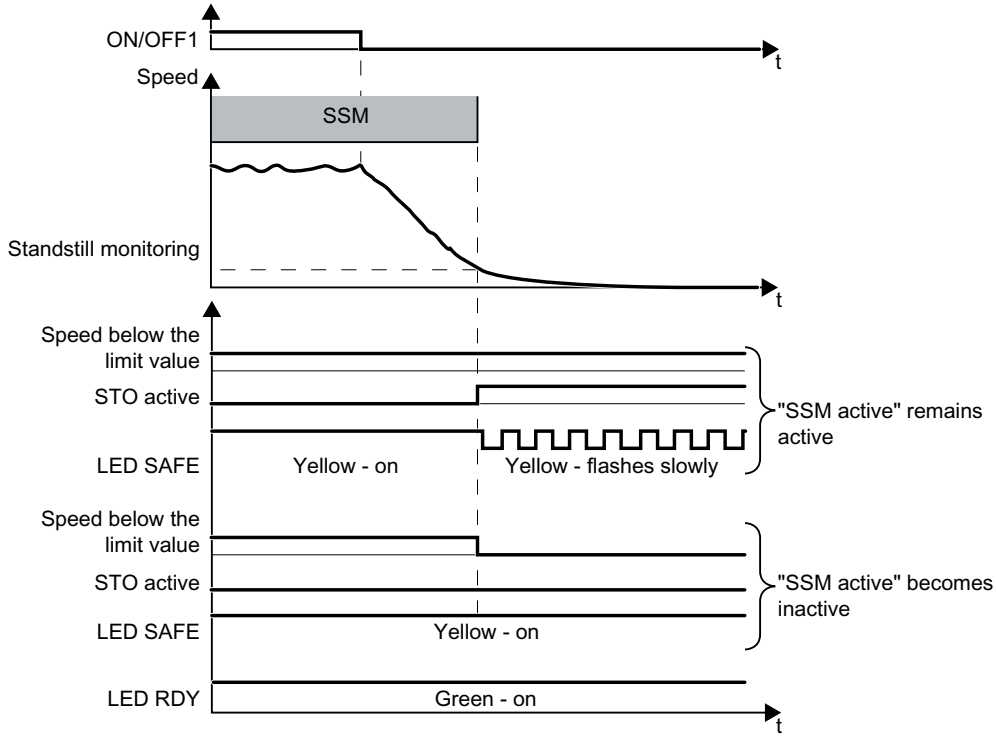


Figure 6-36 OFF1 command when the SSM safety function is active

If you switch off the motor with the SSM function active using the OFF1 or OFF3 command, e.g. when reaching limit switches, the following happens:

1. The inverter brakes the motor down to standstill and then switches it off.
2. Also while braking, the inverter monitors the motor speed.

If the "SSM active" feedback signal should remain active when the pulses are inhibited, then the inverter safely switches off the motor torque using the safety function STO.

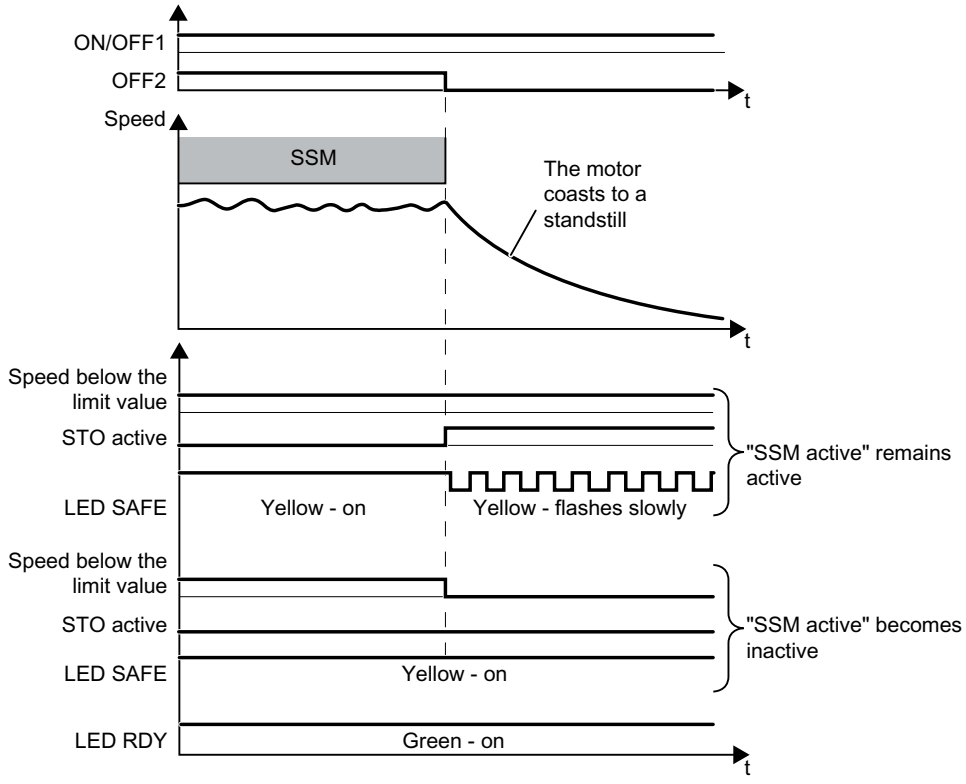


Figure 6-37 OFF2 command when the SSM safety function is active

The inverter immediately switches off the motor with the OFF2 command.

If the "SSM active" feedback signal should remain active when the pulses are inhibited, then the inverter safely switches off the motor torque using the safety function STO.

| Inverter signal | Parameter | Included in the PROFIsafe telegram | Can be interconnected with | |
|---|---|---|---|---|
| | | | F-DI | F-DO |
| STO active (extended functions) | r9722.0 | ✓ | --- | ✓ |
| SSM feedback signal active (speed below limit value) | r9722.15 | ✓ | --- | ✓ |
| ON/OFF1 | r0054.0 | --- | --- | --- |
| OFF2 | r0054.1 | --- | --- | --- |

### When switching off, the speed is higher than the SSM limit value

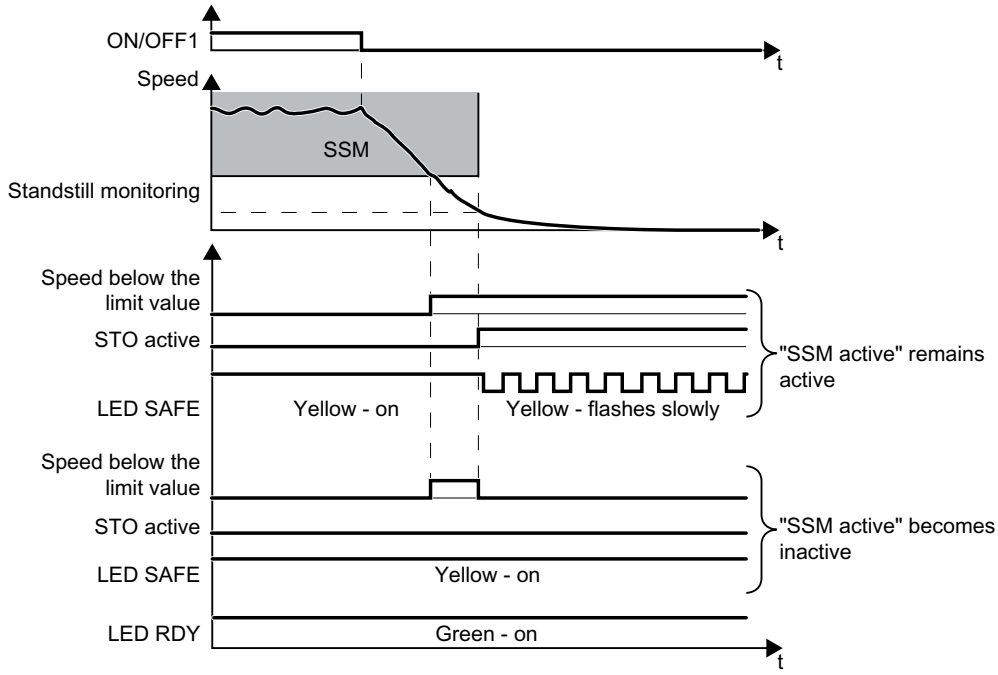


Figure 6-38 OFF1 command when the SSM safety function is active

If you switch off the motor with the SSM function active using the OFF1 or OFF3 command, e.g. when reaching limit switches, the following happens:

1. The inverter brakes the motor down to standstill and then switches it off.
2. Also while braking, the inverter monitors the motor speed.

If the "SSM active" feedback signal should remain active when the pulses are inhibited, then the inverter safely switches off the motor torque using the safety function STO.

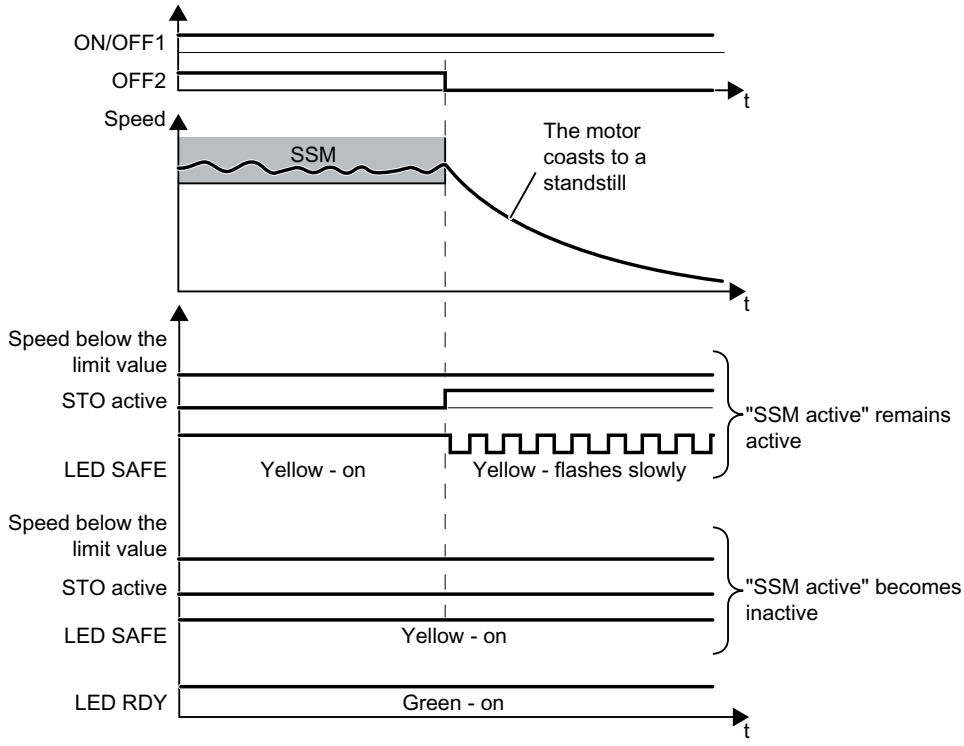


Figure 6-39 OFF2 command when the SSM safety function is active

The inverter immediately switches off the motor with the OFF2 command.

If the "SSM active" feedback signal should remain active when the pulses are inhibited, then the inverter safely switches off the motor torque using the safety function STO.

The feedback signal "SSM active" remains = 0.

| Inverter signal | Parameter | Included in the PROFIsafe telegram | Can be interconnected with | |
|---|---|---|---|---|
| | | | F-DI | F-DO |
| STO active (extended functions) | r9722.0 | ✓ | --- | ✓ |
| SSM feedback signal active (speed below limit value) | r9722.15 | ✓ | --- | ✓ |
| ON/OFF1 | r0054.0 | --- | --- | --- |
| OFF2 | r0054.1 | --- | --- | --- |

## 6.7.4 Switching on the motor when SSM is active

The procedure for switching on the motor depends on how you have set the SSM function.

### The feedback signal "SSM active" for pulse inhibit becomes inactive

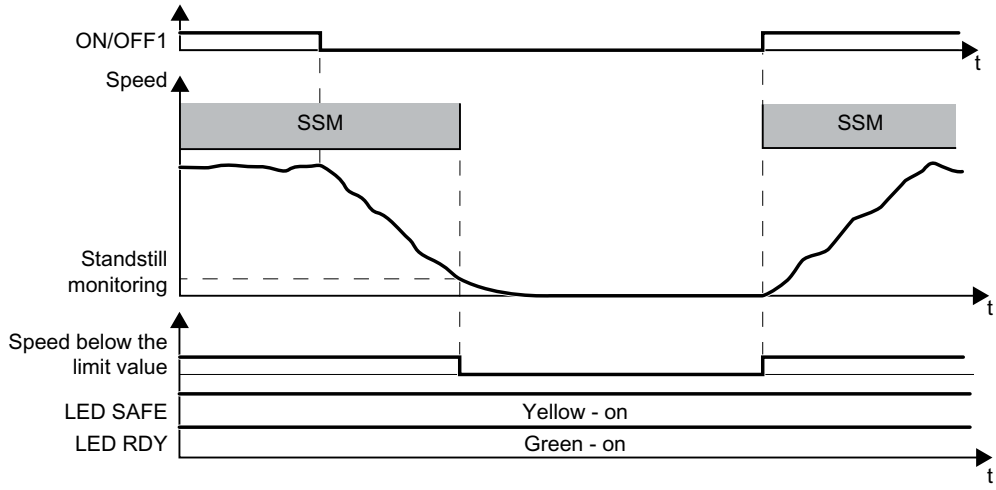


Figure 6-40 Switching on the motor when the SSM function is active, interrupting SSM

With this setting, the SSM function does not influence switching on the motor. SSM is active when you switch on the motor.

| Inverter signal | Parameter | Included in the PROFIsafe telegram | Can be interconnected with | |
|---|---|---|---|---|
| | | | F-DI | F-DO |
| SSM feedback signal active (speed below limit value) | r9722.15 | ✓ | --- | ✓ |
| ON/OFF1 | r0054.0 | --- | --- | --- |

## The feedback signal "SSM active" for pulse inhibit remains active

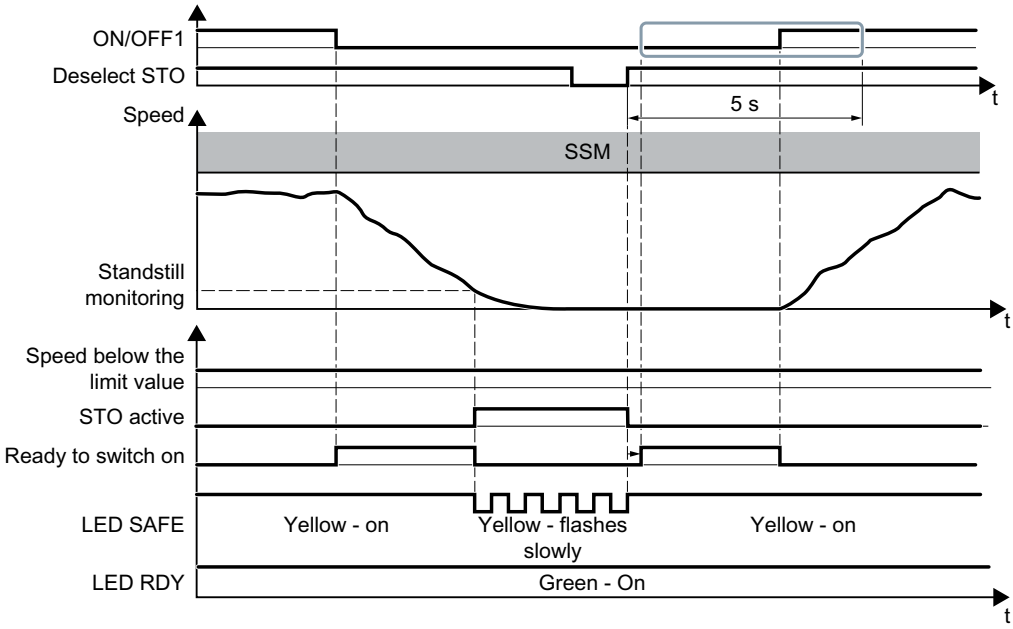


Figure 6-41 Switching on the motor when SSM is active

With this setting, you must maintain a certain sequence before switching on the motor.

### Procedure

1. Select STO (or SS1) after the motor has been switched off.
2. Deselect STO (or SS1) again before you switch on the motor.
3. After deselecting STO, wait until the inverter is "ready to switch on".
   Alternatively: After deselecting STO, wait a certain time before switching on. We recommend a wait time of 200 ms.
4. Switch on motor within 5 s after deselecting STO (ON command).

You have switched on the motor.
❒

| Inverter signal | Parameter | Included in the PROFIsafe telegram | Can be interconnected with | |
|---|---|---|---|---|
| | | | F-DI | F-DO |
| STO active (Extended Functions) | r9722.0 | ✓ | --- | ✓ |
| Deselect STO (Extended Functions) | r9720.0 | ✓ | ✓ | --- |
| SSM feedback signal active (speed below limit value) | r9722.15 | ✓ | --- | ✓ |
| ON/OFF1 | r0054.0 | --- | --- | --- |
| Ready for switching on | r0052.0 | --- | --- | --- |

### You have not switched on the motor within 5 seconds

If you do not switch on the motor within 5 seconds after deselecting STO, the following happens:

- The inverter goes back into the STO state.
- The inverter no longer responds to the ON command.
- The inverter outputs Alarm A01795.

To switch on the motor you must repeat the procedure described above.

# 6.8 Safe Direction (SDI)

## 6.8.1 Overview

### What can you find in this Chapter?

The relevant operating cases for the SDI function are described in this chapter.

Table 6-9 Response of the SDI function when the motor is switched on (ON/OFF1 = 1)

| | |
|---|---|
| Selecting and deselecting SDI | Selecting and deselecting SDI when the motor is switched on (Page 243) |
| Discrepancy in the input signal | The fail-safe digital input to select SDI identifies an error.<br>Response to a discrepancy when Safe Direction is active (SDI) (Page 249) |
| Limit value violation | The motor rotates in the monitored direction.<br>Limit value violation when Safe Direction (SDI) is active (Page 251) |

Table 6-10 Switching the motor on and off when SDI is active or not active

| | Switching on the motor (ON/OFF1 = 0 → 1) | Switching off the motor (ON/OFF1, OFF2 or OFF3 = 1 → 0) |
|---|---|---|
| SDI is not active | If SDI is not active, then there are no restrictions for switching on and switching off the motor. | |
| SDI is active | If your application requires that SDI always remains active, then you must take into account several special issues when switching on the motor.<br>Switching on the motor when SDI is active (Page 246) | The drive response depends on the signal that you use to switch off the motor.<br>Switching off the motor when SDI is active (Page 244) |

## 6.8.2 Selecting and deselecting SDI when the motor is switched on

### Select SDI

#### Function

1. The higher-level control selects the SDI safety function via a fail-safe digital input or via PROFIsafe safe communication.
2. The inverter limits the speed to the permitted direction of rotation. When SDI is selected, if the motor rotates in the impermissible direction, then the inverter brakes the motor down to standstill.
3. After the delay time has expired, the inverter monitors the selected direction of rotation of the motor.
   The inverter tolerates brief motion in the monitored direction of rotation up to an adjustable angle of rotation of the motor shaft.

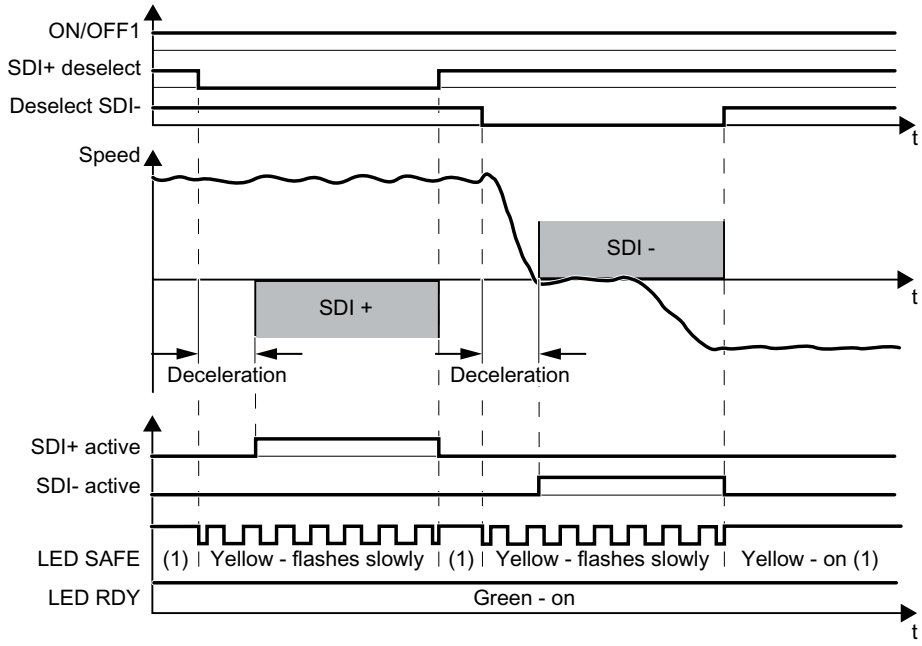


Figure 6-42 Time response of the safety function SDI (Safe direction)

| Inverter signal | Parameters | Included in the PROFIsafe telegram | Can be interconnected with | |
|---|---|---|---|---|
| | | | F-DI | F-DO |
| SDI+ active | r9722.12 | ✓ | --- | ✓ |
| SDI+ deselect | r9720.12 | ✓ | ✓ | --- |
| SDI- active | r9722.13 | ✓ | --- | ✓ |
| Deselect SDI- | r9720.13 | ✓ | ✓ | --- |
| ON/OFF1 | r0054.0 | --- | --- | --- |

## 6.8.3 Switching off the motor when SDI is active

### Description

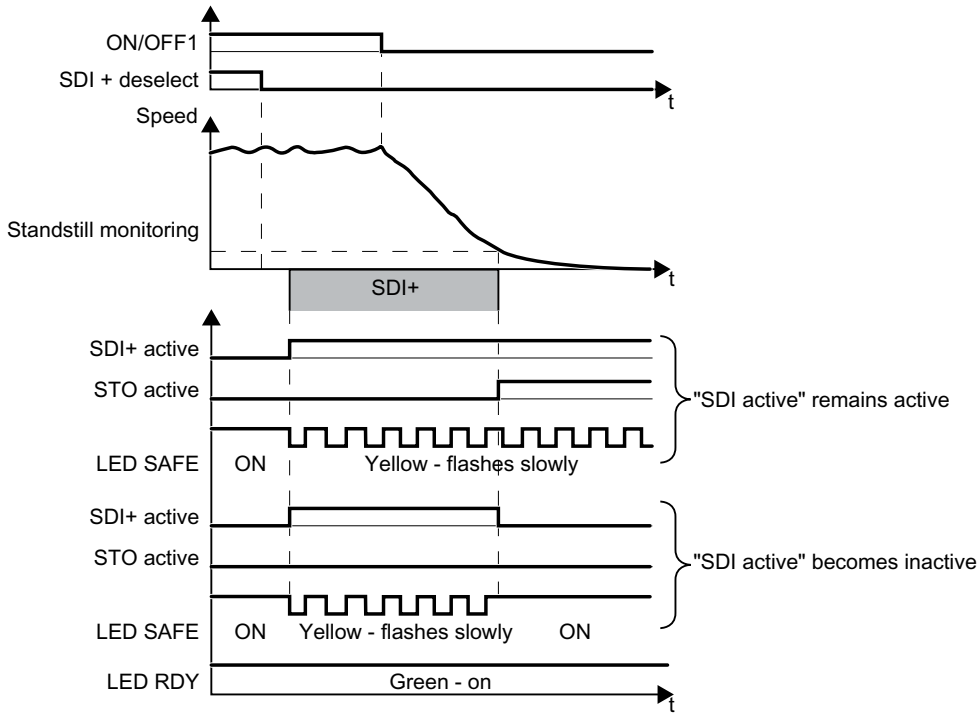


Figure 6-43 OFF1 command when the SDI safety function is active

If you switch off the motor with the SDI function active using the OFF1 or OFF3 command, e.g. when reaching limit switches, the following happens:

1. The inverter brakes the motor with the OFF1 or OFF3 ramp-down time until the speed reaches the standstill monitoring threshold.
2. Also while braking, the inverter monitors the direction of rotation.

You can set the behavior of the inverter after switching-off the motor in two different ways:

1. Feedback signal "SDI active" for pulse inhibit *remains active*
   With this setting, the inverter safely switches off the motor torque when reaching the standstill monitoring using the STO safety function. The inverter ensures that the motor does not actively accelerate. The "SDI active" signal also remains at 1 for a motor that has been switched off.
2. Feedback signal "SDI active" for pulse inhibit *becomes inactive*
   With this setting the inverter inverter off the motor torque, but not safely. The system does not safely prevent that the motor actively accelerates. Therefore, the inverter sets the "SDI active" signal to 0 when the motor is switched off.

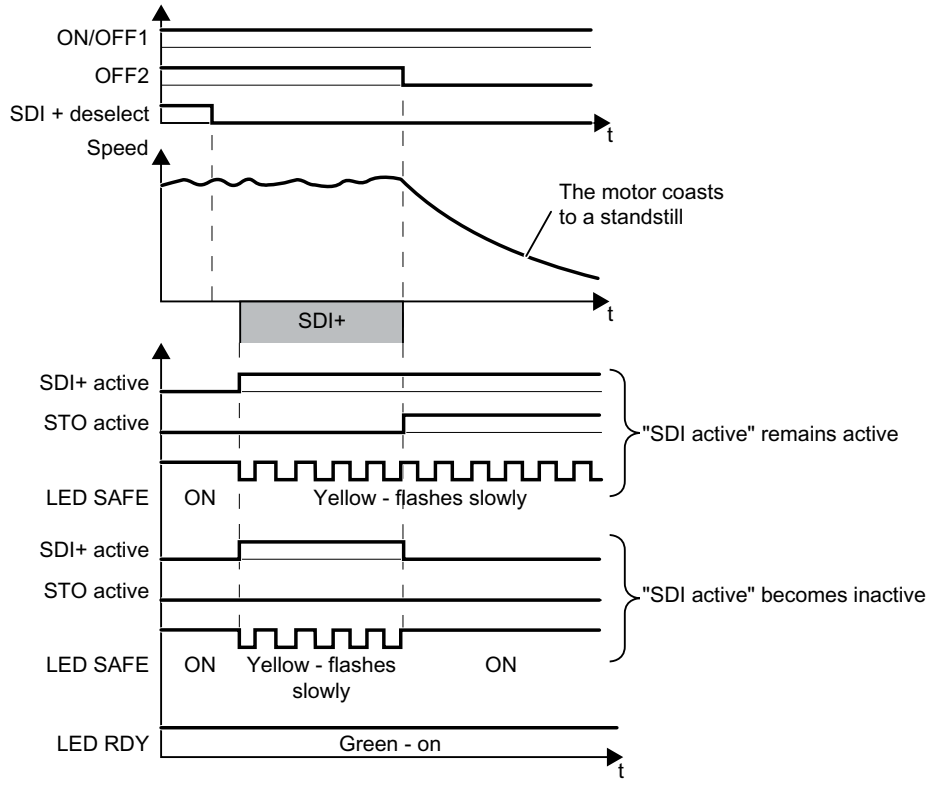


Figure 6-44 OFF2 command when the SDI safety function is active

If you switch the motor off with the OFF2 command when the SDI safety function is active, the inverter immediately switches off the motor. Depending on the selected setting, the inverter immediately switches off the motor torque with the STO safety function.

| Inverter signal | Parameters | Included in the PROFIsafe telegram | Can be interconnected with | |
|---|---|---|---|---|
| | | | F-DI | F-DO |
| STO active (extended functions) | r9722.0 | ✓ | --- | ✓ |
| SDI+ active | r9722.12 | ✓ | --- | ✓ |
| SDI+ deselect | r9720.12 | ✓ | ✓ | --- |
| SDI- active | r9722.13 | ✓ | --- | ✓ |
| Deselect SDI- | r9720.13 | ✓ | ✓ | --- |
| ON/OFF1 | r0054.0 | --- | --- | --- |
| OFF2 | r0054.1 | --- | --- | --- |

## 6.8.4 Switching on the motor when SDI is active

The procedure for switching on the motor depends on how you have set the SDI function.

### The feedback signal "SDI active" for pulse inhibit becomes inactive

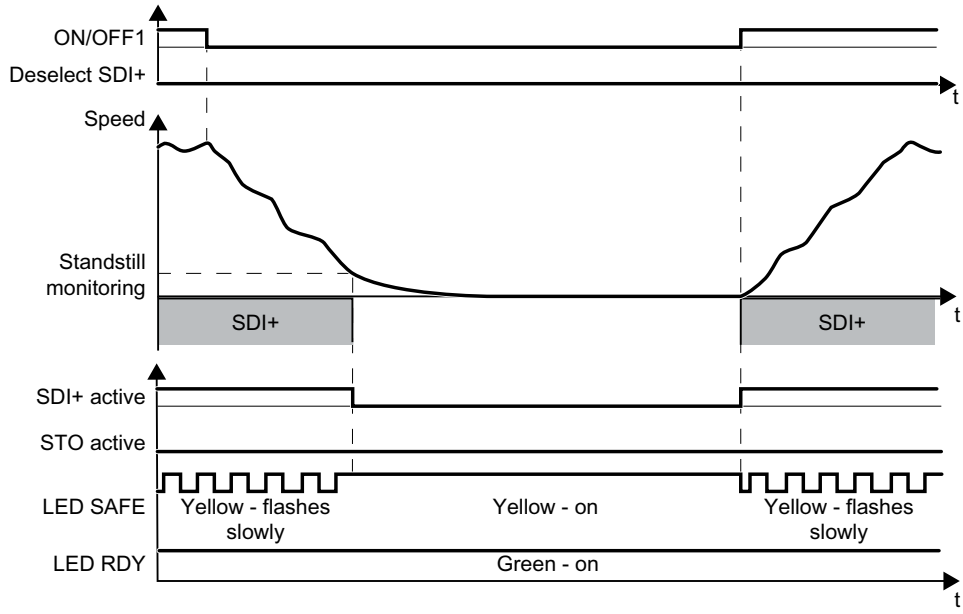


Figure 6-45 Switching the motor off and on when SDI is active, interrupts the feedback signal from SDI

With this setting, the SDI function does not influence switching on the motor. SDI is active when you switch on the motor.

| Inverter signal | Parameter | Included in the PROFI-safe telegram | Can be interconnected with | |
|---|---|---|---|---|
| | | | F-DI | F-DO |
| STO active (Extended Functions) | r9722.0 | ✓ | --- | ✓ |
| SDI+ active | r9722.12 | ✓ | --- | ✓ |
| SDI+ deselect | r9720.12 | ✓ | ✓ | --- |
| SDI- active | r9722.13 | ✓ | --- | ✓ |
| Deselect SDI | r9720.13 | ✓ | ✓ | --- |
| ON/OFF1 | r0054.0 | --- | --- | --- |

## The feedback signal "SDI active" for pulse inhibit remains active

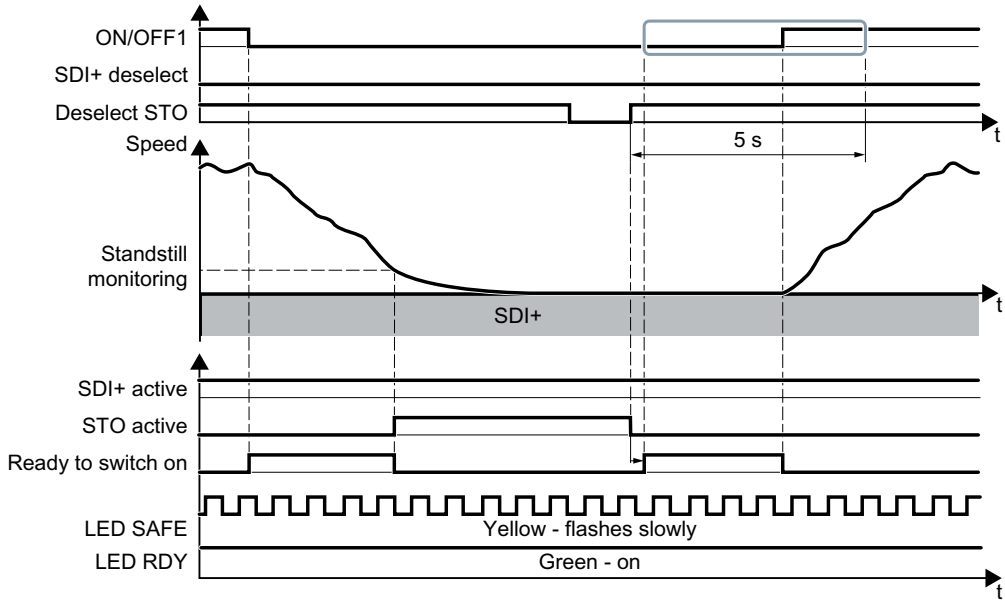


Figure 6-46 Switching the motor off and on when SDI is active

### Procedure

1. Select STO (or SS1).
2. Deselect STO (or SS1) again.
3. After deselecting STO, wait until the inverter is "ready to switch on".
   Alternatively: After deselecting STO, wait a certain time before switching on. We recommend a wait time of 200 ms.
4. Switch on motor within 5 s after deselecting STO (ON command).

You have switched on the motor again.
❒

| Inverter signal | Parameter | Included in the PROFIsafe telegram | Can be interconnected with | |
|---|---|---|---|---|
| | | | F-DI | F-DO |
| STO active (Extended Functions) | r9722.0 | ✓ | --- | ✓ |
| Deselect STO (Extended Functions) | r9720.0 | ✓ | ✓ | --- |
| SDI+ active | r9722.12 | ✓ | --- | ✓ |
| SDI+ deselect | r9720.12 | ✓ | ✓ | --- |
| SDI- active | r9722.13 | ✓ | --- | ✓ |
| Deselect SDI | r9720.13 | ✓ | ✓ | --- |
| ON/OFF1 | r0054.0 | --- | --- | --- |
| Ready for switching on | r0052.0 | --- | --- | --- |

### You have not switched on the motor within 5 seconds

If you do not switch on the motor within 5 seconds after deselecting STO, the following happens:

- The inverter goes back into the STO state.
- The inverter no longer responds to the ON command.
- The inverter outputs Alarm A01795.

To switch on the motor you must repeat the procedure described above.

## 6.8.5 Response to a discrepancy when Safe Direction is active (SDI)

### Drive response

The inverter responds with the active SDI safety function to a discrepancy at the failsafe digital input.

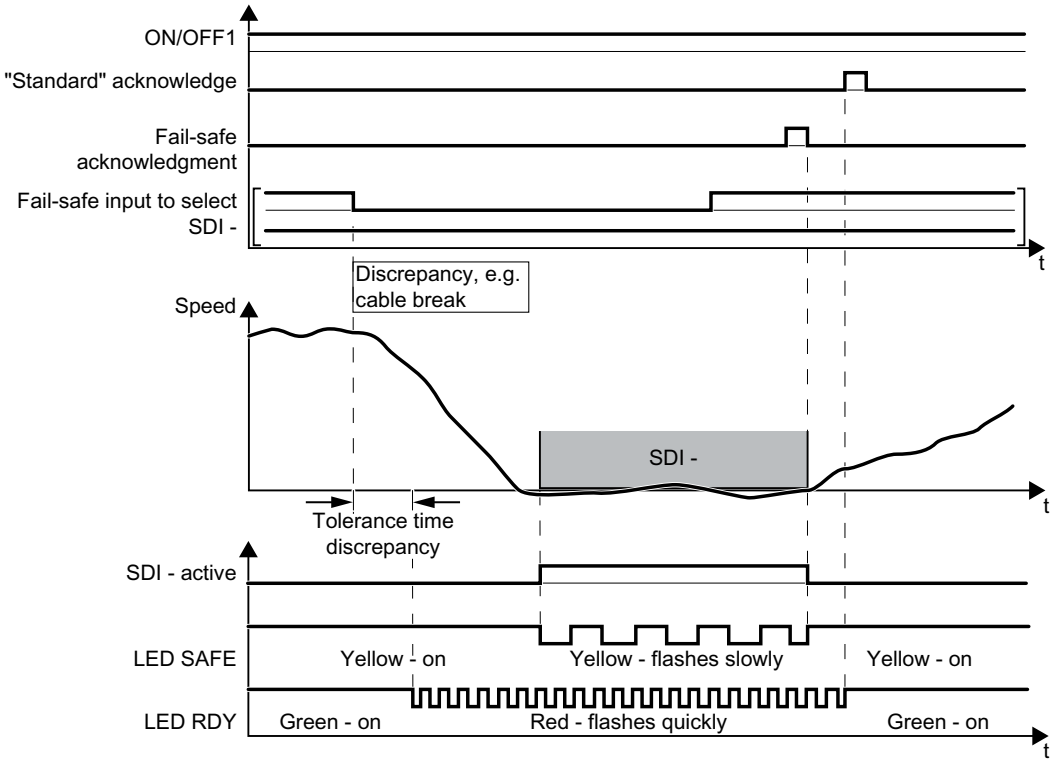


Figure 6-47 Response of the inverter for discrepancy of the input signal for SDI (SDI- as example)

The inverter does not set the error bit of the safety functions (= internal event).

After the tolerance time has expired, the inverter signals the discrepancy (Alarm C01770 or C30770). The SDI function remains active, and the motor remains switched on.

Independent of the voltage levels available, the inverter sets the evaluation of the discrepant failsafe digital input into the safe state (= zero) until you acknowledge the inverter using a failsafe signal or you switch off the power supply voltage and switch it on again.

| Inverter signal | Parameter | Included in the PROFI-safe telegram | Can be interconnected with | |
|---|---|---|---|---|
| | | | F-DI | F-DO |
| STO active (Extended Functions) | r9722.0 | ✓ | --- | ✓ |
| SDI+ active | r9722.12 | ✓ | --- | ✓ |
| SDI+ deselect | r9720.12 | ✓ | ✓ | --- |
| SDI- active | r9722.13 | ✓ | --- | ✓ |
| Deselect SDI | r9720.13 | ✓ | ✓ | --- |
| "Standard" acknowledgment | p2103 | --- | --- | --- |

| Inverter signal | Parameter | Included in the PROFIsafe telegram | Can be interconnected with | |
|---|---|---|---|---|
| | | | F-DI | F-DO |
| Failsafe acknowledgment | r9720.7 | ✓ | ✓ | --- |
| ON/OFF1 | r0054.0 | --- | --- | --- |

## Deselecting SDI after a discrepancy

### Procedure

1. Remove the discrepancy.
2. Acknowledge the discrepancy message with the failsafe acknowledge signal via a failsafe digital input: F-DI = 0 → 1 → 0.
   Alternatively, you can acknowledge the message in one of the following ways. However, the drive stops in these cases:
   – Select the STO function and then deselect again: F-DI = 1 → 0 → 1.
   – Select the SS1 function and then deselect again: F-DI = 1 → 0 → 1.
   – Switch off the inverter power supply and switch it on again.
3. Acknowledge the inverter with the "standard" acknowledge signal.

You have acknowledged the discrepancy message and deselected SDI.
❒

## 6.8.6 Limit value violation when Safe Direction (SDI) is active

### Drive response

When motion monitoring detects a fault when SDI is active, the inverter responds by triggering a STOP A or STOP B. The inverter response is parameterized during commissioning.

Stop responses (Page 255)

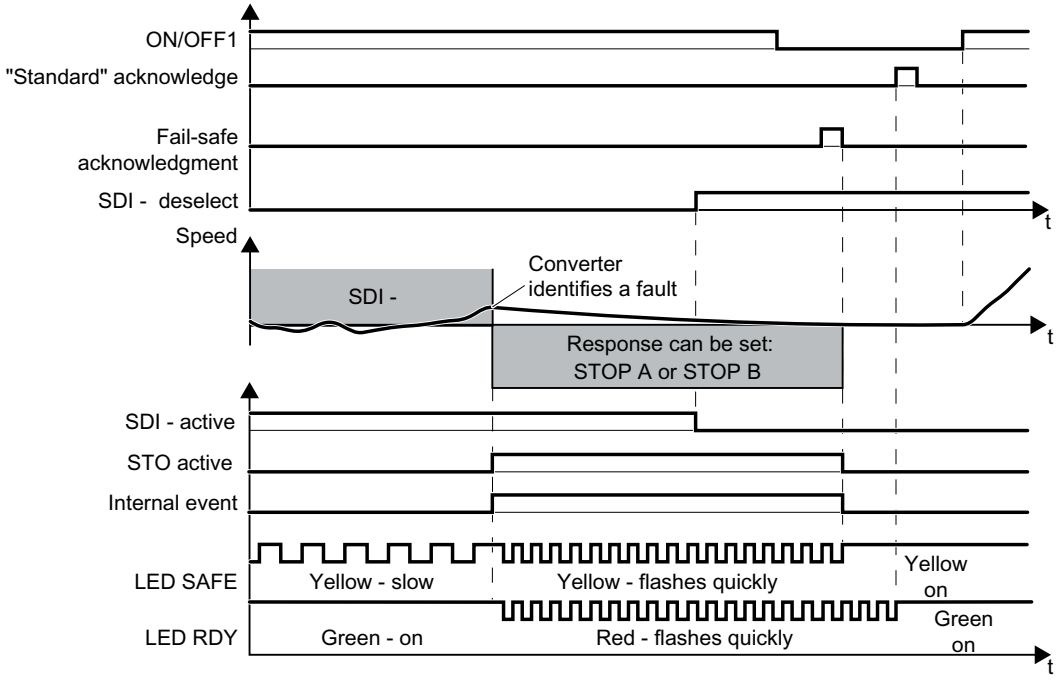


Figure 6-48 Limit value violation of safety function SDI. Example with STOP A as fault response

| Inverter signal | Parameter | Included in the PROFIsafe telegram | Can be interconnected with | |
|---|---|---|---|---|
| | | | F-DI | F-DO |
| Internal event | r9722.7 | ✓ | --- | ✓ |
| STO active (Extended Functions) | r9722.0 | ✓ | --- | ✓ |
| SDI+ active | r9722.12 | ✓ | --- | ✓ |
| SDI+ deselect | r9720.12 | ✓ | ✓ | --- |
| SDI- active | r9722.13 | ✓ | --- | ✓ |
| Deselect SDI | r9720.13 | ✓ | ✓ | --- |
| "Standard" acknowledgment | p2103 | --- | --- | --- |
| Failsafe acknowledgment | r9720.7 | ✓ | ✓ | --- |
| ON/OFF1 | r0054.0 | --- | --- | --- |

## Switching the motor on after an internal event

### Procedure

1. Deselect the SDI function.
2. Issue an OFF1 command (ON/OFF1 = 0).
3. Acknowledge the internal event in one of the following ways:
   - Failsafe acknowledgment using PROFIsafe control word 0, bit 7 = 0 → 1 → 0.
   - Failsafe acknowledge signal via a failsafe digital input: F-DI = 0 → 1 → 0.
   - Select the STO function and deselect again (PROFIsafe control word 0, bit 0 or F-DI: 1 → 0 → 1).
   - Select the SS1 function and deselect again (PROFIsafe control word 0, bit 1 or F-DI: 1 → 0 → 1).
   - Switch off the inverter power supply and switch it on again.
4. Acknowledge the inverter with the "standard" acknowledge signal.
5. Switch on the motor (ON/OFF1 = 1).

You have acknowledged the internal event and switched on the motor again.
❐

# 6.9 Response to a discrepancy in the signals transferred via PROFIsafe

## Drive response

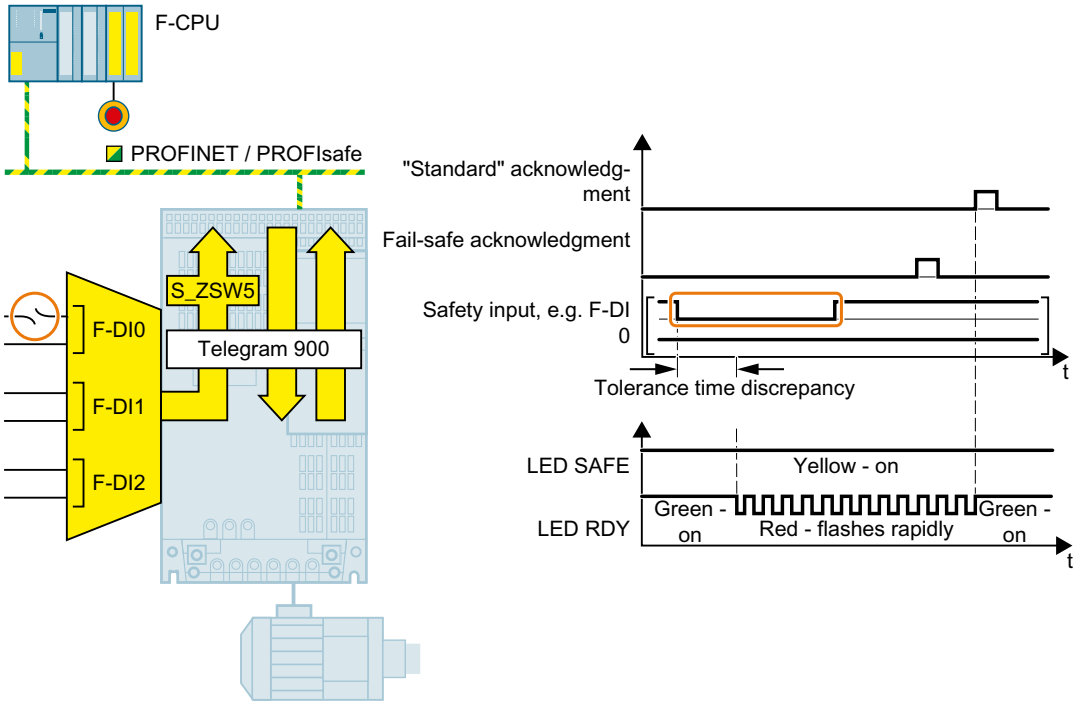


Figure 6-49 Behavior of the inverter in the event of a discrepancy in a failsafe digital input in PROFIsafe telegram 900

The inverter does not set the error bit of the safety functions (= internal event).

After the tolerance time has expired, the inverter signals the discrepancy (fault C01770 or C30770).

Independent of the voltage levels available, the inverter sets the evaluation of the discrepant failsafe digital input into the safe state (= zero) until you acknowledge the inverter using a failsafe signal or you switch off the power supply voltage and switch it on again.

| Inverter signal | Parameter | Included in the PROFI-safe telegram | Can be interconnec-ted with | |
|---|---|---|---|---|
| | | | F-DI | F-DO |
| Internal event | r9722.7 | ✓ | --- | ✓ |
| "Standard" acknowledgment | p2103 | --- | --- | --- |
| Failsafe acknowledgment | r9720.7 | ✓ | ✓ | --- |

## Acknowledging a discrepancy message

### Procedure

1. Remove the discrepancy.
2. Acknowledge the discrepancy message in one of the following ways:

| Selected setting | How can the internal event be acknowledged? | | |
|---|---|---|---|
| | F-DI | PROFIsafe | Alternative |
| Extended Functions via PROFIsafe | --- | Select and deselect STO (PROFIsafe control word 1, bit 0 = 1 → 0 → 1)<br>or<br>Select and deselect SS1 (PROFIsafe control word 1, bit 1 = 1 → 0 → 1)<br>or<br>Failsafe acknowledgment (PROFIsafe control word 1, bit 7 = 0 → 1 → 0) | Switch off the power supply voltage and switch on again |
| Extended Functions via PROFIsafe and Basic Functions via onboard terminals | Select and deselect STO (F-DI = 1 → 0 → 1) | Select and deselect STO (PROFIsafe control word 1, bit 0 = 1 → 0 → 1)<br>or<br>Select and deselect SS1 (PROFIsafe control word 1, bit 1 = 1 → 0 → 1)<br>or<br>Failsafe acknowledgment (PROFIsafe control word 1, bit 7 = 0 → 1 → 0) | Switch off the power supply voltage and switch on again |

3. Acknowledge the inverter with the "standard" acknowledge signal.

You have acknowledged the discrepancy message.
❒

# 6.10 Stop responses

## Internal event

An "internal event" is a major fault that causes the inverter to bring the motor to a standstill as quickly as possible by triggering a STOP reaction. For example, an "internal event" can be caused by one of the following:

- The inverter detects an internal fault in its hardware or its firmware on the basis of a data cross-check (F01611).
- The inverter identifies when a limit value is violated as a result of an inadmissible motor speed (C01714).

An "internal event" can only be acknowledged using a fail-safe signal.

Fail-safe acknowledgment (Page 260)

## STOP A

For a STOP A, the inverter safely switches off the torque of the connected motor immediately.

## STOP B

For a STOP B, the inverter brakes the motor with the OFF3 ramp-down time until standstill is detected. This is then followed by a STOP A.

If you operate the motor with torque control, then the inverter switches over the control mode to speed control.

The inverter monitors the braking of the motor. The type of monitoring corresponds to the monitoring mode of SS1.

Setting SS1 (Page 146)

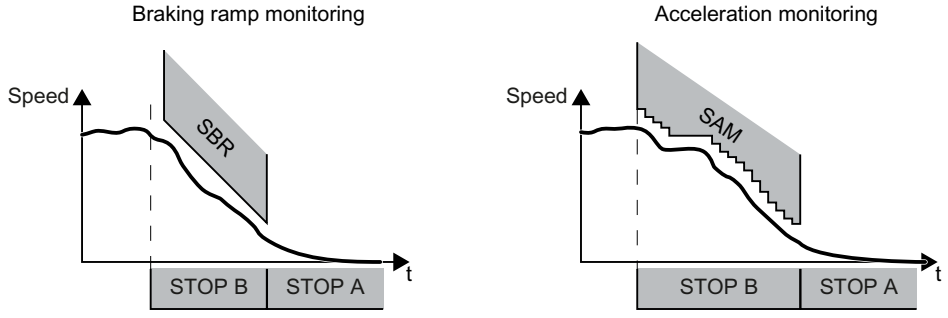


Figure 6-50 Speed monitoring for a STOP B

If the motor does not follow the defined braking ramp, the inverter interrupts the braking of the motor and responds with a STOP A.

## STOP F

If a safety function is active [1], a STOP F initiates a STOP A or STOP B:

- Fault F01611 immediately initiates a STOP A.
- For message C01711, the inverter response depends on the active safety function:
  - When STO is active, then the inverter initiates a STOP A.
  - In all other cases, the inverter initiates a STOP B.

If none of the safety functions are active, then the inverter responds as follows:

- Fault F01611 immediately initiates a STOP A.
- There is no immediate stop response for message C01711. However, the message is kept. When selecting a safety function, the inverter responds with a stop as described above.

[1] The SSM function is considered as active safety function if the SSM filter and the SSM hysteresis have been enabled.

## 6.10.1 Example 1: Internal event with STO active

### Drive response

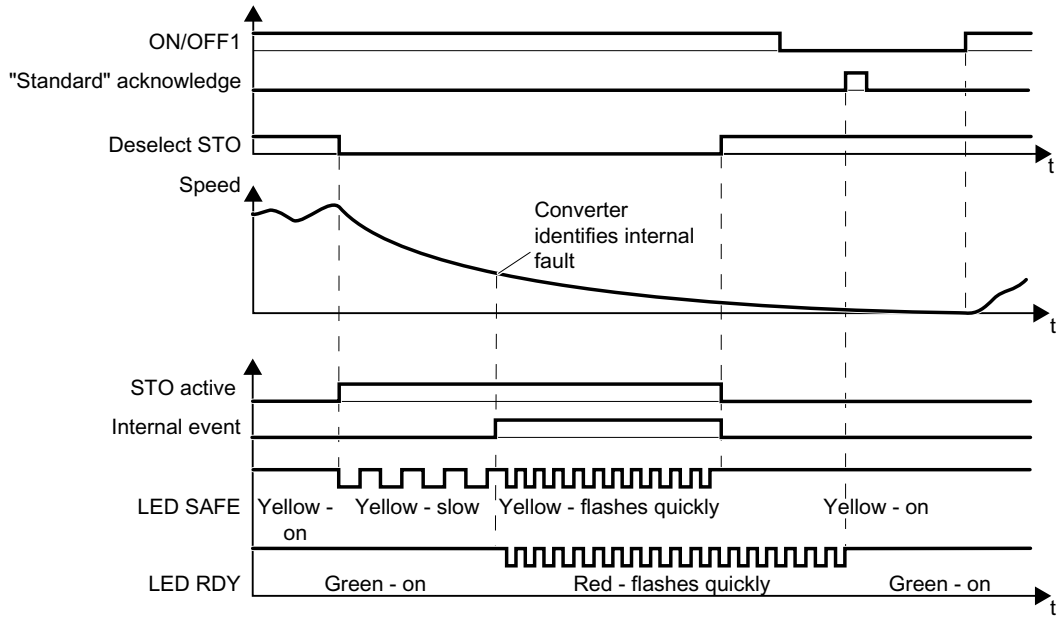


Figure 6-51 Internal event when the STO safety function is active

The inverter signals an internal event.

| Inverter signal | Parameter | Included in the PROFIsafe telegram | Can be interconnected with | |
|---|---|---|---|---|
| | | | F-DI | F-DO |
| Internal event | r9722.7 | ✓ | --- | ✓ |
| STO active (Extended Functions) | r9722.0 | ✓ | --- | ✓ |
| Deselect STO (Extended Functions) | r9720.0 | ✓ | ✓ | --- |
| "Standard" acknowledgment | p2103 | --- | --- | --- |
| ON/OFF1 | r0054.0 | --- | --- | --- |

### Switching the motor on after an internal event

#### Procedure

1. Deselect the STO function.
2. Issue an OFF1 command (ON/OFF1 = 0).
3. Acknowledge the inverter with the "standard" acknowledge signal.
4. Switch on the motor (ON/OFF1 = 1).

You have acknowledged the internal event and switched on the motor again.
❐

## 6.10.2 Example 2: Internal event with SSM active

### Internal event when the motion monitoring function is active

If an active safety function with motion monitoring (SS1, SSL, SDI or SSM) is interrupted with an internal event, the inverter responds with a STOP F.

A STOP F does not unconditionally stop the motor.

Stop responses (Page 255)

### The drive response

The motor behavior is explained using the SSM function and a STOP B with acceleration monitoring as an example:

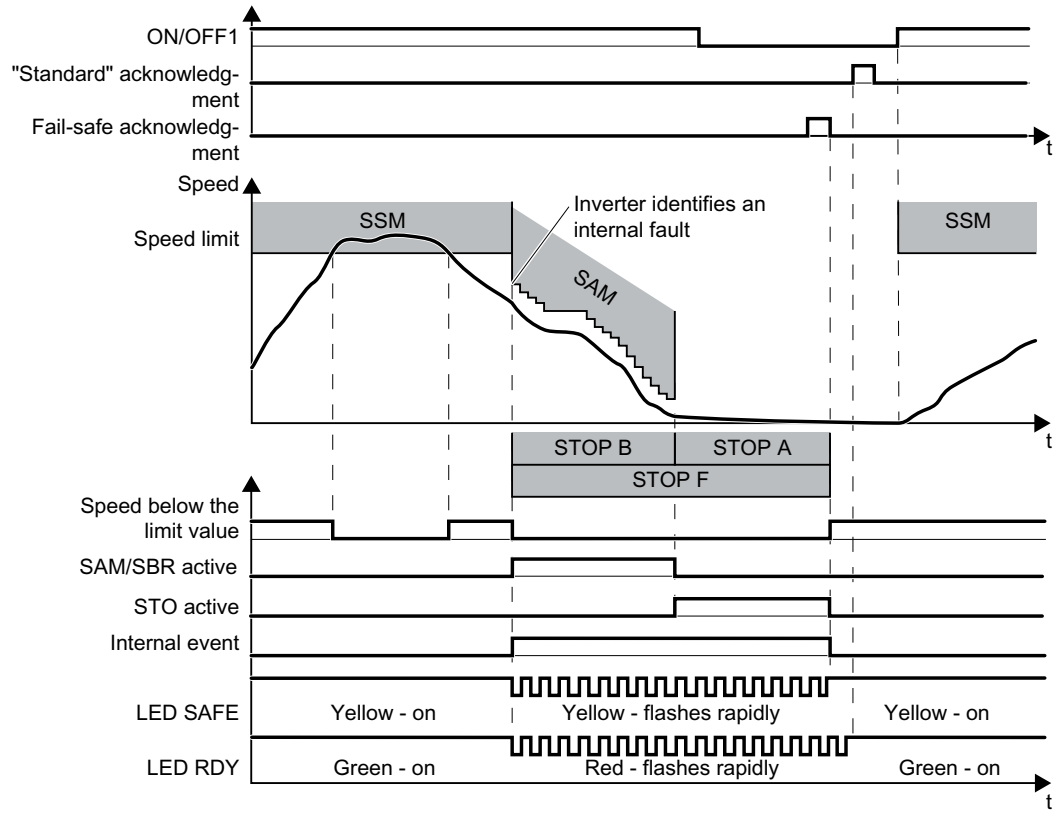


Figure 6-52 Response of the SSM safety function to an internal event

| Inverter signal | Parameter | Included in the PROFI-safe telegram | Can be interconnected with | |
|---|---|---|---|---|
| | | | F-DI | F-DO |
| Internal event | r9722.7 | ✓ | --- | ✓ |
| STO active (Extended Functions) | r9722.0 | ✓ | --- | ✓ |
| SSM feedback signal active (speed below limit value) | r9722.15 | ✓ | --- | ✓ |

| Inverter signal | Parameter | Included in the PROFIsafe telegram | Can be interconnected with | |
|---|---|---|---|---|
| | | | F-DI | F-DO |
| SAM/SBR active | r9723.16 | --- | --- | --- |
| "Standard" acknowledgment | p2103 | --- | --- | --- |
| Failsafe acknowledgment | r9720.7 | ✓ | ✓ | --- |
| ON/OFF1 | r0054.0 | --- | --- | --- |

## Switching the motor on after an internal event

### Procedure

1. Issue an OFF1 command (ON/OFF1 = 0).
2. Acknowledge the internal event in one of the following ways:
   - Failsafe acknowledgment using PROFIsafe control word 0, bit 7 = 0 → 1 → 0.
   - Failsafe acknowledge signal via a failsafe digital input: F-DI = 0 → 1 → 0.
   - Select the STO function and deselect again (PROFIsafe control word 0, bit 0 or F-DI: 1 → 0 → 1).
   - Select the SS1 function and deselect again (PROFIsafe control word 0, bit 1 or F-DI: 1 → 0 → 1).
   - Switch off the inverter power supply and switch it on again.
3. Acknowledge the inverter with the "standard" acknowledge signal.
4. Switch on the motor (ON/OFF1 = 1).
   Switching on the motor when SSM is active (Page 239)

You have acknowledged the internal event and switched on the motor again.
❐

# 6.11 Fail-safe acknowledgment

## 6.11.1 Acknowledging using a fail-safe signal

You must acknowledge the majority of safety function faults using a failsafe signal. The following options are available.

- Acknowledging via a failsafe digital input
- Acknowledging via PROFIsafe
- Acknowledging by selecting and deselecting STO
- Acknowledging by switching the power supply voltage on and off

### Acknowledging via a failsafe digital input

**Procedure**

1. Acknowledge the fault with F-DI = 0 → 1 → 0.
2. Then, acknowledge the inverter with the "standard" acknowledgement signal.

You have acknowledged the inverter in a failsafe fashion.
❒

### Acknowledging via PROFIsafe

**Procedure**

1. Acknowledge the fault with bit 7 of the control word 0: Bit 7 = 0 → 1 → 0.
2. Then, acknowledge the inverter with the "standard" acknowledgement signal.

You have acknowledged the inverter in a failsafe fashion.
❒

### Acknowledging by selecting and deselecting STO

**Procedure**

1. Select the safety function STO or SS1 and then deselect again:
   - F-DI = 1 → 0 → 1
     or
   - PROFIsafe control word 1, bit 0 or 1 = 1 → 0 → 1
2. Then, acknowledge the inverter with the "standard" acknowledgement signal.

You have acknowledged the inverter in a failsafe fashion.
❒

### Acknowledging by switching the power supply on and off

You can acknowledge faults by temporarily shutting off the power supply voltage of the inverter and then switching it on again.

## 6.11.2 Response to a discrepancy of the fail-safe acknowledge signal

### Drive response

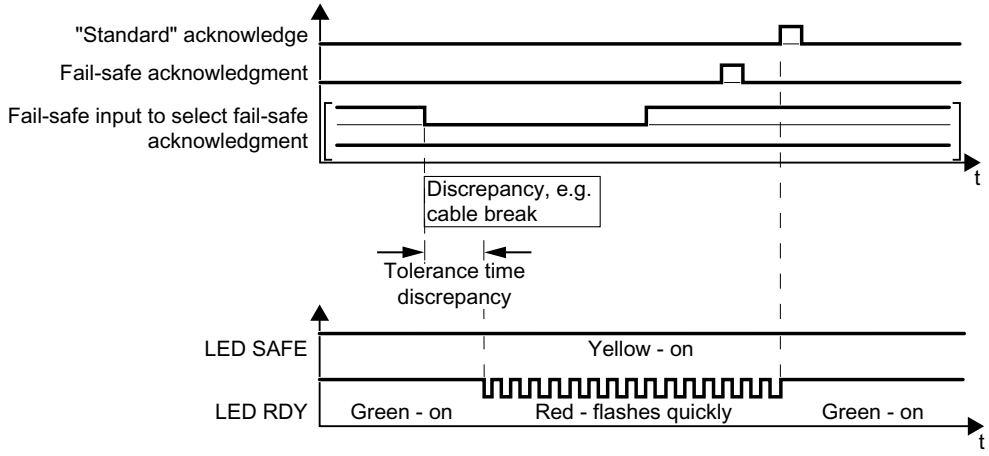


Figure 6-53 Behavior of the inverter for discrepancy of the input signal for failsafe acknowledgment

The inverter does not set the error bit of the safety functions (= internal event).

After the tolerance time has expired, the inverter signals the discrepancy (fault C01770 or C30770).

Independent of the voltage levels available, the inverter sets the evaluation of the discrepant F-DI into the safe state (= zero) until you acknowledge the inverter using a failsafe signal or you switch off the power supply voltage and switch it on again.

| Inverter signal | Parameter | Included in the PROFI-safe telegram | Can be interconnec-ted with | |
|---|---|---|---|---|
| | | | F-DI | F-DO |
| "Standard" acknowledgment | p2103 | --- | --- | --- |
| Failsafe acknowledgment | r9720.7 | ✓ | ✓ | --- |

### Acknowledging a discrepancy message

#### Procedure

1. Remove the discrepancy.
2. Acknowledge the discrepancy message in one of the following ways:
   – Select the STO function and then deselect again: F-DI = 1 → 0 → 1.
   – Select the SS1 function and then deselect again: F-DI = 1 → 0 → 1.
   – Switch off the inverter power supply and switch it on again.
3. Acknowledge the inverter with the "standard" acknowledge signal.

You have acknowledged the discrepancy message.
❒

## 6.12 Selecting safety function when a safety function is active

The table below lists the notes regarding the behavior of your drive if you select more than one safety function at the same time.

Some cases do not affect the behavior of your drive. If, for example, the safety function STO is active, the motor torque remains switched off regardless of which inverter function you also select.

Table 6-11 Interaction between two safety functions

| | Select STO | Select SS1 | Select SLS | Select SDI |
|---|---|---|---|---|
| STO is active | --- | No effect | No effect | No effect |
| SS1 is active | (Page 264) | --- | No effect [1] | No effect [1] |
| SLS is active | (Page 265) | (Page 269) | --- | (Page 275) |
| SDI is active | (Page 266) | (Page 270) | (Page 273) | --- |
| SSM is active | (Page 267) | (Page 271) | (Page 274) | (Page 276) |

[1] Exception: When SS1 is active and the following conditions are simultaneously satisfied, the inverter initiates a STOP A:

- The motor speed exceeds the SLS limit or exits the SDI tolerance window
- STOP A is set as fault response for SLS or SDI

### 6.12.1 Selecting STO when SS1 is active

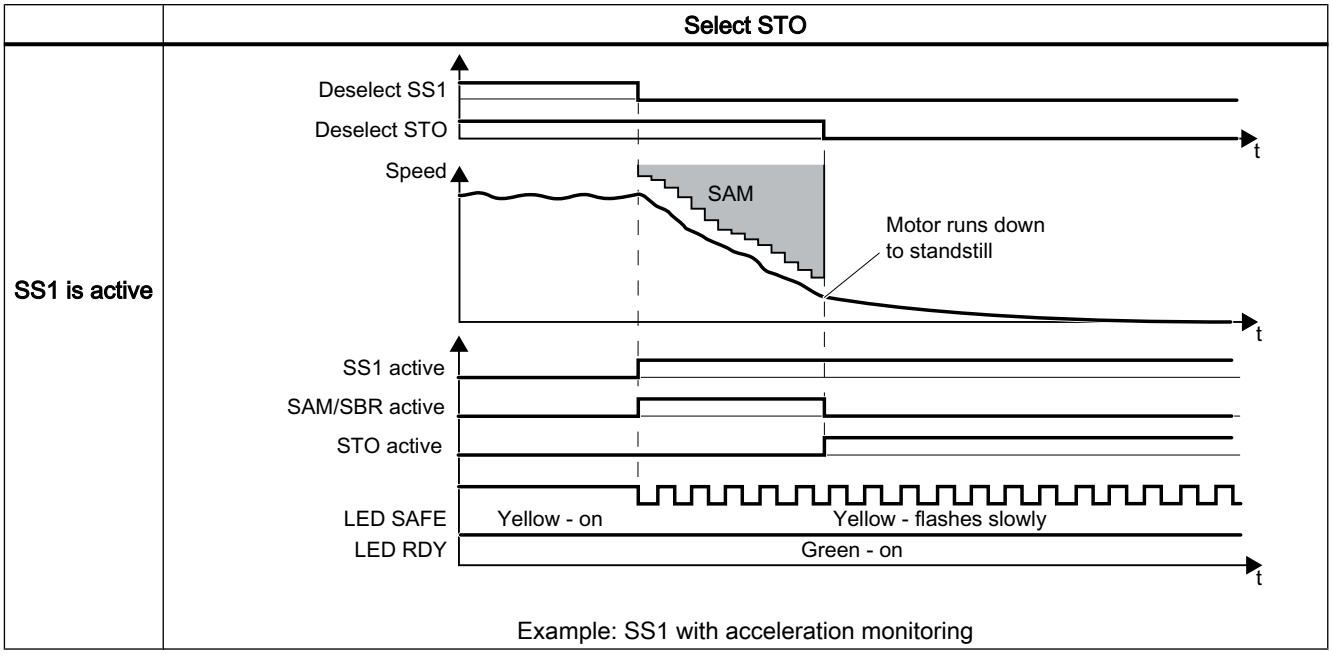


| Inverter signals | Parameters | Included in the PROFI-safe telegram | Can be interconnected with | |
|---|---|---|---|---|
| | | | F-DI | F-DO |
| STO active (basic functions) | r9773.1 | ✓ | --- | ✓ |
| STO deselection (basic functions) | r9773.0 | ✓ | ✓ | --- |
| STO cause, selection via terminal on the Power Module | r9772.25 | --- | --- | --- |
| STO active (extended functions) | r9722.0 | ✓ | --- | ✓ |
| Deselect STO (extended functions) | r9720.0 | ✓ | ✓ | --- |
| SS1 active (extended functions) | r9722.1 | ✓ | --- | ✓ |
| Deselect SS1 (extended functions) | r9720.1 | ✓ | ✓ | --- |
| SAM/SBR active | r9723.16 | --- | --- | --- |
| ON/OFF1 | r0054.0 | --- | --- | --- |

## 6.12.2 Selecting STO when SLS is active

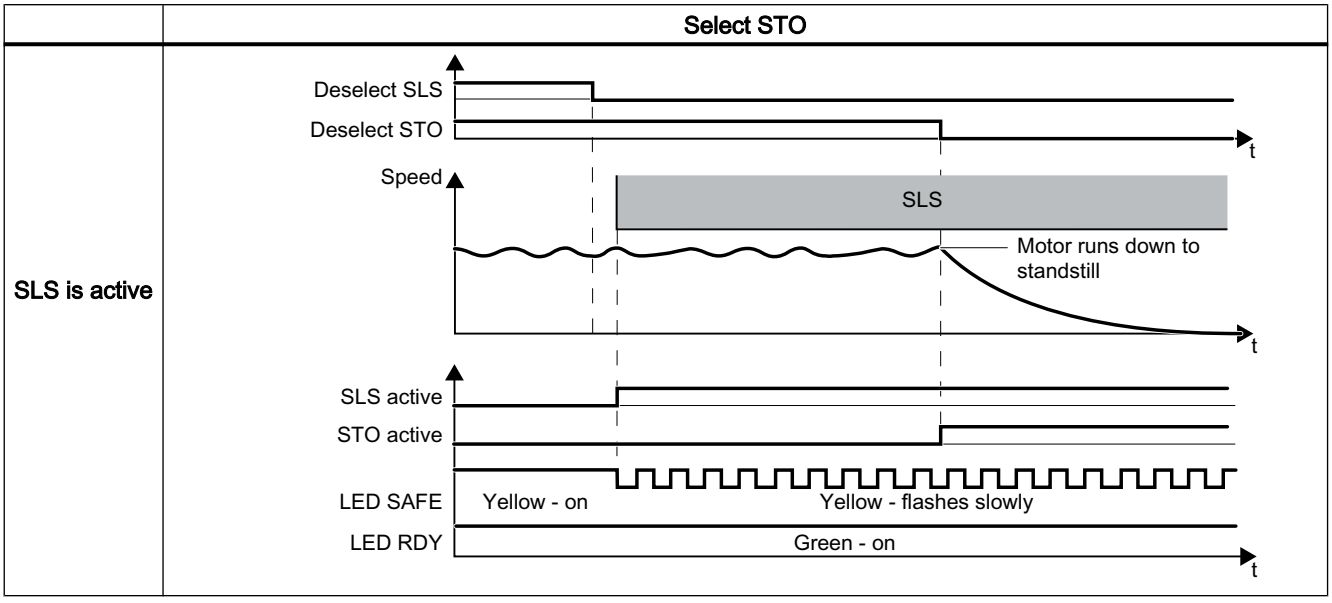


| Inverter signals | Parameters | Included in the PROFIsafe telegram | Can be interconnected with | |
|---|---|---|---|---|
| | | | F-DI | F-DO |
| STO active (basic functions) | r9773.1 | ✓ | --- | ✓ |
| STO deselection (basic functions) | r9773.0 | ✓ | ✓ | --- |
| STO cause, selection via terminal on the Power Module | r9772.25 | --- | --- | --- |
| STO active (extended functions) | r9722.0 | ✓ | --- | ✓ |
| Deselect STO (extended functions) | r9720.0 | ✓ | ✓ | --- |
| SLS active | r9722.4 | ✓ | --- | ✓ |
| Deselect SLS | r9720.4 | ✓ | ✓ | --- |

### 6.12.3 Selecting STO when SDI is active

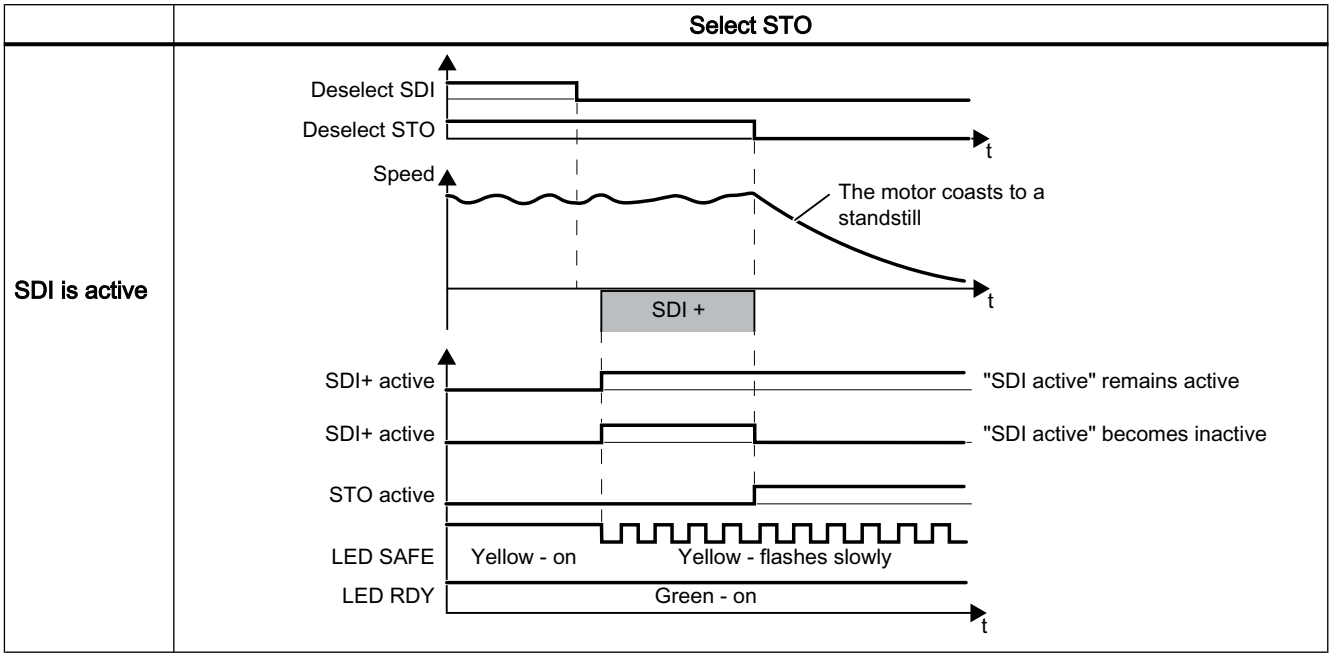


| Inverter signals | Parameter | Included in the PROFI-safe telegram | Can be interconnected with | |
|---|---|---|---|---|
| | | | F-DI | F-DO |
| STO active (basic functions) | r9773.1 | ✓ | --- | ✓ |
| STO deselection (basic functions) | r9773.0 | ✓ | ✓ | --- |
| STO cause, selection via terminal on the Power Module | r9772.25 | --- | --- | --- |
| STO active (extended functions) | r9722.0 | ✓ | --- | ✓ |
| Deselect STO (extended functions) | r9720.0 | ✓ | ✓ | --- |
| SDI+ active | r9722.12 | ✓ | --- | ✓ |
| SDI+ deselect | r9720.12 | ✓ | ✓ | --- |
| SDI- active | r9722.13 | ✓ | --- | ✓ |
| Deselect SDI- | r9720.13 | ✓ | ✓ | --- |

### 6.12.4 Selecting STO when SSM is active

| | Select STO |
|---|---|
| SSM is active | 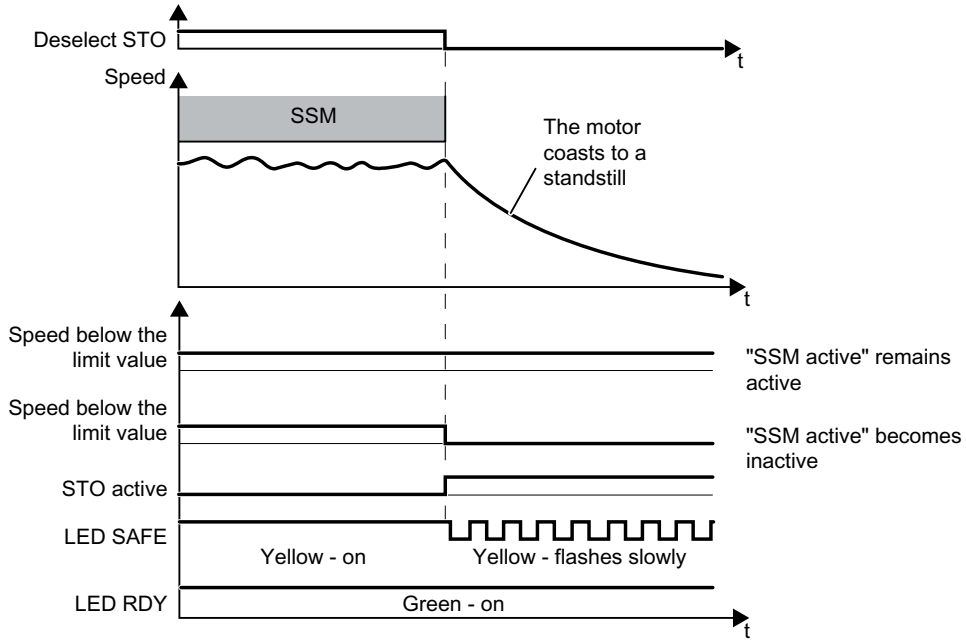 <br>Example for speed < SSM monitoring speed |

| | Select STO |
|---|---|
| SSM is active | 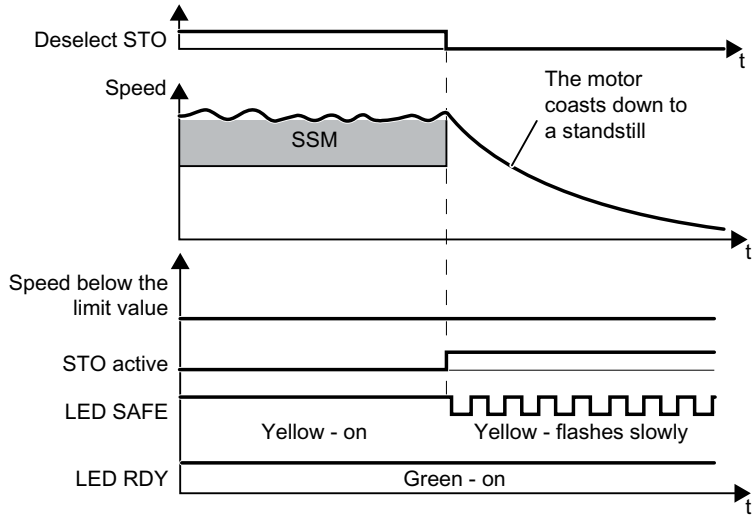 <br>Example for speed > SSM monitoring speed |

| Inverter signals | Parameter | Included in the PROFI-safe telegram | Can be interconnected with | |
|---|---|---|---|---|
| | | | F-DI | F-DO |
| STO active (basic functions) | r9773.1 | ✓ | --- | ✓ |
| STO deselection (basic functions) | r9773.0 | ✓ | ✓ | --- |
| STO cause, selection via terminal on the Power Module | r9772.25 | --- | --- | --- |
| STO active (extended functions) | r9722.0 | ✓ | --- | ✓ |
| Deselect STO (extended functions) | r9720.0 | ✓ | ✓ | --- |
| SSM feedback signal active (speed below limit value) | r9722.15 | ✓ | --- | ✓ |

### 6.12.5 Selecting SS1 when SLS is active

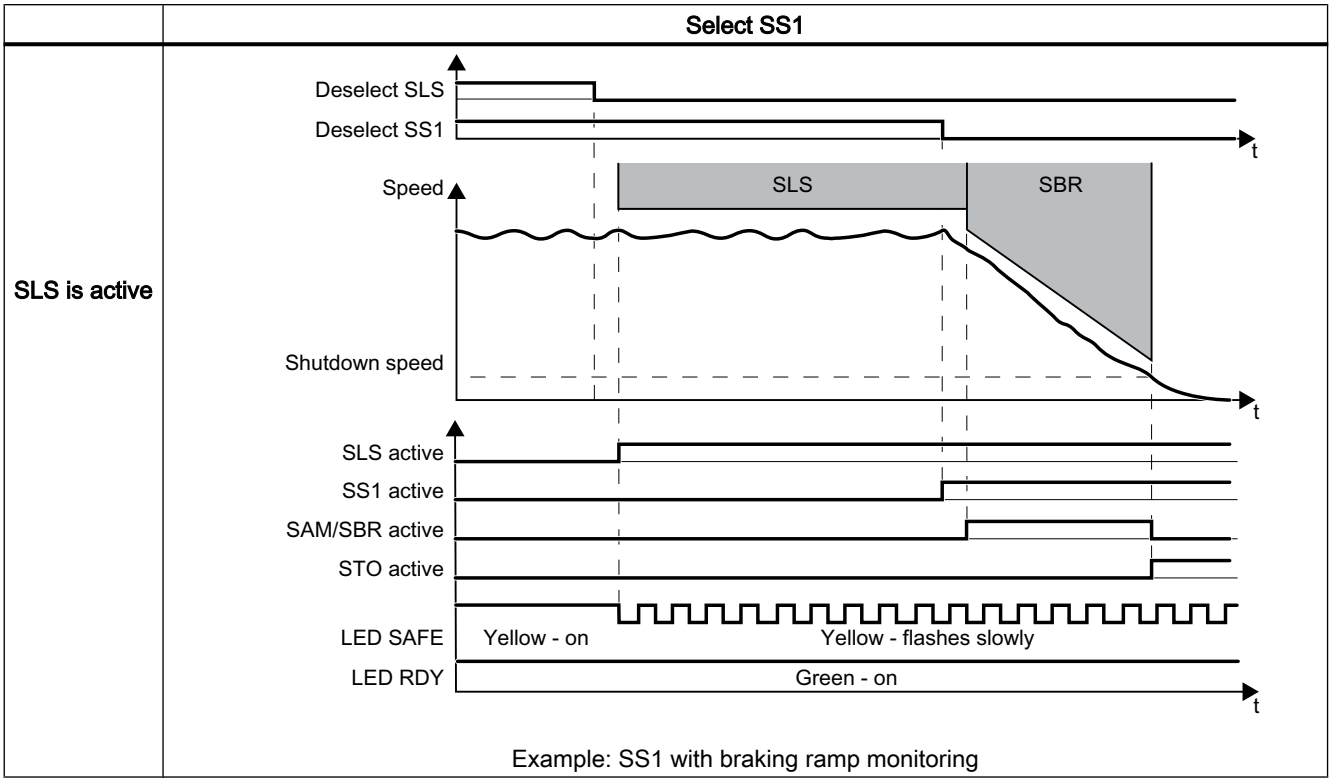


| Inverter signals | Parameter | Included in the PROFIsafe telegram | Can be interconnected with | |
|---|---|---|---|---|
| | | | F-DI | F-DO |
| STO active (extended functions) | r9722.0 | ✓ | --- | ✓ |
| SS1 active (basic functions) | r9773.6 | ✓ | --- | ✓ |
| Deselect SS1 (basic functions) | r9773.5 | ✓ | ✓ | --- |
| SS1 active (extended functions) | r9722.1 | ✓ | --- | ✓ |
| Deselect SS1 (extended functions) | r9720.1 | ✓ | ✓ | --- |
| SLS active | r9722.4 | ✓ | --- | ✓ |
| Deselect SLS | r9720.4 | ✓ | ✓ | --- |
| SAM/SBR active | r9723.16 | --- | --- | --- |

## 6.12.6 Selecting SS1 when SDI is active

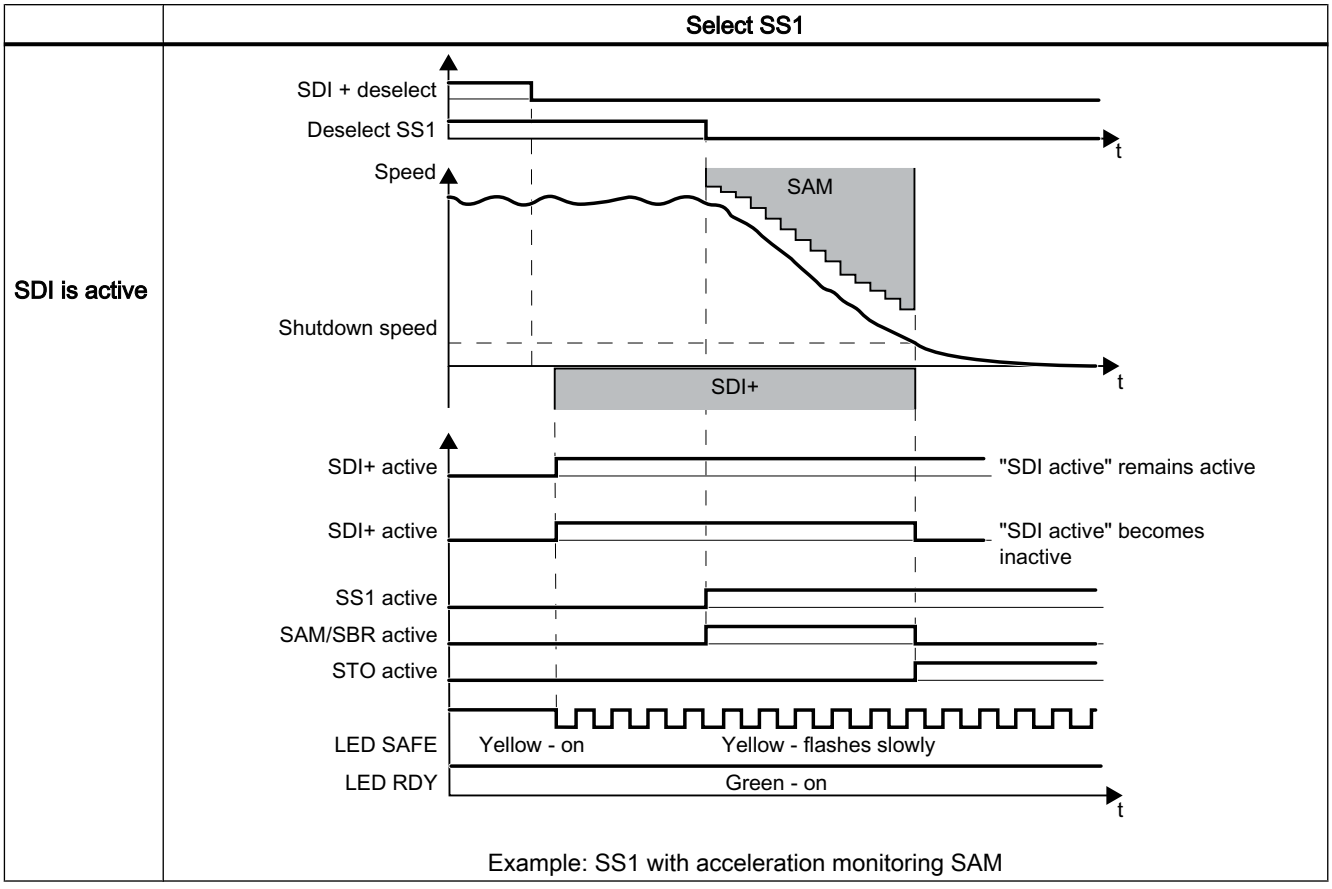


| Inverter signals | Parameter | Included in the PROFI-safe telegram | Can be interconnected with | |
|---|---|---|---|---|
| | | | F-DI | F-DO |
| STO active (extended functions) | r9722.0 | ✓ | --- | ✓ |
| SS1 active (basic functions) | r9773.6 | ✓ | --- | ✓ |
| Deselect SS1 (basic functions) | r9773.5 | ✓ | ✓ | --- |
| SS1 active (extended functions) | r9722.1 | ✓ | --- | ✓ |
| Deselect SS1 (extended functions) | r9720.1 | ✓ | ✓ | --- |
| SDI+ active | r9722.12 | ✓ | --- | ✓ |
| SDI+ deselect | r9720.12 | ✓ | ✓ | --- |
| SDI- active | r9722.13 | ✓ | --- | ✓ |
| Deselect SDI- | r9720.13 | ✓ | ✓ | --- |
| SAM/SBR active | r9723.16 | --- | --- | --- |

## 6.12.7 Selecting SS1 when SSM is active

| | Select SS1 |
|---|---|
| **SSM is active** | 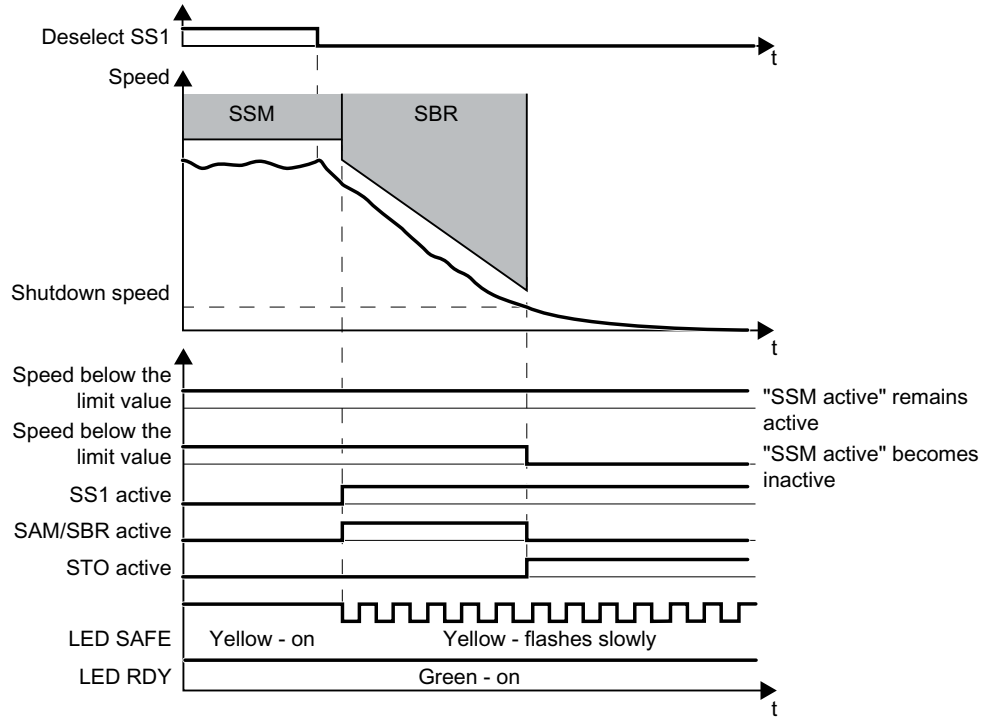 <br>Example: SS1 with brake ramp monitoring < SSM monitoring speed |

| | Select SS1 |
|---|---|
| **SSM is active** | 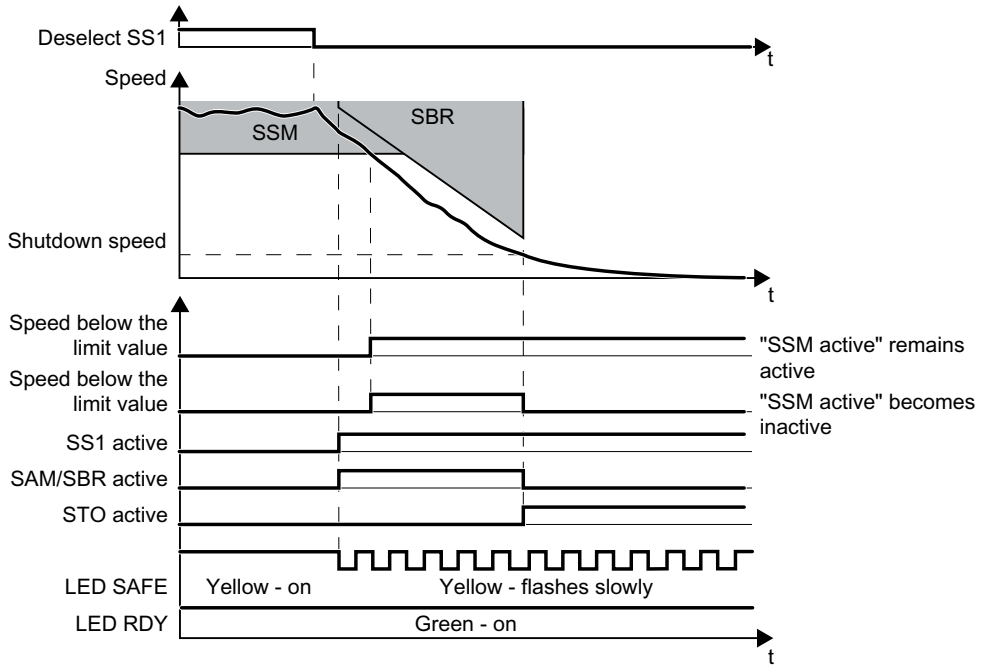 <br>Example: SS1 with brake ramp monitoring, speed < SSM monitoring speed |

| Inverter signals | Parameter | Included in the PROFIsafe telegram | Can be interconnected with | |
|---|---|---|---|---|
| | | | F-DI | F-DO |
| STO active (extended functions) | r9722.0 | ✓ | --- | ✓ |
| SS1 active (basic functions) | r9773.6 | ✓ | --- | ✓ |
| Deselect SS1 (basic functions) | r9773.5 | ✓ | ✓ | --- |
| SS1 active (extended functions) | r9722.1 | ✓ | --- | ✓ |
| Deselect SS1 (extended functions) | r9720.1 | ✓ | ✓ | --- |
| SSM feedback signal active (speed below limit value) | r9722.15 | ✓ | --- | ✓ |
| SAM/SBR active | r9723.16 | --- | --- | --- |

### 6.12.8 Selecting SLS when SDI is active

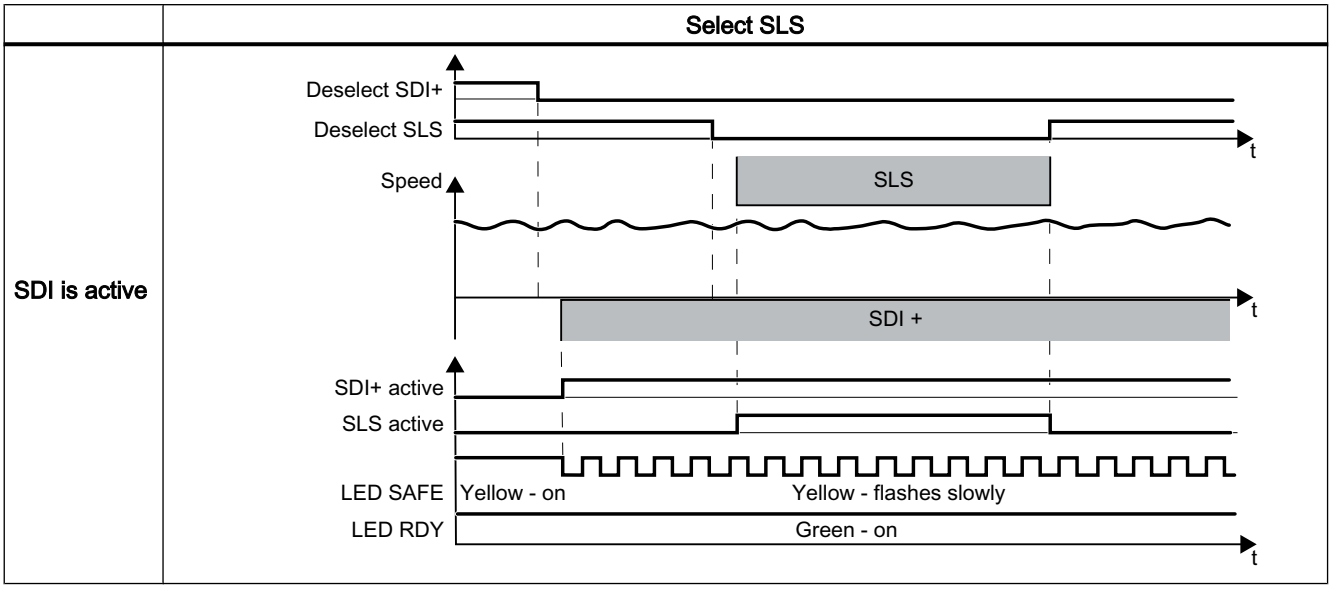


| Inverter signals | Parameter | Included in the PROFIsafe telegram | Can be interconnected with | |
|---|---|---|---|---|
| | | | F-DI | F-DO |
| SLS active | r9722.4 | ✓ | --- | ✓ |
| Deselect SLS | r9720.4 | ✓ | ✓ | --- |
| SSM feedback signal active (speed below limit value) | r9722.15 | ✓ | --- | ✓ |
| SDI+ active | r9722.12 | ✓ | --- | ✓ |
| SDI+ deselect | r9720.12 | ✓ | ✓ | --- |
| SDI- active | r9722.13 | ✓ | --- | ✓ |
| Deselect SDI- | r9720.13 | ✓ | ✓ | --- |

## 6.12.9 Selecting SLS when SSM is active

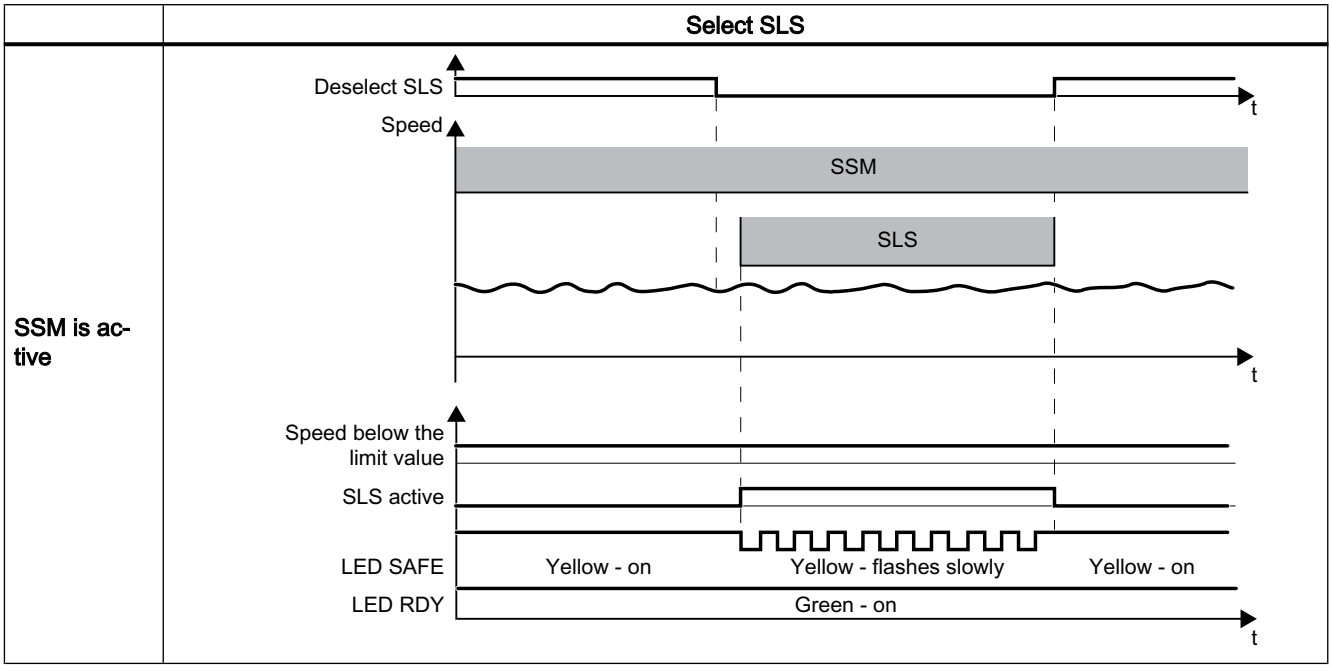


| Inverter signals | Parameter | Included in the PROFIsafe telegram | Can be interconnected with | |
|---|---|---|---|---|
| | | | F-DI | F-DO |
| SLS active | r9722.4 | ✓ | --- | ✓ |
| Deselect SLS | r9720.4 | ✓ | ✓ | --- |
| SSM feedback signal active (speed below limit value) | r9722.15 | ✓ | --- | ✓ |

### 6.12.10 Selecting SDI when SLS is active

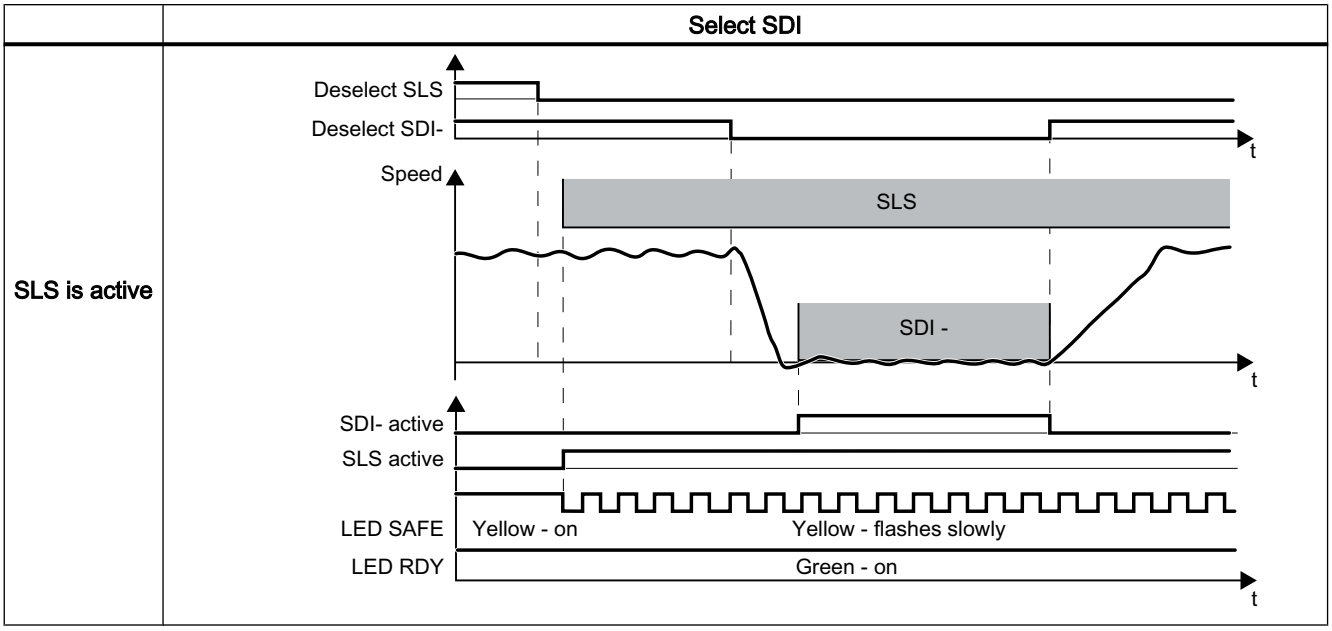


| Inverter signals | Parameter | Included in the PROFIsafe telegram | Can be interconnected with | |
|---|---|---|---|---|
| | | | F-DI | F-DO |
| SLS active | r9722.4 | ✓ | --- | ✓ |
| Deselect SLS | r9720.4 | ✓ | ✓ | --- |
| SDI+ active | r9722.12 | ✓ | --- | ✓ |
| SDI+ deselect | r9720.12 | ✓ | ✓ | --- |
| SDI- active | r9722.13 | ✓ | --- | ✓ |
| Deselect SDI- | r9720.13 | ✓ | ✓ | --- |

### 6.12.11 Selecting SDI when SSM is active

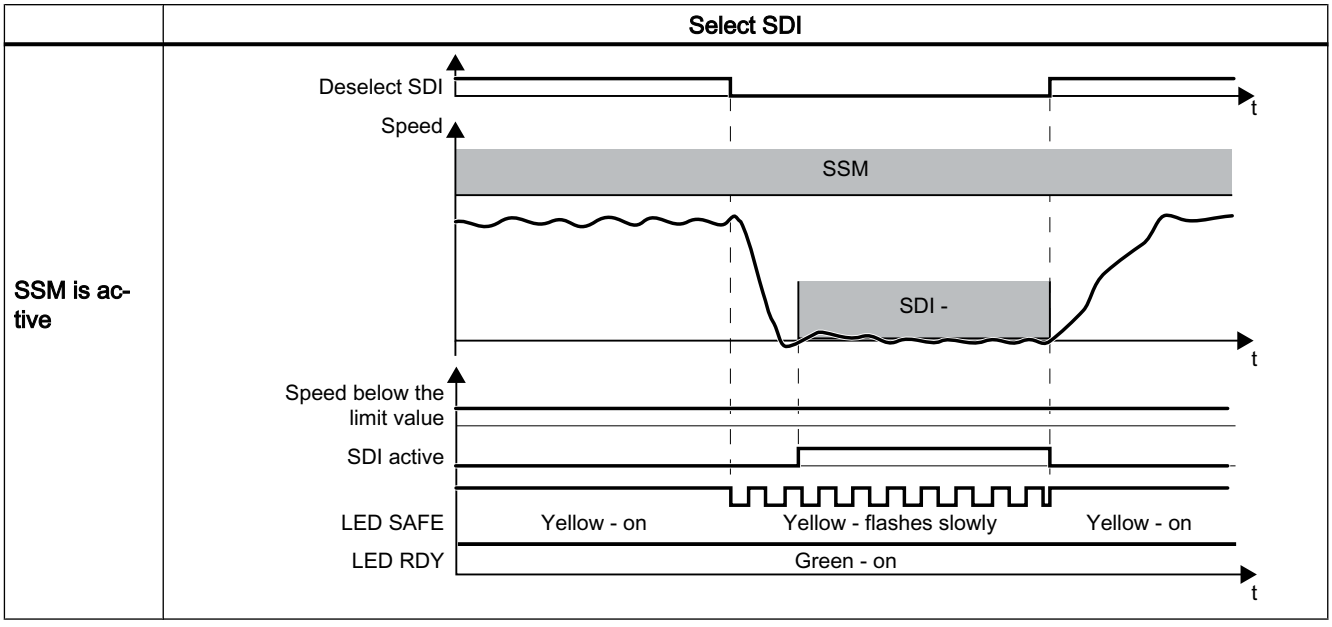


| Inverter signals | Parameter | Included in the PROFIsafe telegram | Can be interconnected with | |
|---|---|---|---|---|
| | | | F-DI | F-DO |
| SSM feedback signal active (speed below limit value) | r9722.15 | ✓ | --- | ✓ |
| SDI+ active | r9722.12 | ✓ | --- | ✓ |
| SDI+ deselect | r9720.12 | ✓ | ✓ | --- |
| SDI- active | r9722.13 | ✓ | --- | ✓ |
| Deselect SDI- | r9720.13 | ✓ | ✓ | --- |

## 6.13 Overview of the inverter signals relevant for operation

The following table lists the signals relevant for using the safety functions: Most of the signals are included in the PROFIsafe telegram, or can be interconnected using a fail-safe input or output.

| Inverter signals | Parameter | Included in the PROFIsafe telegram | Can be interconnected with | |
|---|---|---|---|---|
| | | | F-DI | F-DO |
| Internal event | r9722.7 | ✓ | --- | ✓ |
| STO active (basic functions) | r9773.1 | ✓ | --- | ✓ |
| STO deselection (basic functions) | r9773.0 | ✓ | ✓ | --- |
| STO cause, selection via terminal on the Power Module | r9772.25 | --- | --- | --- |
| STO active (extended functions) | r9722.0 | ✓ | --- | ✓ |
| Deselect STO (extended functions) | r9720.0 | ✓ | ✓ | --- |
| SBC requested (basic functions) | r9773.4 | --- | --- | --- |
| SS1 active (basic functions) | r9773.6 | ✓ | --- | ✓ |
| Deselect SS1 (basic functions) | r9773.5 | ✓ | ✓ | --- |
| SS1 active (extended functions) | r9722.1 | ✓ | --- | ✓ |
| Deselect SS1 (extended functions) | r9720.1 | ✓ | ✓ | --- |
| SLS active | r9722.4 | ✓ | --- | ✓ |
| Deselect SLS | r9720.4 | ✓ | ✓ | --- |
| SLS level active | r9722.9, r9722.10 | ✓ | --- | ✓ |
| Select SLS level | r9720.9, r9720.10 | ✓ | ✓ | --- |
| SSM feedback signal active (speed below limit value) | r9722.15 | ✓ | --- | ✓ |
| SDI+ active | r9722.12 | ✓ | --- | ✓ |
| SDI+ deselect | r9720.12 | ✓ | ✓ | --- |
| SDI- active | r9722.13 | ✓ | --- | ✓ |
| Deselect SDI- | r9720.13 | ✓ | ✓ | --- |
| SAM/SBR active | r9723.16 | --- | --- | --- |
| Forced checking procedure (test stop) of the STO terminals on the PM240-2 or PM240P-2 Power Module required | r9773.30 | --- | --- | --- |
| Forced checking procedure (test stop) required for the basic functions | r9773.31 | --- | --- | --- |
| Forced checking procedure (test stop) required for the extended functions | r9723.0 | --- | --- | --- |
| Forced checking procedure (test stop) required for the extended functions | p9705 | --- | --- | --- |
| Start forced checking procedure (test stop) of the fail-safe digital output | p10007 | --- | --- | --- |

| Inverter signals | Parameter | Included in the PROFIsafe telegram | Can be interconnected with | |
|---|---|---|---|---|
| | | | F-DI | F-DO |
| "Standard" acknowledgment | p2103 | --- | --- | --- |
| Fail-safe acknowledgment | r9720.7 | ✓ | ✓ | --- |
| Ready to switch on | r0052.0 | --- | --- | --- |
| ON/OFF1 | r0054.0 | --- | --- | --- |
| OFF2 | r0054.1 | --- | --- | --- |
| OFF3 | r0054.2 | --- | --- | --- |
| Release motor holding brake | r0899.12 | --- | --- | --- |
| Close motor holding brake | r0899.13 | --- | --- | --- |

## 6.14 List of alarms and faults

### Syntax for faults and alarms

| | |
|---|---|
| F12345 | Fault 12345 |
| A67890 | Alarm 67890 |
| C01700 | Message 1700 for safety functions |
| | Messages C ... are either alarms or faults. See the following table. |

## List of alarms and faults

The following table only contains the alarms and faults of the safety functions. The complete list of all alarms and faults of the inverter, detailed causes and remedial measures can be found in the List Manual.

| Signal | Cause | Remedy |
|---|---|---|
| | Complete information on the messages is available in the List Manual. | |
| F01600 | STOP A initiated.<br>Fault value r0949 provides more detailed information. | The remedy depends on the fault value. The complete list of the fault values is provided in the List Manual.<br>0: Stop request from processor 2.<br>1005: Pulses are canceled, although neither is STO selected nor an internal STOP A active.<br>Cause 1: Defective hardware. Remedy:<br>1. Select STO and then deselect again.<br>2. Switch off the power supply voltage of the inverter and switch on again.<br>3. Replace the Power Module if it cannot be acknowledged.<br>Cause 2: The "STO via Power Module terminals" function is selected, however the function is not enabled in the Control Unit (p9601.7 = p9801.7 = 0). Remedy:<br>1. Set both switches on the Power Module to the "OFF" setting, or enable the function in the Control Unit.<br>2. Acknowledge the inverter fail-safe.<br>3. Replace the Power Module if it cannot be acknowledged.<br>1010 … 1011: For details, please refer to the List Manual. Remedy:<br>1. Select STO and then deselect again.<br>2. Switch off the power supply voltage of the inverter and switch on again.<br>3. Replace the Power Module if it cannot be acknowledged.<br>1030: Discrepancy at terminals STO_A and STO_B on the PM240-2 or PM240P-2 Power Module. Remedy:<br>1. Remove the discrepancy at the terminals.<br>2. Acknowledge the inverter fail-safe.<br>3. Replace the Power Module if it cannot be acknowledged.<br>9999: Subsequent response to fault F01611. |

| Signal | Cause | Remedy |
|---|---|---|
| | **Complete information on the messages is available in the List Manual.** | |
| F01611 | Defect in a monitoring channel.<br>Fault value r0949 provides more detailed information. | The remedy depends on the fault value. The complete list of the fault values is provided in the List Manual.<br>0: Stop request from processor 2.<br>1 … 999: Fault in data cross-check between processor 1 and processor 2.<br>Details and remedy: Please refer to the List Manual.<br>1000: Check (watchdog) timer has expired.<br>When selecting a safety function, the signal changed too frequently.<br>The inverter monitors the signal to select a safety function after a signal change.<br>If the signal state continues to change in shorter intervals than entered in p9650, after the time 5 × p9650 the inverter outputs fault F1611:<br> 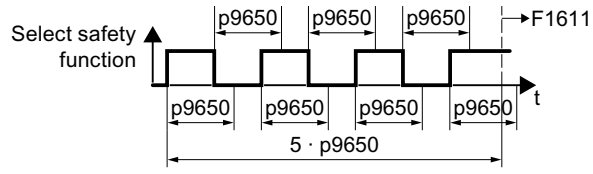 <br><br>Remedy:<br>• Check the F-DI wiring (contact problems).<br>• Resolve the contact problems or faults at the PROFIBUS master/ PROFINET controller.<br>The inverter terminates the monitoring and does not signal any faults if the signal state remains stable before the time 5 × p9650 expires, longer than p9650:<br> 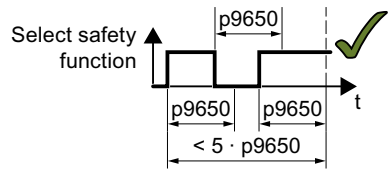 <br><br>1001, 1002: Initialization error, change timer/check timer.<br>• Remedy: Switch off the power supply voltage of the inverter and switch on again.<br>2000: Status of the STO selection for the two monitoring channels is different.<br>Response to a discrepancy when STO is active (Page 188)<br>2001: Checkback signal of the safe pulse suppression for the two monitoring channels is different. |

| Signal | Cause | Remedy |
|---|---|---|
| | Complete information on the messages is available in the List Manual. | |
| | | 2002: Status of the delay timer SS1 in the two monitoring channels is different.<br>Response to a discrepancy when STO is active (Page 188)<br>Response to a discrepancy when SS1 is active (Page 207)<br>2003: Status of the STO terminal at processor 1 and processor 2 is different.<br>Remedy for 2000, 2001, and 2003:<br>• Check the F-DI changeover tolerance time. Increase the value (p9650).<br>• Check the F-DI wiring (contact problems).<br>• Check the causes of the STO selection in r9772.<br>6000: Internal software fault<br>• Switch off the power supply voltage of the inverter and switch on again.<br>• Upgrade firmware to later version<br>• Replace Control Unit<br>6064: Target address and PROFIsafe address differ (F_Dest_Add).<br>• Check the value of the F_Dest_Add F-parameter in the inverter<br>• Check the PROFIsafe address at processor 1 (p9610) and processor 2 (p9810).<br>6065: Target address invalid (F_Dest_Add).<br>• The target address must not be 0 or FFFF.<br>6066: Source address invalid (F_Source_Add).<br>• The source address must not be 0 or FFFF.<br>6067: Watchdog time value invalid (F_WD_Time).<br>• The watchdog time value must not be 0.<br>6165: Fault in reception of the PROFIsafe telegram. This fault can also occur if the inverter has received an inconsistent or out-of-date PROFIsafe telegram after the power supply voltage is switched off and switched on again or after the PROFIBUS/PROFINET line has been inserted.<br>• Check the configuration and communication in the inverter.<br>• Check the value of the F_WD_Time F-parameter in the inverter. Increase the value.<br>6166: Time monitoring fault in reception of the PROFIsafe telegram.<br>• Check the configuration of the communication in the inverter.<br>• Check the setting of the F_WD_Time value in the inverter. Increase the value.<br>• Evaluate the diagnostic information in the F host.<br>• Check the PROFIsafe connection. |
| A01620, F01620 | Safe torque off active | Not necessary. |
| A01621, F01621 | Safe Stop 1 active | Not necessary. |

| Signal | Cause | Remedy |
|---|---|---|
| | **Complete information on the messages is available in the List Manual.** | |
| F01625 | Sign-of-life error in the Safety data | Check that the control cabinet design and cable routing are both in compliance with EMC regulations.<br>Check as to whether an inadmissible voltage, e.g. 230 V, is connected at the Control Unit digital output.<br>Fault acknowledgment<br>1. Select STO, and then deselect again.<br>2. If it cannot be acknowledged, replace the Control Unit. |
| F01630 | Brake control defective<br>Fault value r0949 provides more detailed information. | Depending on the fault value, check the following:<br>10, 11: p1278 ≠ 0, brake not connected, cable interrupted or ground fault<br>20: Short-circuit in the brake winding<br>30, 31, 40: Brake not connected or a short-circuit in the brake winding<br>50: Fault in the Safe Brake Relay, in the Control Unit or in the Power Module. |
| A01631 | Motor holding brake / SBC configuration does not make sense | Check and correct the parameterization of the motor holding brake:<br>The following settings can result in this message:<br>• p1215 = 0 and p9602 = 1.<br>• p1215 = 3 and p9602 = 1. |
| F01640, F01641 | It has been identified that a component has been replaced, acknowledgment/data save is necessary | Corrective maintenance (Page 291) |
| F01649 | Internal software error | 1. Switch off the Control Unit power supply and then on again.<br>2. If it cannot be acknowledged, replace the Control Unit. |
| F01650 | Acceptance test required | Acceptance tests for the safety functions (Page 171) |
| F01651 | Synchronization, safety time slices unsuccessful. | 1. Switch off the Control Unit power supply and then on again.<br>2. If it cannot be acknowledged, replace the Control Unit. |
| F01653 | PROFIBUS/PROFINET configuration error | Check the PROFIBUS or PROFINET configuration of the safety slot on the master side and on the Control Unit. |
| A01654 | PROFIBUS configuration differs | Check the PROFIsafe configuring in the higher-level control.<br>• Alarm value r2124 = 1:<br>In the higher-level F control, remove the PROFIsafe configuring, or enable PROFIsafe in the drive.<br>• Alarm value r2124 = 2:<br>In the higher-level F control, configure the appropriate PROFIsafe telegram. |
| F01655 | Aligning the monitoring functions | 1. Check that the control cabinet design and cable routing are in compliance with EMC regulations.<br>2. Switch off the Control Unit power supply and then on again. |
| F01656 | Parameter processor 2 incorrect | 1. Recommission the safety functions.<br>2. If this is not successful, then replace the Control Unit. |

| Signal | Cause | Remedy |
|---|---|---|
| | Complete information on the messages is available in the List Manual. | |
| F01658 | PROFIsafe telegram number unsuitable | The PROFIsafe telegram number in p60022 is not suitable for the enabled safety functions.<br>Check the following:<br>• If PROFIsafe is not enabled (p9601.3 = 0), PROFIsafe telegrams must not be selected in p60022.<br>• If PROFIsafe is enabled (p9601.3 = 1), you must select a PROFIsafe telegram in p60022.<br>• If transfer of the F-DI via PROFIsafe is selected (p9501.30 = 1), you must select telegram 900 in p60022. |
| F01659 | Write task for parameter rejected | Check the setting of the safety functions.<br>You can find possible reasons for the message in the List Manual. |
| F01660 | Safety functions not supported | Use a Power Module that supports the safety functions.<br>Restrictions when using safety functions (Page 27) |
| F01661 | Simulation of the safety inputs active | Exit the simulation of the digital inputs of the Control Unit for the F-DI (p0795). |
| F01662 | Error, internal communications | 1. Switch off the Control Unit power supply and then on again.<br>2. Contact Technical Support if it cannot be acknowledged. |
| F01663 | Copying the SI parameters rejected | 1. Set p9700 = 0.<br>2. Check: p9501 ≠ 0 and/or p9601 ≠ 0.<br>If this is the case, then correct both parameters.<br>3. Start the copy function again by entering the corresponding value into p9700. |
| F01665 | System is defective | The inverter has identified a defect:<br>1. Switch off the Control Unit power supply and then on again.<br>2. Contact Technical Support if it cannot be acknowledged.<br>You have not configured the "STO via Power Module terminals" function, but you have activated the terminals on the PM240-2 or PM240P-2 Power Module:<br>1. Set the switch for the fail-safe digital input of the Power Module (STO_A and STO_B) into the "OFF" position. |
| A01666, F01666 | Static 1 signal at the F-DI for safe acknowledgement | Set the signal at the F-DI to acknowledge the safety functions for a logical 0 signal. |
| A01669 | Unsuitable combination of motor and power unit. | The ratio between the rated power unit current (r0207[0]) and rated motor current (p0305) should be greater than 5.<br>In operation, message C01711 or C30711 can be sporadically output with values<br>1041 … 1044.<br>Use a suitable power unit with a lower power rating or a motor with a higher power rating. |
| A01678 | Test stop for STO via terminals at the PM required | The set time (p9661) to monitor the forced checking procedure (test stop) for the "STO via Power Module terminals" function has been exceeded.<br>Deselect the "STO via Power Module terminals" function and then select again. |

| Signal | Cause | Remedy |
|---|---|---|
| | Complete information on the messages is available in the List Manual. | |
| F01680 | Checksum error safe monitoring functions | 1. Check the safety-related parameters.<br>2. Switch off the power supply voltage of the inverter and switch on again. |
| F01681 | Incorrect parameter value | Correct the parameter value:<br>Fault value (r0949) yyyyxxxx decimal, yyyy = supplementary information, xxxx = parameter |
| F01682 | Monitoring function not supported | Deselect the monitoring function involved (p9501, p9601, p9801). |
| F01683 | SLS enable missing | 1. Enable the SLS function (p9501.0).<br>2. Save the setting (copy RAM to ROM).<br>3. Switch off the power supply voltage of the inverter and switch on again. |
| F01690 | Data backup problem involving the NVRAM | Please contact Technical Support. |
| F01692 | Parameter value not permitted for encoderless | 1. From r0949, read out the (decimal) parameter number with the incorrect value.<br>2. Correct the parameter value of the checksums. |
| A01693, F01693 | Safety parameterization changed, POWER ON required | 1. Save the parameters so that they are protected against power failure (RAM → ROM).<br>2. Switch off the Control Unit power supply and then on again. |
| A01696 | Test stop for motion monitoring is selected when powering up | The forced checking procedure (test stop) of the extended functions is selected when powering up – and this is not permissible.<br>Deselect the forced checking procedure of the extended functions and then select again. |
| A01697, F01697 | Test stop for motion monitoring is required | The time set in p9559 for the forced checking procedure (test stop) for the extended functions has been exceeded.<br>Start the forced checking procedure. p9705 defines the signal source to select the forced checking procedure. |
| A01698 | Commissioning mode active | Not necessary. |
| A01699 | Test stop for STO is required | The time set in p9659 for the forced checking procedure (test stop) for the basic functions has been exceeded.<br>Select STO, and then deselect again. |
| C01700 (fault) | STOP A initiated | Generally, this fault is a consequence of C01701, C01706, C01714 or C01716. |
| C01701 (fault) | STOP B initiated | Generally, this fault is a consequence of C01706, C01714 or C01716. |
| C01706 (alarm or fault) [1)] | SAM/SBR limit exceeded | 1. Check the motor braking response.<br>2. Adapt the tolerance for the parameterization of the "safe braking ramp". |

| Signal | Cause | Remedy |
|---|---|---|
| | Complete information on the messages is available in the List Manual. | |
| C01711 (alarm) [1] | Defect in a monitoring channel<br>Fault value r2124 provides more detailed information. | The complete list of the r2124 fault values is provided in the List Manual.<br>0 … 2: Fault in data cross-check between processor 1 and processor 2. Remedy: Please refer to the List Manual.<br>3: Difference of the position actual value (r9713) between the two monitoring channels is greater than the tolerance in p9542.<br>Setting encoderless actual value sensing (Page 131)<br>4 … 43: Fault in data cross-check between processor 1 and processor 2. Remedy: Please refer to the List Manual.<br>44 … 57: The tolerance value for the monitoring function differs between the two monitoring channels.<br>Setting encoderless actual value sensing (Page 131)<br>58 … 999: Fault in data cross-check between processor 1 and processor 2. Remedy: Please refer to the List Manual.<br>1000: Check (watchdog) timer has expired.<br>• Too many signal changes at the F-DI<br>Remedy:<br>• Check the F-DI wiring (contact problems).<br>1001: Initialization error of the check timer.<br>• Remedy: Switch off the power supply voltage of the inverter and switch on again.<br>• Upgrade inverter firmware<br>1005: Pulses already canceled for test stop selection.<br>1011: Acceptance test status between the monitoring channels differ.<br>• Diagnostics in the List Manual under r9571.<br>1020: Cyclic communication failure between the monitoring channels.<br>• Remedy: Switch off the power supply voltage of the inverter and switch on again.<br>• Replace the Control Unit or the inverter.<br>1041: Current value too low for encoderless actual value acquisition.<br>• Reduce the minimum current (p9588). |

| Signal | Cause | Remedy |
|---|---|---|
| | Complete information on the messages is available in the List Manual. | |
| | | 1042: Current or voltage plausibility error.<br>• Increase the ramp-up and ramp-down time (p1120/p1121).<br>• Check whether the current and speed control settings are correct (torque-forming, field-forming current andactual speed value must not fluctuate).<br>• Reduce the dynamic response of the setpoint.<br>• Increase the minimum current (p9588).<br>• Maintain an adequate wait time before switching on the motor.<br>Switching on the motor when SLS is active (Page 227)<br>Switching on the motor when SSM is active (Page 239)<br>Switching on the motor when SDI is active (Page 246)<br>1043: Too many acceleration processes.<br>• Increase the value for "Actual value sensing encoderless acceleration limit" (p9589).<br>• Increase the ramp-up and ramp-down time (p1120/p1121).<br>• Check whether the current and speed control settings are correct (torque-generating, field-generating current and speed actual value must not fluctuate).<br>• Reduce the dynamic response of the setpoint.<br>1044: Actual current value plausibility error.<br>6000 … 6166: The significance of the message values is described in the safety fault F01611 with the fault value r0949. |
| C01712 (alarm) [1] | Defect when processing F-IO | 1. Check the F-DI wiring.<br>2. Check the setting of the safety functions.<br>3. Perform an acceptance test. |
| C01714 (alarm) [1] | Safely limited speed exceeded | 1. Check the speed setpoint received from the higher-level control.<br>2. Check the SLS limits. |
| C01716 (fault) | Tolerance for safe direction of motion exceeded | Check the tolerance setting for the SDI function. |
| C01770 (fault) | Discrepancy error of the fail-safe digital inputs. | Check the F-DI wiring. |
| A01772 | Test stop for fail-safe digital output running | The alarm automatically disappears after successfully ending or canceling (error) the forced checking procedure (test stop). |
| F01773 | Test stop for fail-safe digital output error | 1. Check the wiring of the fail-safe digital output.<br>2. Start the forced checking procedure. |
| A01774 | Test stop for fail-safe digital output required | The time to carry out the forced checking procedure (test stop) has expired (p10003).<br>Start the forced checking procedure of the fail-safe output. |
| A01788 | Automatic test stop waits for STO to be deselected via the motion monitoring functions | The inverter was not able to carry out the automatic test stop (forced checking procedure) after switching on the power supply voltage. Possible causes:<br>• STO for the extended functions is selected.<br>• A safety message is active, which resulted in STO. |

| Signal | Cause | Remedy |
|---|---|---|
| | Complete information on the messages is available in the List Manual. | |
| A01790 | Powering up stopped due to "STO via Power Module terminals | After the power supply voltage has been switched on, the inverter was not able to complete its automatic self test. Possible cause: The "STO via Power Module terminals" function is active. |
| A01796 | Waiting for communication | • Check the operating state of the F host.<br>• Check the communication connection to the F host. |
| C01798 (alarm) | Test stop for motion monitoring is running | The inverter is presently carry out the forced checking procedure (test stop) for the extended functions. The inverter withdraws the message after the end of the test stop. |
| C01799 (alarm) | Acceptance test mode active | Not necessary. The inverter withdraws the message after the end of the acceptance test mode. |
| F30600 | STOP A initiated.<br>Fault value r0949 provides more detailed information. | The remedy depends on the fault value. The complete list of the fault values is provided in the List Manual.<br>0: Stop request from processor 2.<br>1005: Pulses are canceled, although neither is STO selected nor an internal STOP A active.<br>Cause 1: Defective hardware. Remedy:<br>1. Select STO and then deselect again.<br>2. Switch off the power supply voltage of the inverter and switch on again.<br>3. Replace the Power Module if it cannot be acknowledged.<br>Cause 2: The "STO via Power Module terminals" function is selected, however the function is not enabled in the Control Unit (p9601.7 = p9801.7 = 0). Remedy:<br>1. Set both switches on the PM240-2 or PM240P-2 Power Module to the "OFF" setting, or enable the function in the Control Unit.<br>2. Acknowledge the inverter fail-safe.<br>3. Replace the Power Module if it cannot be acknowledged.<br>1010 … 1011: For details, please refer to the List Manual. Remedy:<br>1. Select STO and then deselect again.<br>2. Switch off the power supply voltage of the inverter and switch on again.<br>3. Replace the Power Module if it cannot be acknowledged.<br>1030: Discrepancy at terminals STO_A and STO_B on the PM240-2 or PM240P-2 Power Module. Remedy:<br>1. Remove the discrepancy at the terminals.<br>2. Acknowledge the inverter fail-safe.<br>3. Replace the Power Module if it cannot be acknowledged.<br>9999: Subsequent response to fault F01611. |
| F30611 | Defect in a monitoring channel.<br>Fault value r0949 provides more detailed information. | Fault values and remedies are described under fault F01611. |
| A30620, F30620 | Safe torque off active | Not necessary. |
| A30621, F30621 | Safe Stop 1 active | Not necessary. |

| Signal | Cause | Remedy |
|---|---|---|
| | Complete information on the messages is available in the List Manual. | |
| F30625 | Sign-of-life error in the Safety data | 1. Select STO.<br>2. Deselect STO.<br>3. If it cannot be acknowledged, replace the Control Unit. |
| F30630 | Brake control defective | 1. Check the following:<br>– p1278 = 0.<br>– Motor holding brake connection<br>– Motor holding brake function<br>– EMC-compliant control cabinet design and cable routing<br>2. Select STO, and then deselect again. |
| F30649 | Internal software error | 1. Switch off the Control Unit power supply and then on again.<br>2. Contact Technical Support if it cannot be acknowledged. |
| F30650 | Acceptance test required | Acceptance tests for the safety functions (Page 171) |
| F30651 | Synchronization with Control Unit unsuccessful. | 1. Switch off the Control Unit power supply and then on again.<br>2. Contact Technical Support if it cannot be acknowledged. |
| F30655 | Aligning the monitoring functions | 1. Check that the control cabinet design and cable routing are in compliance with EMC regulations.<br>2. Switch off the Control Unit power supply and then on again. |
| F30656 | Parameter processor 2 incorrect | 1. Recommission the safety functions.<br>2. If this is not successful, then replace the Control Unit. |
| F30659 | Write task for parameter rejected | Check the following:<br>• Password<br>• Only restore factory settings with the safety functions inhibited |
| F30662 | Error, internal communications | 1. Switch off the Control Unit power supply and then on again.<br>2. Contact Technical Support if it cannot be acknowledged. |
| F30664 | Fault during power-up | Switch off the power supply voltage of the inverter and switch on again. Contact Technical Support if it cannot be acknowledged. |
| F30665 | System is defective | 1. Switch off the Control Unit power supply and then on again.<br>2. If it cannot be acknowledged, replace the Control Unit. |
| A30666, F30666 | Static 1 signal at the F-DI for safe acknowledgement | Set the F-DI input to a 0 signal for acknowledging the safety functions. |
| F30680 | Checksum error safe monitoring functions | 1. Check the setting of the safety functions.<br>2. Switch off the Control Unit power supply and then on again. |
| F30681 | Incorrect parameter value | Correct the parameter value:<br>Fault value (r0949) yyyyxxxx decimal, yyyy = supplementary information, xxxx = parameter |
| F30682 | Monitoring function not supported | Deselect the monitoring function involved (p9501, p9601, p9801). |
| F30683 | SLS enable missing | 1. Enable the SLS function (p9501.0).<br>2. Save the setting (copy RAM to ROM).<br>3. Switch off the Control Unit power supply and then on again. |
| F30692 | Parameter value not permitted for encoderless | Correct the parameter value. |

| Signal | Cause | Remedy |
|---|---|---|
| | Complete information on the messages is available in the List Manual. | |
| A30693, F30693 | Safety parameterization changed, POWER ON required | 1. Save the settings so that they are protected against power failure (RAM → ROM).<br>2. Switch off the Control Unit power supply and then on again. |
| C30700 (fault) | STOP A initiated | Generally, this fault is a consequence of C30701, C30706, C30714 or C30716. |
| C30701 (fault) | STOP B initiated | Generally, this fault is a consequence of C30706, C30714 or C30716. |
| C30706 (alarm or fault) [1] | SAM/SBR limit exceeded | 1. Check the motor braking response.<br>2. Adapt the tolerance for the parameterization of the "safe braking ramp". |
| C30711 (alarm) [1] | Defect in a monitoring channel.<br>Fault value r2124 provides more detailed information. | Diagnostics for the fault values and remedies are described under message C01711. |
| C30712 (alarm) [1] | Defect when processing F-IO | 1. Check the F-DI wiring.<br>2. Check the setting of the safety functions.<br>3. Perform an acceptance test. |
| C30714 (alarm) [1] | Safely limited speed exceeded | 1. Check the speed setpoint received from the higher-level control.<br>2. Check the SLS limits. |
| C30716 (fault) | Tolerance for safe direction of motion exceeded | Check the tolerance for the "SDI" function. |
| C30770 (fault) | Discrepancy error of the fail-safe digital inputs or the fail-safe digital outputs. | Check the F-DI wiring. |
| A30772 | Test stop for fail-safe digital output running | The alarm automatically disappears after successfully ending or canceling (error) the forced checking procedure (test stop). |
| F30773 | Test stop for fail-safe digital output error | 1. Check the wiring of the fail-safe digital output.<br>2. Start the forced checking procedure. |
| A30788 | Automatic test stop: Wait for STO to be deselected via SMM | • Deselect STO of the extended functions.<br>• Remove the cause for active safety messages and acknowledge the messages |
| C30798 (alarm) | Test stop for motion monitoring is running | Not necessary. The inverter withdraws the message after the end of the test stop. |
| C30799 (alarm) | Acceptance test mode active | Not necessary. The inverter withdraws the message after the end of the acceptance test mode. |
| [1] If the safety functions of the inverter have been enabled, then this alarm initiates a STOP response and an inverter fault. | | |

# Corrective maintenance 7

## 7.1 About this chapter

### What can you find in this Chapter?

In this chapter, you will find answers to the following questions:

- Where can I obtain the necessary information to maintain the operational safety and reliability of my system or machine?
- How do I replace defective components of the inverter or the inverter itself?
- How do I ensure that the safety functions are still working correctly after making a replacement?

## 7.2 Maintaining operational safety

### Responsibility for operational safety

As company operating plants or machines or as supplier of plants and machines with safety-related equipment, you are responsible for the operational safety of your plant or machine. As a consequence, you are obliged to continually inform yourself about the products used.

**WARNING**

**Incorrect/faulty components in safety-related systems and machines**

Disregarding current product developments and properties can mean that product faults are possibly not resolved. Incorrect/faulty components in safety-related systems and machines can result in an increase risk of accidents.

- Register to receive the appropriate newsletters on these topics.
- If necessary, modify your plant or machine so that the requirements of the safety functions are always complied with.

### Registering to receive the newsletter

**Procedure**

1. On the Internet, open the following page:
   Siemens automation technology (www.automation.siemens.com).
2. On this page, open the folder "Presales info".
3. In folder "Presales info", select the "Newsletter" link.
4. Select "Login/registration" and log in with your access data.
5. In the "Newsletter system", select the "All newsletters" tab.
6. Open folder "Products and solutions".
7. Subscribe to the "Safety Integrated Newsletter".

You have subscribed to the "Safety Integrated Newsletter".
❒

## 7.3 Replacing components of the SINAMICS G120 or G120D inverters

**WARNING**

**Unexpected machine motion after replacing hardware or updating firmware**

The drive can malfunction after replacing drive components or updating the firmware. This can place people at risk or cause material damage.

- Before switching on the power supply voltage again, ensure that nobody is in the dangerous area around the machine.
- Close the protective devices available before you switch on the power supply voltage.
- Check the stability of the closed-loop control, for example, by briefly moving the drive in both directions of rotation.
- Perform a reduced acceptance test.

## 7.3.1 Overview of replacing converter components

### Permissible replacement of components

In the event of a long-term function fault, you must replace the Power Module or Control Unit. The inverter's Power Module and Control Unit can be replaced independently of each other.

In the following cases you will need to replace the inverter:

| Replacing the Power Module | | Replacing the Control Unit | |
|---|---|---|---|
| Replacement:<br>• Same type<br>• Same power rating | Replacement:<br>• Same type<br>• Same frame size<br>• *Higher* power rating | Replacement:<br>• Same type<br>• Same firmware version | Replacement:<br>• Same type<br>• *Higher* firmware version (e.g. replace FW V4.2 by FW V4.3) |
| x kW x kW<br> | y kW > x kW<br> 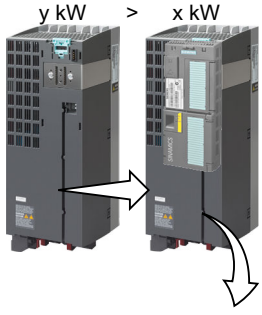 | Firmware A Firmware A<br> 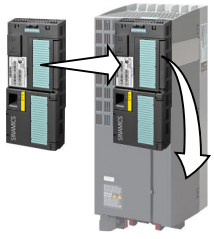 | Firmware A > Firmware B<br> 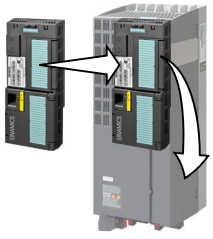 |
| | Power Module and motor must be adapted to one another (ratio of motor and Power Module rated power > 1/4) | After replacing the Control Unit, you must restore the inverter's settings. | |

**WARNING**

**Unexpected machine motion caused by incorrect/inappropriate inverter settings**

Replacing inverters of different types can result in incomplete or incorrect/inappropriate inverter settings. As a consequence, unexpected machine motion, e.g. speed oscillation, overspeed or incorrect direction of rotation. Unexpected machine motion can result in death, injury or material damage.

- In all cases that are not permitted according to the table above, recommission the drive after replacing an inverter.

### Special issue relating to communication via PROFINET: Device replacement without removable data storage medium

The inverter supports the PROFINET functionality, replacing the device without data storage medium. After replacing the Control Unit, the inverter is automatically assigned its device name from the IO controller.

Independent of this, after replacing the inverter, you must transfer the settings of the old inverter to the new inverter.

Details of the device replacement without removable storage medium can be found in the Internet:

PROFINET system description (http://support.automation.siemens.com/WW/view/en/19292127).

## 7.3.2 Replacing a Control Unit with enabled safety function

### Replacing a Control Unit with data backup on a memory card

If you use a memory card with firmware, after the replacement, you obtain a precise copy (firmware and settings) of the replaced Control Unit.

#### Requirement

You have a memory card with the actual settings of the Control unit to be replaced.

#### Procedure

1. Disconnect the line voltage to the Power Module and (if installed) the external 24 V supply or the voltage for the digital outputs of the Control Unit.
2. Remove the signal cables from the Control Unit.
3. Remove the defective Control Unit.
4. Remove the memory card from the old Control Unit and insert it in the new Control Unit.
5. Mount the new Control Unit on the Power Module. The new Control Unit must have the same article number and the same or higher firmware version as the Control Unit that was replaced.
6. Reconnect the signal cables of the Control Unit.
7. Switch on the line voltage again.
8. The inverter loads the settings from the memory card.
9. Check what the inverter reports after loading.
   - Alarm A01028:
     The loaded settings are not compatible with the inverter.
     Set p0971 = 1 to delete the alarm. Check the inverter settings. We recommend that you recommission the drive.
   - Fault F01641:
     Acknowledge the message.
     Perform a **reduced** acceptance test.
     Reduced acceptance after a component has been replaced and a firmware change (Page 323)

You have replaced the Control Unit and transferred the safety function settings from the memory card to the new Control Unit.
❐

### Replacing a Control Unit with data backup in Startdrive

#### Requirement

You have backed up the actual settings of the Control Unit to be replaced to a PC using Startdrive.

### Procedure

1. Switch off the line voltage to the Power Module and (if installed) the external 24 V supply or the voltage for the digital outputs of the Control Unit.
2. Remove the signal cables of the Control Unit.
3. Remove the defective Control Unit.
4. Mount the new Control Unit on the Power Module.
5. Reconnect the signal cables of the Control Unit.
6. Switch on the line voltage again.
7. Open the right project for the drive in the PC.
8. Select "Load to device".
9. Connect Startdrive online with the drive.
   The inverter signals faults after the download. Ignore these faults, as they will be automatically acknowledged by the following steps.
10. Press the "Start safety commissioning" button.
11. Enter the password for the safety functions.
12. Confirm the prompt for saving your settings (copy RAM to ROM).
13. Disconnect the online connection.
14. Switch off the inverter power supply.
15. Wait until all LEDs on the inverter are dark.
16. Switch the inverter power supply on again.
17. Perform a **reduced** acceptance test.
    Reduced acceptance after a component has been replaced and a firmware change (Page 323)

You have replaced the Control Unit and transferred the safety function settings from the PC to the new Control Unit.
❐

## Replacing the Control Unit with data backup in the operator panel

### Requirement

You have backed up the actual settings of the Control Unit to be replaced to an operator panel.

### Procedure

1. Switch off the line voltage to the Power Module and (if installed) the external 24 V supply or the voltage for the digital outputs of the Control Unit.
2. Remove the signal cables of the Control Unit.
3. Remove the defective Control Unit.
4. Mount the new Control Unit on the Power Module.
5. Reconnect the signal cables of the Control Unit.

6. Switch on the line voltage again.
7. Plug the Operator Panel into the Control Unit or connect the Operator Panel handheld device with the inverter.
8. Transfer the settings from the operator panel to the inverter.
9. Wait until the transfer is complete.
10. After loading, check whether the inverter outputs Alarm A01028.
    - Alarm A01028:
      The loaded settings are not compatible with the inverter.
      Set p0971 = 1 to delete the alarm. Check the inverter settings. We recommend that you recommission the drive.
    - No alarm A01028: Proceed with the next step.
11. Switch off the inverter power supply.
12. Wait until all LEDs on the inverter are dark.
13. Switch the inverter power supply on again.
    The inverter reports the faults F01641, F01650, F01680 and F30680. Ignore these faults, as they will be automatically acknowledged by the following steps.
14. Set p0010 to 95.
15. Set p9761 to the safety password.
16. Set p9701 to AC hex.
17. Set p0010 = 0.
18. Back up the settings so they are not lost when the power fails:
    - For BOP-2 in the menu "EXTRAS" - "RAM-ROM".
    - IOP in the menu "SAVE RAM TO ROM".
19. Switch off the inverter power supply.
20. Wait until all LEDs on the inverter are dark.
21. Switch the inverter power supply on again.
22. Perform a **reduced** acceptance test
    Reduced acceptance after a component has been replaced and a firmware change (Page 323)

You have replaced the Control Unit and transferred the safety function settings from the operator panel to the new Control Unit.
❐

### 7.3.3 Replacing the Control Unit without data backup

If you do not backup the settings, then you must recommission the drive after replacing the Control Unit.

**Procedure**

1. Switch off the line voltage to the Power Module and (if installed) the external 24 V supply or the voltage for the digital outputs of the Control Unit.
2. Remove the signal cables of the Control Unit.
3. Remove the defective Control Unit.
4. Mount the new Control Unit on the Power Module.
5. Reconnect the signal cables of the Control Unit.
6. Switch on the line voltage again.
7. Recommission the drive.

The Control Unit replacement has been completed once the drive has been successfully commissioned.
❐

### 7.3.4 Replacing a Power Module with enabled safety function

**WARNING**

**Electric shock due to residual charge in the Power Module**

After switching off the line voltage, it will take up to 5 minutes until the capacitors in the Power Module are sufficiently discharged for the residual voltage to be safe. Death or serious injury will result if energized parts are touched.

- Check the safe isolation of the Power Module connections before carrying out installation work.

**NOTICE**

**Motor damage due to interchanged motor connecting cables**

The direction in which the motor rotates switches if you exchange the two phases of the motor line. A motor with an incorrect direction of rotation can damage the machine or installation. Driven loads with only one permissible direction of rotation include certain saws.

- Connect the three phases of the motor lines in the right order.
- After replacing the Power Module, check the direction of motor rotation.

**Procedure**

1. Switch off the line voltage of the Power Module.
   You can leave any external 24 V supply to the Control Unit switched on.
2. Remove the connecting cables of the Power module.
3. Remove the Control Unit from the Power Module.
4. Replace the Power Module.
5. Mount the Control Unit onto the new Power Module.
6. Connect up the new Power Module using the connecting cables.
7. Switch on the line supply and, if necessary, the 24 V supply of the Control Unit.
8. The inverter reports F01641.
9. Perform a reduced acceptance test
   Reduced acceptance after a component has been replaced and a firmware change (Page 323)

You have successfully replaced the Power Module.
❒

## 7.4 Replacing the SINAMICS G120C converter

**WARNING**

**Unexpected machine motion after replacing hardware or updating firmware**

The drive can malfunction after replacing drive components or updating the firmware. This can place people at risk or cause material damage.

- Before switching on the power supply voltage again, ensure that nobody is in the dangerous area around the machine.
- Close the protective devices available before you switch on the power supply voltage.
- Check the stability of the closed-loop control, for example, by briefly moving the drive in both directions of rotation.
- Perform a reduced acceptance test.

## 7.4.1 Overview of how to replace an inverter

### Permissible replacement

You must replace the inverter if it continually malfunctions.

In the following cases you will need to replace the inverter:

| | | | |
|---|---|---|---|
| Replacement:<br>• Same power rating<br>• Same firmware version | Replacement:<br>• Same power rating<br>• *Higher* firmware version (e.g. replace FW V4.2 by FW V4.3) | Replacement:<br>• Same frame size<br>• *Higher* power rating<br>• Same firmware version | Replacement:<br>• Same frame size<br>• *Higher* power rating<br>• *Higher* firmware version (e.g. replace FW V4.2 by FW V4.3) |
| 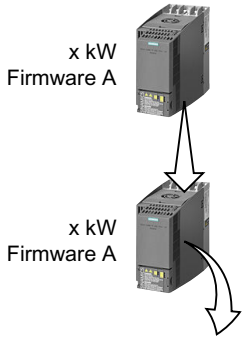 | 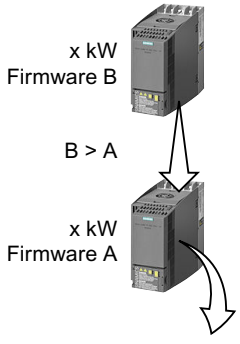 | 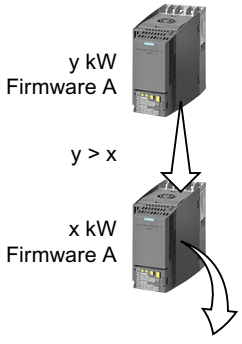 | 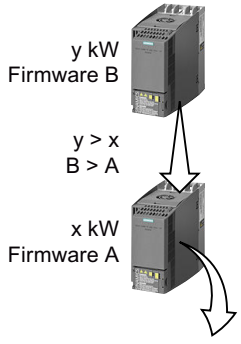 |
| | | Inverter and motor must match one another (ratio between the motor and inverter rated power > 1/4) | |

**WARNING**

**Unexpected machine motion caused by incorrect/inappropriate inverter settings**

Replacing inverters of different types can result in incomplete or incorrect/inappropriate inverter settings. As a consequence, unexpected machine motion, e.g. speed oscillation, overspeed or incorrect direction of rotation. Unexpected machine motion can result in death, injury or material damage.

- In all cases that are not permitted according to the table above, recommission the drive after replacing an inverter.

### Special issue relating to communication via PROFINET: Device replacement without removable data storage medium

The inverter supports the PROFINET functionality, replacing the device without data storage medium.

#### Precondition

The topology of the PROFINET IO system with the IO device involved is configured in your higher-level control system.

### Replacing the device

The inverter can be replaced without having to insert a removable data storage medium (e.g. a memory card) with the saved device names in the inverter – or having to reassign the device names with a PG.

Details of the device replacement without removable storage medium can be found in the Internet:

PROFINET system description (http://support.automation.siemens.com/WW/view/en/19292127).

## 7.4.2 Replacing a converter with enabled safety function

**WARNING**

**Electric shock as a result of a residual charge in power components**

After the power supply has been switched off, it takes up to 5 min. until the capacitors in the inverter have discharged so that the remaining voltage is at a non-hazardous level. Death or serious injury will result if energized parts are touched.

- Check that the inverter connections are in a no-voltage condition before you carry out any installation work.

**NOTICE**

**Motor damage due to interchanged motor connecting cables**

The direction in which the motor rotates switches if you exchange the two phases of the motor line. A motor with an incorrect direction of rotation can damage the machine or installation. Driven loads with only one permissible direction of rotation include certain saws.

- Connect the three phases of the motor lines in the right order.
- After replacing the inverter, check the direction in which the motor rotates.

### Replacing an inverter with data backup on a memory card

**Procedure**

1. Disconnect/switch off the line voltage to the inverter and (if installed) the external 24 V supply or the voltage for the digital outputs of the inverter.
2. Remove the connecting cables of the inverter.
3. Remove the defective inverter.
4. Install the new inverter.
5. Remove the memory card from the old inverter, and insert this into the new inverter.
6. Connect all of the cables to the inverter.
7. Reconnect the line voltage, and (if being used) the external 24 V supply or the voltage for the digital outputs of the inverter.
8. The inverter loads the settings from the memory card.
9. After loading, check whether the inverter outputs Alarm A01028.
   - Alarm A01028:
     The loaded settings are not compatible with the inverter.
     Set p0971 = 1 to delete the alarm. Check the inverter settings. We recommend that you recommission the drive.
   - No alarm A01028:
     Perform a **reduced** acceptance test.
     Reduced acceptance after a component has been replaced and a firmware change (Page 323)

You have replaced the inverter and transferred the safety function settings from the memory card to the new inverter.
❐

## Replacing an inverter with data backup in Startdrive

### Requirement

You have backed up the actual settings of the inverter to be replaced to a PC using Startdrive.

### Procedure

1. Disconnect the line voltage to the inverter and (if installed) the external 24 V supply or the voltage for the digital outputs of the inverter.
2. Remove the connecting cables of the inverter.
3. Remove the defective inverter.
4. Install the new inverter.
5. Connect all of the cables to the inverter.
6. Reconnect the line voltage, and (if being used) the external 24 V supply or the voltage for the digital outputs of the inverter.
7. In Startdrive, open the project that matches the drive.
8. Select "Load to device".
9. Connect Startdrive online with the drive.
   The inverter signals faults after the download. Ignore these faults, as they will be automatically acknowledged by the following steps.
10. Press the "Start safety commissioning" button.
11. Enter the password for the safety functions.
12. Confirm the prompt for saving your settings (copy RAM to ROM).
13. Disconnect the online connection.
14. Switch off the inverter power supply.
15. Wait until all LEDs on the inverter are dark.
16. Switch the inverter power supply on again.
17. Perform a **reduced** acceptance test.
    Reduced acceptance after a component has been replaced and a firmware change (Page 323)

You have replaced the inverter and transferred the safety function settings from the PC to the new inverter.
❐

## Replacing the inverter with data backup in the Operator Panel (BOP-2 or IOP-2)

### Procedure

1. Disconnect the line voltage to the inverter and (if installed) the external 24 V supply or the voltage for the digital outputs of the inverter.
2. Remove the connecting cables of the inverter.
3. Remove the defective inverter.
4. Install the new inverter.
5. Connect all of the cables to the inverter.
6. Reconnect the line voltage, and (if being used) the external 24 V supply or the voltage for the digital outputs of the inverter.
7. Attach the Operator Panel to the inverter.
8. Transfer the settings from the Operator Panel to the inverter, e.g. via menu "EXTRAS" - "FROM BOP" in the BOP-2.
9. Wait until the transfer is complete.
10. After loading, check whether the inverter outputs Alarm A01028.
    - Alarm A01028:
      The loaded settings are not compatible with the inverter.
      Set p0971 = 1 to delete the alarm. Check the inverter settings. We recommend that you recommission the drive.
    - No alarm A01028: Proceed with the next step.
11. Switch off the inverter power supply.
12. Wait until all LEDs on the inverter are dark.
13. Switch the inverter power supply on again.
    The inverter reports the faults F01641, F01650, F01680 and F30680. Ignore these faults, as they will be automatically acknowledged by the following steps.
14. Set p0010 to 95.
15. Set p9761 to the safety password.
16. Set p9701 to AC hex.
17. Set p0010 = 0.
18. Back up the settings so they are not lost when the power fails:
    - For BOP-2 in the menu "EXTRAS" - "RAM-ROM".
    - For IOP-2 in the menu "SAVE RAM TO ROM".
19. Switch off the inverter power supply.
20. Wait until all LEDs on the inverter are dark.
21. Switch the inverter power supply on again.
22. Perform a **reduced** acceptance test.
    Reduced acceptance after a component has been replaced and a firmware change (Page 323)

You have replaced the inverter and transferred the safety function settings from the operator panel to the new inverter.
❐

### 7.4.3 Replacing a converter without data backup

If the settings have not been backed up, after replacing the inverter, you must recommission the drive.

**Procedure**

1. Disconnect the line voltage to the inverter and (if installed) the external 24 V supply or the voltage for the digital outputs of the inverter.
2. Remove the connecting cables of the inverter.
3. Remove the defective inverter.
4. Install the new inverter.
5. Connect all of the cables to the inverter.
6. Reconnect the line voltage, and (if being used) the external 24 V supply or the voltage for the digital outputs of the inverter.
7. Recommission the drive.

Inverter replacement has been completed once it has been commissioned.
❒

## 7.5 Replacing components of the SINAMICS G110M inverters

**WARNING**

**Unexpected machine motion after replacing hardware or updating firmware**

The drive can malfunction after replacing drive components or updating the firmware. This can place people at risk or cause material damage.

- Before switching on the power supply voltage again, ensure that nobody is in the dangerous area around the machine.
- Close the protective devices available before you switch on the power supply voltage.
- Check the stability of the closed-loop control, for example, by briefly moving the drive in both directions of rotation.
- Perform a reduced acceptance test.

## 7.5.1 Overview of replacing converter components

### Permissible replacement of components

In the event of a long-term function fault, you must replace the Power Module or Control Unit. The inverter's Power Module and Control Unit can be replaced independently of each other.

In the following cases you will need to replace the inverter:

| Replacing the Power Module | | Replacing the Control Unit | |
|---|---|---|---|
| Replacement:<br>• Same power rating | Replacement:<br>• *Higher* power rating | Replacement:<br>• Same firmware version | Replacement:<br>• *higher* firmware version (e.g. replace FW V4.7 by FW V4.7 SP3) |
| 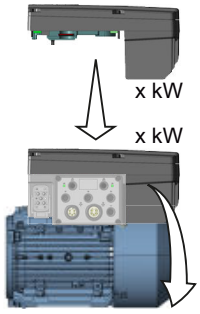 | 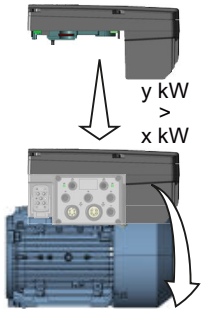 | 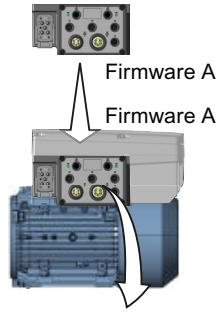 | 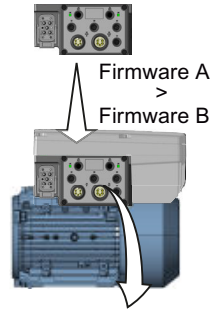 |
| | Power Module and motor must be adapted to one another (ratio of motor and Power Module rated power > 1/4) | After replacing the Control Unit, you must restore the inverter's settings. | |

**WARNING**

**Unexpected machine motion caused by incorrect/inappropriate inverter settings**

Replacing inverters of different types can result in incomplete or incorrect/inappropriate inverter settings. As a consequence, unexpected machine motion, e.g. speed oscillation, overspeed or incorrect direction of rotation. Unexpected machine motion can result in death, injury or material damage.

- In all cases that are not permitted according to the table above, recommission the drive after replacing an inverter.

### Special issue relating to communication via PROFINET: Device replacement without removable data storage medium

The inverter supports the PROFINET functionality, replacing the device without data storage medium.

#### Precondition

The topology of the PROFINET IO system with the IO device involved is configured in your higher-level control system.

### Replacing the device

The Control Unit can be replaced without having to insert a removable data storage medium (e.g. a memory card) with the saved device names in the inverter – or having to reassign the device names with a PG.

Details of the device replacement without removable storage medium can be found in the Internet:

PROFINET system description (http://support.automation.siemens.com/WW/view/en/19292127).

## 7.5.2 Replacing a Control Unit with enabled safety function

**WARNING**

**Danger from touching energized Power Module connections**

After switching off the line voltage, it will take up to 5 minutes until the capacitors in the Power Module are sufficiently discharged for the residual voltage to be safe. Touching live components can result in death or severe injury.

- Check that the Power Module connections are in a no-voltage condition after you have removed the cables from the Power Module.

### Replacing a Control Unit with data backup on a memory card

If you use a memory card with firmware, after the replacement, you obtain a precise copy (firmware and settings) of the replaced Control Unit.

#### Requirement

You have a memory card with the actual settings of the Control unit to be replaced.

#### Procedure

1. Switch off the inverter power supply voltage.
2. Remove all cables from the inverter.
3. After 5 minutes, check whether the device is in a no-voltage condition.
4. Release the four Power Modules screws.
5. Remove the Power Module.
6. Withdraw the ribbon cable to the CPI module from the Control Unit.
7. Release the four screws from the Control Unit.
8. Remove the defective Control Unit.
9. Mount the new Control Unit. The new Control Unit must have the same article number and the same or higher firmware version as the Control Unit that was replaced.
10. Insert the ribbon cable to the CPI module back into the Control Unit.
11. Mount the Power Module on the Control Unit.
12. Reconnect all of the cables to the inverter.
13. Switch on the power supply voltages again.

14. The inverter loads its settings from the memory card.
15. Check what the inverter reports after loading.
    - Alarm A01028:
      The loaded settings are not compatible with the inverter.
      Set p0971 = 1 to delete the alarm. Check the inverter settings. We recommend that you recommission the drive.
    - Fault F01641:
      Acknowledge the message.
      Perform a **reduced** acceptance test.
      Reduced acceptance after a component has been replaced and a firmware change (Page 323)

You have replaced the Control Unit and transferred the safety function settings from the memory card to the new Control Unit.
❐

## Replacing a Control Unit with data backup in Startdrive

### Requirement

You have backed up the actual settings of the Control Unit to be replaced to a PC using Startdrive.

### Procedure

1. Switch off the inverter power supply voltage.
2. Remove all cables from the inverter.
3. After 5 minutes, check whether the device is in a no-voltage condition.
4. Release the four Power Modules screws.
5. Remove the Power Module.
6. Withdraw the ribbon cable to the CPI module from the Control Unit.
7. Release the four screws from the Control Unit.
8. Remove the defective Control Unit.
9. Mount the new Control Unit. The new Control Unit must have the same article number and the same or higher firmware version as the Control Unit that was replaced.
10. Insert the ribbon cable to the CPI module back into the Control Unit.
11. Mount the Power Module on the Control Unit.
12. Reconnect all of the cables to the inverter.
13. Switch on the power supply voltages again.
14. Open the right project for the drive in the PC.
15. Select "Load to device".
16. Connect Startdrive online with the drive.
    The inverter signals faults after the download. Ignore these faults, as they will be automatically acknowledged by the following steps.

17. Press the "Start safety commissioning" button.
18. Enter the password for the safety functions.
19. Confirm the prompt for saving your settings (copy RAM to ROM).
20. Disconnect the online connection.
21. Switch off the inverter power supply.
22. Wait until all LEDs on the inverter are dark.
23. Switch the inverter power supply on again.
24. Perform a **reduced** acceptance test.
    Reduced acceptance after a component has been replaced and a firmware change (Page 323)

You have replaced the Control Unit and transferred the safety function settings from the PC to the new Control Unit.
❐

## Replacing the Control Unit with data backup in the operator panel

### Requirement

You have backed up the actual settings of the Control Unit to be replaced to an operator panel.

### Procedure

1. Switch off the inverter power supply voltage.
2. Remove all cables from the inverter.
3. After 5 minutes, check whether the device is in a no-voltage condition.
4. Release the four Power Modules screws.
5. Remove the Power Module.
6. Withdraw the ribbon cable to the CPI module from the Control Unit.
7. Release the four screws from the Control Unit.
8. Remove the defective Control Unit.
9. Mount the new Control Unit. The new Control Unit must have the same article number and the same or higher firmware version as the Control Unit that was replaced.
10. Insert the ribbon cable to the CPI module back into the Control Unit.
11. Mount the Power Module on the Control Unit.
12. Reconnect all of the cables to the inverter.
13. Switch on the power supply voltages again.
14. Connect the handheld operator panel to the inverter.
15. Transfer the settings from the operator panel to the inverter.
16. Wait until the transfer is complete.

17. After loading, check whether the inverter outputs Alarm A01028.
    - Alarm A01028:
      The loaded settings are not compatible with the inverter.
      Set p0971 = 1 to delete the alarm. Check the inverter settings. We recommend that you recommission the drive.
    - No alarm A01028: Proceed with the next step.
18. Switch off the inverter power supply.
19. Wait until all LEDs on the inverter are dark.
20. Switch the inverter power supply on again.
    The inverter reports the faults F01641, F01650, F01680 and F30680. Ignore these faults, as they will be automatically acknowledged by the following steps.
21. Set p0010 to 95.
22. Set p9761 to the safety password.
23. Set p9701 to AC hex.
24. Set p0010 = 0.
25. Back up the settings so they are not lost when the power fails: "SAVE RAM TO ROM".
26. Switch off the inverter power supply.
27. Wait until all LEDs on the inverter are dark.
28. Switch the inverter power supply on again.
29. Perform a **reduced** acceptance test.
    Reduced acceptance after a component has been replaced and a firmware change (Page 323)

You have replaced the Control Unit and transferred the safety function settings from the operator panel to the new Control Unit.
❐

### 7.5.3 Replacing the Control Unit without data backup

If you do not backup the settings, then you must recommission the drive after replacing the Control Unit.

**Procedure**

1. Switch off the inverter power supply voltage.
2. Remove all cables from the inverter.
3. Wait for 5 minutes until the device is in a no-voltage condition.
4. Release the four Power Modules screws.
5. Remove the Power Module.
6. Withdraw the ribbon cable to the CPI module from the Control Unit.
7. Release the four screws from the Control Unit.
8. Remove the defective Control Unit.
9. Mount the new Control Unit.
10. Insert the ribbon cable to the CPI module back into the Control Unit.
11. Mount the Power Module on the Control Unit.
12. Reconnect all of the cables to the inverter.
13. Switch on the power supply voltages again.
14. Recommission the drive.

The Control Unit replacement has been completed once the drive has been successfully commissioned.
❐

### 7.5.4 Replacing a Power Module with enabled safety function

**DANGER**

**Electric shock due to residual charge in the Power Module**

After switching off the line voltage, it will take up to 5 minutes until the capacitors in the Power Module are sufficiently discharged for the residual voltage to be safe. Death or serious injury will result if energized parts are touched.

- Check that the Power Module connections are in a no-voltage condition after you have removed the cables from the Power Module.

**Procedure**

1. Switch off the inverter power supply voltage.
2. Remove all cables from the inverter.
3. After 5 minutes, check whether the device is in a no-voltage condition.
4. Release the four Power Modules screws.
5. Remove the Power Module.
6. If a memory card is inserted in the Power Module, remove the memory card and insert it into the new Power Module.
7. Mount the new Power Module on the Control Unit.
8. Reconnect all of the cables to the inverter.
9. Switch on the power supply voltages again.
10. The inverter reports F01641.
11. Perform a reduced acceptance test.
    Reduced acceptance after a component has been replaced and a firmware change (Page 323)

You have successfully replaced the Power Module.
❐

# 7.6 Replacing the SIMATIC ET 200pro FC-2 inverter

**WARNING**

**Unexpected machine motion after replacing hardware or updating firmware**

The drive can malfunction after replacing drive components or updating the firmware. This can place people at risk or cause material damage.

- Before switching on the power supply voltage again, ensure that nobody is in the dangerous area around the machine.
- Close the protective devices available before you switch on the power supply voltage.
- Check the stability of the closed-loop control, for example, by briefly moving the drive in both directions of rotation.
- Perform a reduced acceptance test.

## 7.6.1 Overview of how to replace an inverter

### Permissible replacement

You must replace the inverter if it continually malfunctions.

If you replace a defective inverter by a new inverter with the same or higher firmware version, the settings of the defective inverter can be loaded to the new inverter.

You must recommission the drive if the defective inverter has a higher firmware version then the new inverter.

## 7.6.2 Replacing a converter with enabled safety function

**WARNING**

**Electric shock due to residual charge in the inverter**

After the power supply has been switched off, it takes up to 5 min. until the capacitors in the inverter have discharged so that the remaining voltage is at a non-hazardous level. Touching live components can result in death or severe injury.

- Check that the inverter connections are in a no-voltage condition before you carry out any installation work.

### Replacing an inverter with data backup on a memory card

**Procedure**

1. Disconnect the line voltage to the inverter.
2. Remove the inverter connecting cables.
3. Remove the defective inverter.
4. Remove the memory card from the old inverter, and insert it into the new inverter.
5. Install the new inverter.
6. Install the connecting cables of the inverter.
7. Switch on the line voltage again.
8. The inverter loads the settings from the memory card.
9. After loading, check whether the inverter outputs Alarm A01028.
   - Alarm A01028:
     The loaded settings are not compatible with the inverter.
     Set p0971 = 1 to delete the alarm. Check the inverter settings. We recommend that you recommission the drive.
   - No alarm A01028:
     Perform a **reduced** acceptance test.
     Reduced acceptance after a component has been replaced and a firmware change (Page 323)

You have replaced the inverter and transferred the safety function settings from the memory card to the new inverter.
❐

### Replacing an inverter with data backup in Startdrive

**Requirement**

You have backed up the actual settings of the inverter to be replaced to a PC using Startdrive.

**Procedure**

1. Disconnect the line voltage to the inverter.
2. Remove the inverter connecting cables.
3. Remove the defective inverter.
4. Install the new inverter.
5. Install the connecting cables of the inverter.
6. Switch on the line voltage again.
7. In Startdrive, open the project that matches the drive.
8. Select "Load to device".
9. Connect Startdrive online with the drive.
   The inverter signals faults after the download. Ignore these faults, as they will be automatically acknowledged by the following steps.
10. Press the "Start safety commissioning" button.
11. Enter the password for the safety functions.
12. Confirm the prompt for saving your settings (copy RAM to ROM).
13. Disconnect the online connection.
14. Switch off the inverter power supply.
15. Wait until all LEDs on the inverter are dark.
16. Switch the inverter power supply on again.
17. Perform a **reduced** acceptance test.
    Reduced acceptance after a component has been replaced and a firmware change (Page 323)

You have replaced the inverter and transferred the safety function settings from the PC to the new inverter.
❐

## Replacing an inverter with data backup in the operator panel

**Procedure**

1. Disconnect the line voltage to the inverter.
2. Remove the inverter connecting cables.
3. Remove the defective inverter.
4. Install the new inverter.
5. Install the connecting cables of the inverter.
6. Switch on the line voltage again.
7. Connect the inverter to the operator panel.
8. Transfer the settings from the operator panel to the inverter.
9. Wait until the transfer is complete.

10. After loading, check whether the inverter outputs Alarm A01028.
    - Alarm A01028:
      The loaded settings are not compatible with the inverter.
      Set p0971 = 1 to delete the alarm. Check the inverter settings. We recommend that you recommission the drive.
    - No alarm A01028: Proceed with the next step.
11. Switch off the inverter power supply.
12. Wait until all LEDs on the inverter are dark.
13. Switch the inverter power supply on again.
    The inverter reports the faults F01641, F01650, F01680 and F30680. Ignore these faults, as they will be automatically acknowledged by the following steps.
14. Set p0010 to 95.
15. Set p9761 to the safety password.
16. Set p9701 to AC hex.
17. Set p0010 = 0.
18. Back up the settings so they are not lost when the power fails: Menu "SAVE RAM TO ROM".
19. Switch off the inverter power supply.
20. Wait until all LEDs on the inverter are dark.
21. Switch the inverter power supply on again.
22. Perform a **reduced** acceptance test.
    Reduced acceptance after a component has been replaced and a firmware change (Page 323)

You have replaced the inverter and transferred the safety function settings from the operator panel to the new inverter.
❐

### 7.6.3 Replacing a converter without data backup

If the settings have not been backed up, after replacing the inverter, you must recommission the drive.

**Procedure**

1. Disconnect the line voltage to the inverter and (if installed) the external 24 V supply or the voltage for the digital outputs of the inverter.
2. Remove the connecting cables of the inverter.
3. Remove the defective inverter.
4. Install the new inverter.
5. Connect all of the cables to the inverter.
6. Reconnect the line voltage, and (if being used) the external 24 V supply or the voltage for the digital outputs of the inverter.
7. Recommission the drive.

Inverter replacement has been completed once it has been commissioned.
❒

## 7.7 Reduced acceptance after a component has been replaced and a firmware change

After a component has been replaced or the firmware updated, a reduced acceptance test of the safety functions must be performed.

Table 7-1 Reduced acceptance test after component replacement

| Measure | Acceptance test | Documentation |
|---|---|---|
| Replacing the Control Unit or the inverter with an identical type | An acceptance test for the safety functions is not required.<br>Only check the direction of rotation of the motor. | • Supplement the inverter data<br>• Document the modified checksum and time stamp [1)]<br>• Countersignature |
| Replacing a Power Module with an identical type | | Supplement the hardware version in the inverter data. |
| Replacing the motor with an identical pole pair number | | No change |
| Replace the gearbox with an identical ratio | | |
| Replacing the Safe Brake Relay | Check the SBC function. | Supplement the hardware version in the inverter data. |
| Replacing safety-related I/O devices (e.g. Emergency Stop switch). | Check the control of the safety functions affected by the components that have been replaced. | No change |
| Inverter firmware update | An acceptance test for the safety functions is not required.<br>Check as to whether the firmware update was successful and the inverter functions as expected. | • Supplement firmware version in the inverter data<br>• Document the modified checksum and time stamp [1)]<br>• Countersignature |

[1)] The inverter changes the following parameters after replacing inverter components and after a firmware update:

- checksum r9781

- time stamp r9782

Acceptance tests for the safety functions (Page 171)

# System properties 8

## 8.1 About this chapter

### What can you find in this Chapter?

In this chapter, you will find answers to the following questions:

- How long may I operate my inverter?
- In what time intervals must I initiate an inverter self test?
- What are the probabilities of failure of the safety functions of my inverter?
- How long does it take for my drive to respond when selecting a safety function?
- How long does it take for my drive to respond when the safety function is active and the motor malfunctions?
- According to which standards are the safety functions of my inverter certified?
- Where can I find the inverter certificate?
- What are the technical data of the Safe Brake Relay?

## 8.2 Probability of failure of the safety functions (PFH value)

The specified probability of failure values apply under the following preconditions:

- The mission time of the inverter has not expired.
- The test interval has not expired.

### Mission time

You may not operate inverters with integrated safety functions for longer than 20 years. The 20 years starts when the device is delivered. The mission time cannot be extended. This is the case even if a service department checks the inverter – or in the meantime, the inverter was decommissioned.

### Test interval

You must test the safety-related circuits of the inverter at least once every year. This process is called "forced checking procedure" or "test stop".

Regularly testing the safety functions (Page 176).

### Probability of failure

Table 8-1 Probability of failure of the safety functions

| Safety function | PFH, $PFH_D$ [1] | PFD [2] |
|---|---|---|
| STO, SBC [3], SS1, SLS, SDI, SSM | $5\times10^{-8}$ 1/h | $5\times10^{-3}$ |

[1] PFH, $PFH_D$: Probability of failures per hour.
PFH according to IEC 61800-5-2, $PFH_D$ according to IEC 62061.

[2] PFD: For a low demand rate of the safety function: Mean probability of dangerous failure when the safety function is demanded according to IEC 61508.

[3] Including Safe Brake Relay

The machine manufacturer must specify a probability of failure in the form of a PFH value for every safety function of a machine.

The integrated inverter safety functions are only ever part of a complete machine safety function. A complete safety function comprises the following components, for example:

- A dual-channel sensor for detecting an open protective door.
- A central failsafe controller for processing the sensor signal further.
- An inverter for safely stopping (SS1) a motor if a protective door is opened.

IEC 62061 explains how to calculate the $PFH_D$ value for the complete safety function from the $PFH_D$ values of the components used for the safety function.

You can find a free-of-charge tool in the Internet to calculate the $PFH_D$ value of a complete machine:

Safety Evaluation Tool (www.siemens.com/safety-evaluation-tool).

Application examples for the probability of failure PFH and PFD are available in the Internet:

Application example (http://support.automation.siemens.com/WW/view/en/76254308).

# 8.3 Certification

## Certifications

The safety functions fulfill the following requirements:

| "STO via Power Module terminals"<br>Control via terminals STO_A and STO_B in the SINAMICS G120 PM240-2 or PM240P-2 Power Module, FSD ... FSF | All other safety functions of the SINAMICS G110M, G120, G120C, G120D inverters and SIMATIC ET 200pro FC-2 converters |
|---|---|
| • Category 3 and Performance Level (PL) e according to EN ISO 13849-1: 2008<br>• Safety integrity level 3 (SIL 3) to IEC 61508: 2010<br>• EC Declaration of Conformity | • Category 3 and Performance Level (PL) d according to EN ISO 13849-1: 2008<br>• Safety integrity level 2 (SIL 2) to IEC 61508: 2010<br>• EC Declaration of Conformity |

## EC type-examination certificate and manufacturer declaration

The safety functions integrated in the drive are certified by a test institute for each of the firmware versions that have been released. With the EC type-examination certificate, the test institute confirms that the safety functions comply with the requirements as laid down in EN ISO 13849-1 and IEC 61508.

We provide a manufacturer's declaration for the transition period from releasing a firmware version up to the test institute issuing an EC type-examination certificate. The manufacturer declaration confirms that the safety functions are in conformance with the appropriate standards.

### Procedure

Proceed as follows, to load the certificates relevant for Safety Integrated from the Internet:

1. Open the following page in the Internet:
   Certificates (http://support.automation.siemens.com/WW/view/en/36426537/134200)
2. Filter according to Certificate type "Functional safety/machine safety".
3. Select the certificate according to the inverter article number.
   – There is an EC type-examination certificate and a manufacturer declaration for each inverter family.
   – Each certificate includes lists with the associated firmware and hardware.

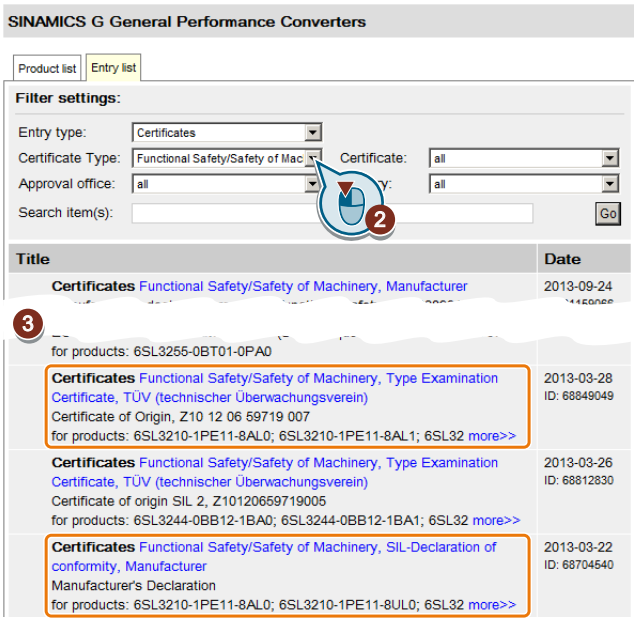


You have loaded certificates relevant for Safety Integrated from the Internet.
❐

## EC Declaration of Conformity

According to Annex IV of the machinery directive, drives equipped with Safety Integrated are defined as "Logic units for safety functions" and therefore as a safety component. The machinery directive specifies that safety components should be handled just like machines. As a consequence, safety components require a CE marking.

As machine builder, you must provide documentation that you create for the CE marking of the machine, together with the EC Declaration of Conformity for the products that have been installed.

The current EC Declarations of Conformity for the inverter are in the Internet:

EC Declaration of Conformity (http://support.automation.siemens.com/WW/view/en/67385845)

# 8.4 Safe Brake Relay

## Technical data of the Safe Brake Relay

| Technical data | Property |
|---|---|
| **Supply voltage** | 20.4 to 28.8 V DC<br>We recommend that you use a power supply with a minimum rated voltage of 26 V in order to compensate for voltage drops along the brake cable. |
| **Current drawn at 24 V DC** | 0.05 A + the current drawn by the motor brake |
| **Maximum current** | 2 A |
| **Conductor cross section, max.** | 2.5 $mm^2$ |
| **Dimensions** (W x H x D) | 69 mm x 63 mm x 33 mm |
| **Weight** | approx. 0.17 kg |

# 8.5 Response times after selection

## 8.5.1 General information

The response times depend on the following conditions:

- Safety function setting
  - Basic function
  - Extended function
- PROFIBUS or PROFINET
- Selection via the fail-safe digital input or PROFIsafe.

The "worst case values" in the following tables mean the following:

| | |
|---|---|
| Worst case for a fault-free inverter: | The response time is less than or equal to the specified value. |
| Worst case for an inverter fault: | The response time is less than or equal to the specified value. The response time is applicable for fault causes within the inverter itself, e.g. for a defective microprocessor. |

## 8.5.2 Safe Torque Off (STO) and Safe Brake Control (SBC)

The response time of the STO function is the time between selecting the function and the function becoming active.

### Response times when selected via PROFIsafe

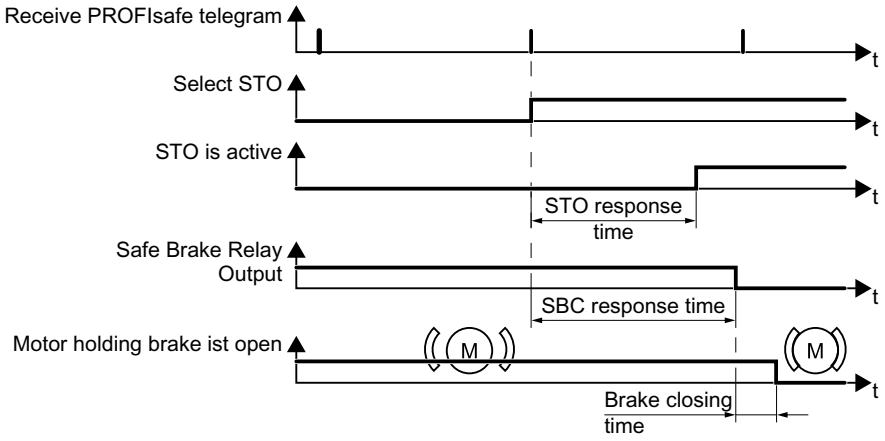


Figure 8-1 Response times when selected via PROFIsafe

Table 8-2 Response times when using the basic functions

| Function | Selection via | Response | Response time | |
|---|---|---|---|---|
| | | | Worst case for a fault-free inverter | Worst case for an inverter fault |
| STO | PROFIBUS | STO is active | 14 ms | 14 ms |
| | PROFINET | | 14 ms + bus cycle time [1] | 14 ms + bus cycle time [1] |
| SBC | PROFIBUS | Signal change at the output of the Safe Brake Relay | 16 ms | 30 ms |
| | PROFINET | | 16 ms + bus cycle time [1] | 30 ms + bus cycle time [1] |

[1] Bus cycle time: Time for cyclic data exchange via PROFINET

Table 8-3 Response times when using the extended functions

| Function | Selection via | Response | Response time | |
|---|---|---|---|---|
| | | | Worst case for a fault-free inverter | Worst case for an inverter fault |
| STO | PROFIBUS | STO is active | 54 ms | 56 ms |
| | PROFINET | | 54 ms + bus cycle time [1] | 56 ms + bus cycle time [1] |
| SBC | PROFIBUS | Signal change at the output of the Safe Brake Relay | 56 ms | 62 ms |
| | PROFINET | | 56 ms + bus cycle time [1] | 62 ms + bus cycle time [1] |

[1] Bus cycle time: Time for a cyclic data exchange via PROFINET.

## Response times when selected via a fail-safe digital input

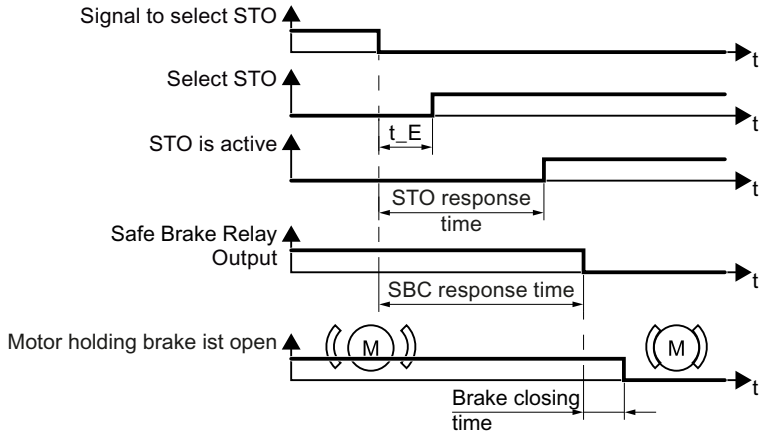


Figure 8-2 Response times when selected via a fail-safe digital input

Table 8-4 Response times when using the basic functions

| Function | Selection via | Response | Response time | |
|---|---|---|---|---|
| | | | Worst case for a fault-free inverter | Worst case for an inverter fault |
| STO | F-DI | STO is active | 4 ms + t_E [1] | 6 ms + t_E [1] |
| | Terminals STO_A, STO_B on the PM240-2 or PM240P-2 Power Module. | | 20 ms | --- |
| SBC | F-DI | Signal change at the output of the Safe Brake Relay | 8 ms + t_E [1] | 22 ms + t_E [1] |
| | Terminals STO_A, STO_B on the PM240-2 or PM240P-2 Power Module. | | 24 ms | --- |

[1] When p9651 > 0: t_E = p9651 + 3 ms; p9651: Delays
When p9651 = 0: t_E = 4 ms

Table 8-5 Response times when using the extended functions

| Function | Selection via | Response | Response time | |
|---|---|---|---|---|
| | | | Worst case for a fault-free inverter | Worst case for an inverter fault |
| STO | F-DI | STO is active | 50 ms + t_E [1] | 52 ms + t_E [1] |
| SBC | | Signal change at the output of the Safe Brake Relay | 52 ms + t_E [1] | 60 ms + t_E [1] |

[1] When p10017 > 0: t_E = p10017 + 3 ms; p10017: Debounce time
When p10017 = 0: t_E = 4 ms

### 8.5.3 Safe Stop 1 (SS1) and Safe Brake Control (SBC)

The response time of the SS1 function is the time between selecting the SS1 function and the STO function becoming active.

#### Response times when selected via PROFIsafe

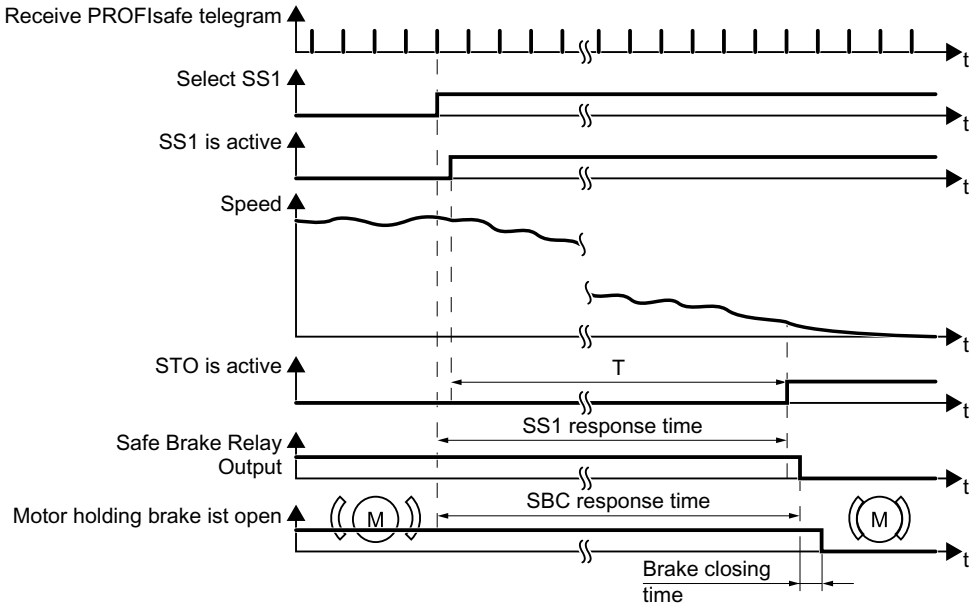


Figure 8-3 Response times when selected via PROFIsafe

Table 8-6 Response times when using the basic functions

| Function | Selection via | Response | Response time | |
|---|---|---|---|---|
| | | | Worst case for a fault-free inverter | Worst case for an inverter fault |
| SS1 | PROFIBUS | STO is active | 14 ms + T [2] | 14 ms + T [2] |
| | PROFINET | | 14 ms + T [2] + bus cycle time[1] | 14 ms + T [2] + bus cycle time[1] |
| SBC | PROFIBUS | Signal change at the output of the Safe Brake Relay | 16 ms + T [2] | 30 ms + T [2] |
| | PROFINET | | 16 ms + T [2] + bus cycle time[1] | 30 ms + T [2] + bus cycle time[1] |

[1] Bus cycle time: Time for cyclic data exchange via PROFINET

[2] T = p9652

Table 8-7 Response times when using the extended functions

| Function | Selection via | Response | Response time | |
|---|---|---|---|---|
| | | | Worst case for a fault-free inverter | Worst case for an inverter fault |
| SS1 | PROFIBUS | STO is active | 54 ms + T [2] | 56 ms + T [2] |
| | PROFINET | | 54 ms + T [2] + bus cycle time[1] | 56 ms + T [2] + bus cycle time[1] |
| SBC | PROFIBUS | Signal change at the output of the Safe Brake Relay | 56 ms + T [2] | 62 ms + T [2] |
| | PROFINET | | 56 ms + T [2] + bus cycle time[1] | 62 ms + T [2] + bus cycle time[1] |

[1] Bus cycle time: Time for cyclic data exchange via PROFINET

[2] T depends on how safety function SS1 is set:

- SS1 with braking ramp monitoring: T = p9582 + time to brake down to standstill detection
- SS1 with acceleration monitoring: T = the lower of the two times:
  - p9556
  - Time to brake down to standstill detection

## Response times when selected via a fail-safe digital input of the Control Unit

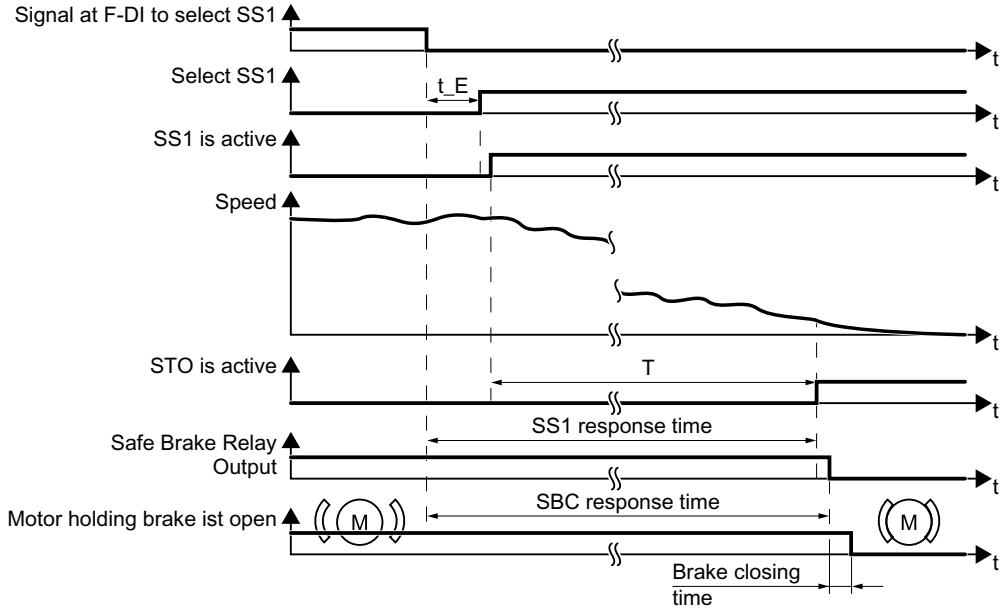


Figure 8-4 Response times when selected via a fail-safe digital input F-DI

Table 8-8 Response times when using the basic functions

| Function | Selection via | Response | Response time | |
|---|---|---|---|---|
| | | | Worst case for a fault-free inverter | Worst case for an inverter fault |
| SS1 | F-DI | STO is active | 4 ms + T [2] + t_E [1] | 6 ms + T [2] + t_E [1] |
| SBC | | Signal change at the output of the Safe Brake Relay | 8 ms + T [2] + t_E [1] | 22 ms + T [2] + t_E [1] |

[1] T = p9652

[2] When p9651 > 0: t_E = p9651 + 3 ms; p9651: Delays
When p9651 = 0: t_E = 4 ms

Table 8-9 Response times when using the extended functions

| Function | Selection via | Response | Response time | |
|---|---|---|---|---|
| | | | Worst case for a fault-free inverter | Worst case for an inverter fault |
| SS1 | F-DI | STO is active | 50 ms + T [2] + t_E [1] | 52 ms + T [2] + t_E [1] |
| SBC | | Signal change at the output of the Safe Brake Relay | 52 ms + T [2] + t_E [1] | 60 ms + T [2] + t_E [1] |

[1] When p10017 > 0: t_E = p10017 + 3 ms; p10017: Debounce time
When p10017 = 0: t_E = 4 ms

[2] T depends on how safety function SS1 is set:

- SS1 with braking ramp monitoring: T = p9582 + time to brake down to standstill detection
- SS1 with acceleration monitoring: T = the lower of the two times:
  - p9556
  - Time to brake down to standstill detection

# 8.6 Response times when a monitoring function responds

## Response times when limit values are violated

Table 8-10 Response times

| Function | Response | Response times | |
|---|---|---|---|
| | | Worst case for a fault-free drive system | Worst case when a fault exists |
| SS1 | STOP A | 67 ms [1] | 101 ms [1] |
| SLS | STOP A or STOP B | 67 ms [1] | 113 ms [1] |
| SDI | STOP A or STOP B | 61 ms [1] | 107 ms [1] |
| SSM | Signal change in PROFIsafe bit S_STW1.7 | 101 ms [1] | 135 ms [1] |
| | Forced checking procedure of the fail-safe output F_DO: | 77 ms [1] | 113 ms [1] |

[1] Immediately after switching-on the motor, the response times are extended by p9586 (Delay time actual value sensing).

## Response time after PROFIsafe communication interruption

The inverter receives the PROFIsafe monitoring time from the higher-level-level, fail-safe control (F-CPU).

If the PROFIsafe telegram is not received before the end of the PROFIsafe monitoring time, the inverter activates the STO function.

Depending when the interruption takes place, the inverter can signal the following faults:

- Basic functions have been enabled: Fault F01611
- Extended functions have been enabled: Message C01711

# Appendix A

## A.1 About this chapter

### What can you find in this Chapter?

In this chapter, you will find answers to the following questions:

- What does a typical acceptance for safety functions look like?
- As machine manufacturer or company operating a machine, what standards and regulations must I observe?
- Where can I find more information on my inverter?

# A.2 Examples of acceptance tests

For the acceptance test, check whether the safety functions in the inverter have been set correctly. The following acceptance tests are examples which demonstrate the basic procedure. They are not suitable for every possible setting of the inverter.

## Recommendations for the acceptance test

- Perform the acceptance test with the maximum possible velocity and acceleration to test the expected maximum braking distances and braking times.
- The trace function in the Startdrive PC tool can simplify the acceptance test in certain applications: for example, if a drive in the machine is difficult to access. Therefore, we recommend that you use the trace function for some acceptance tests.
- If you have recorded a trace for an acceptance test, you have to proceed as follows:
  - When you save the trace, enter the storage location in the acceptance report.
  - If you print the trace, append the printout to the acceptance report.
- If you can carry out the acceptance test without the trace function, there is no need to use the trace.
- Alarm A01697:
  This alarm is issued following each system startup and is not critical for acceptance.

After the acceptance test of the inverter's safety functions, you must also check whether the safety-related functions in the machine or system are functioning correctly.

Acceptance - completion of commissioning (Page 171)

## A.2.1 Acceptance test STO (basic functions)

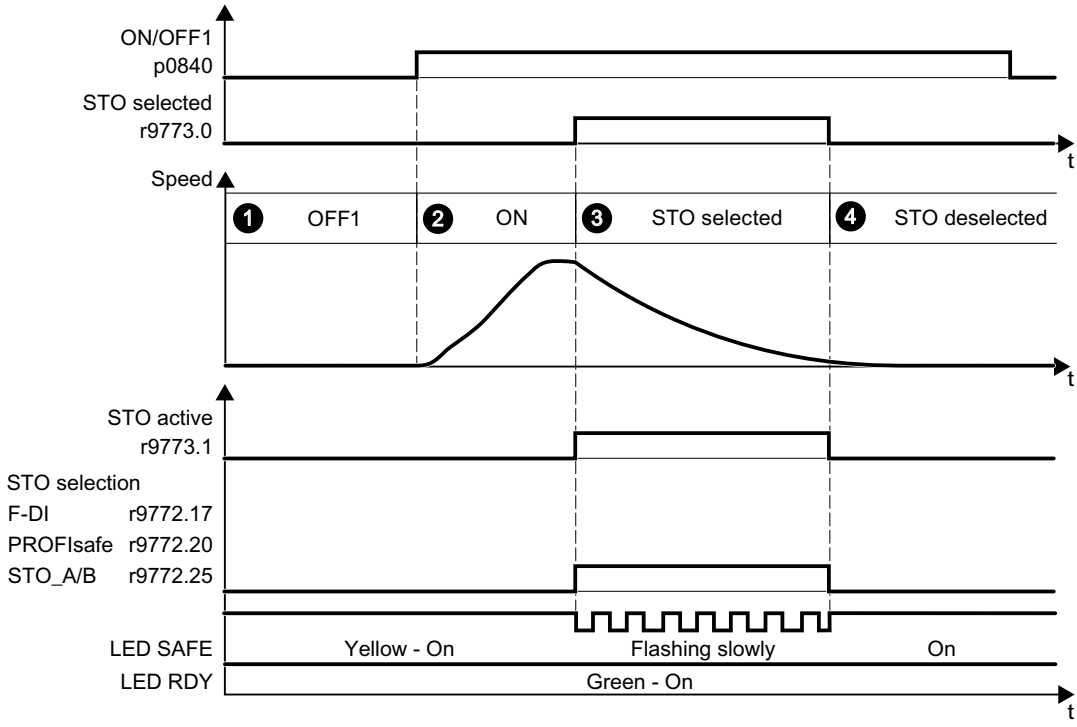


Figure A-1 Acceptance test for STO (Basic Functions)

### Procedure

| | | | Status |
|---|---|---|---|
| 1. | **The inverter is ready** | | |
| | • The inverter signals neither faults nor alarms of the safety functions (r0945[0…7], r2122[0…7]). | | |
| | • STO is not active (r9773.1 = 0). | | |
| 2. | **Switch on motor** | | |
| | 2.1. | Enter a speed setpoint ≠ 0. | |
| | 2.2. | Switch on the motor (ON command). | |
| | 2.3. | Check that the correct motor is running. | |

| | | | | | Status |
|---|---|---|---|---|---|
| 3. | **Select STO** | | | | |
| | 3.1. | Select STO while the motor is running.<br>*Test each configured activation, e.g. via digital inputs and PROFIsafe.* | | | |
| | 3.2. | Check the following: | | | |
| | | When controlled via PROFIsafe | When controlled via an F-DI failsafe digital input | When controlled via STO_A and STO_B terminals on a PM240-2 or PM240P-2 Power Module | |
| | | • The inverter signals the following:<br>"STO selection via PROFIsafe"<br>(r9772.20 = 1) | • The inverter signals the following:<br>"STO Selection via terminal"<br>(r9772.17 = 1) | • The inverter signals the following:<br>"STO Selection via terminal on Power Module"<br>(r9772.25 = 1) | |
| | | • If a mechanical brake is not available, the motor coasts down.<br>A mechanical brake brakes the motor and holds it to ensure that it remains at standstill. | | | |
| | | • The inverter signals neither faults nor alarms of the safety functions (r0945[0…7], r2122[0…7]). | | | |
| | | • The inverter signals the following:<br>"STO is selected" (r9773.0 = 1).<br>"STO is active" (r9773.1 = 1). | | | |
| 4. | **Deselect STO** | | | | |
| | 4.1. | Deselect STO. | | | |
| | 4.2. | Check the following: | | | |
| | | • STO is not active (r9773.1 = 0). | | | |
| | | • The inverter signals neither faults nor alarms of the safety functions (r0945[0…7], r2122[0…7]). | | | |

You have performed the acceptance test of the STO function.
❒

## A.2.2 Acceptance test STO (extended functions)

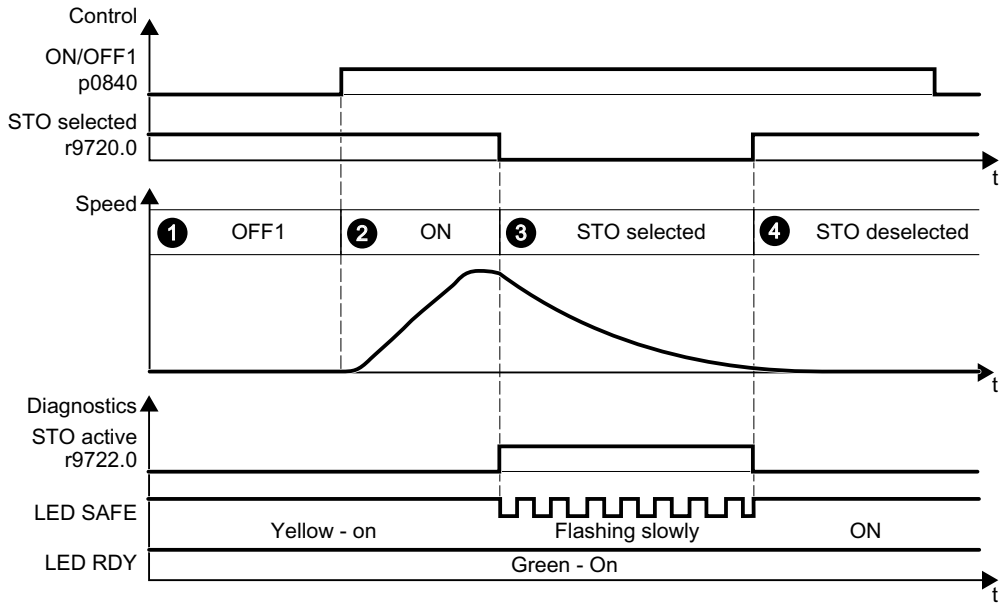


Figure A-2 Acceptance test for STO (Extended Functions)

### Procedure

| | | | Status |
|---|---|---|---|
| 1. | **The inverter is ready** | | |
| | • The inverter signals neither faults nor alarms of the safety functions (r0945[0…7], r2122[0…7]). | | |
| | • STO is not active (r9722.0 = 0). | | |
| 2. | **Switch on motor** | | |
| | 2.1. | Enter a speed setpoint ≠ 0. | |
| | 2.2. | Switch on the motor (ON command). | |
| | 2.3. | Check that the correct motor is running. | |
| 3. | **Select STO** | | |
| | 3.1. | Select STO while the motor is running. | |
| | 3.2. | Check the following: | |
| | | • If a mechanical brake is not available, the motor coasts down.<br>A mechanical brake brakes the motor and holds it to ensure that it remains at standstill. | |
| | | • The inverter signals neither faults nor alarms of the safety functions (r0945[0…7], r2122[0…7]). | |
| | | • The inverter signals the following: "STO is active" (r9722.0 = 1). | |

| | | | Status |
|---|---|---|---|
| 4. | **Deselect STO** | | |
| | 4.1. | Deselect STO. | |
| | 4.2. | Check the following: | |
| | | • STO is not active (r9722.0 = 0). | |
| | | • The inverter signals neither faults nor alarms of the safety functions (r0945[0…7], r2122[0…7]). | |

You have performed the acceptance test of the STO function.
❒

## A.2.3 SS1 acceptance test (basic functions)

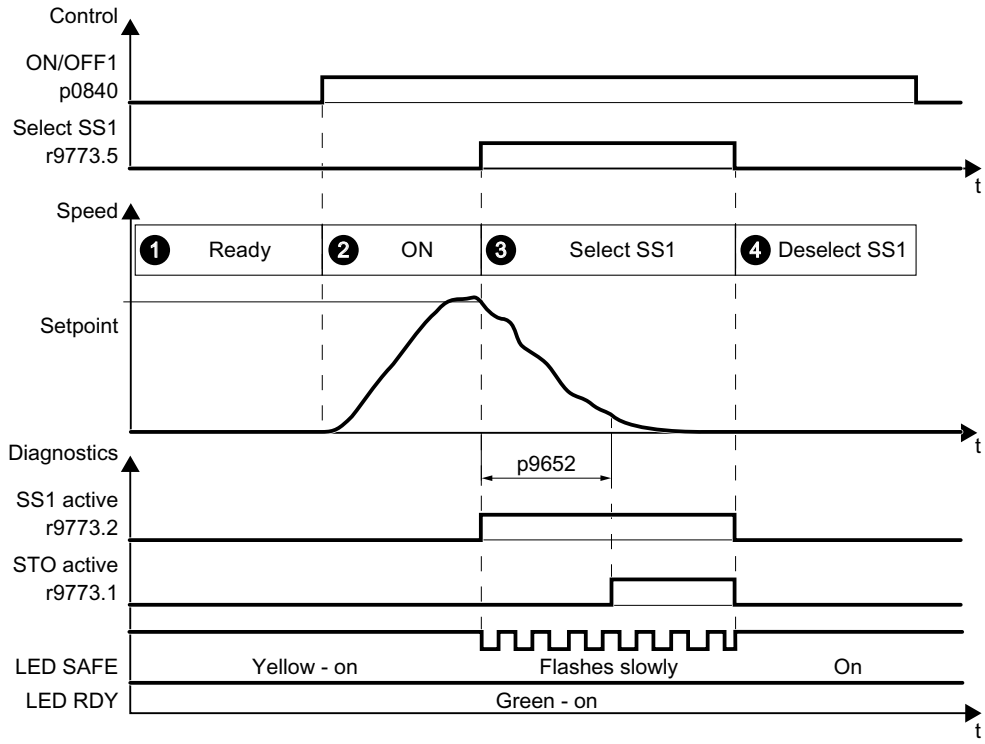


Figure A-3 SS1 acceptance test for Basic Functions

### Procedure

| | | | Status |
|---|---|---|---|
| 1. | **The inverter is ready** | | |
| | Check the following: | | |
| | • The inverter signals neither faults nor alarms of the safety functions (r0945[0…7], r2122[0…7]). | | |
| | • SS1 is not active (r9773.6 = 0). | | |
| 2. | **Switch on motor** | | |
| | 2.1. | Enter a speed setpoint ≠ 0. | |
| | 2.2. | Switch on the motor (ON command). | |
| | 2.3. | Check that the correct motor is running. | |
| 3. | **Select SS1** | | |
| | 3.1. | Select SS1 while the motor is switched on.<br>*Test each configured activation, e.g. via digital inputs and PROFIsafe.* | |
| | 3.2. | In your machine, check the following: | |
| | | • The motor brakes on the OFF3 ramp. | |
| | | • SS1 is active (r9773.6 = 1). | |
| | | • After the p9652 time has expired, the inverter signals: "STO is active" (r9773.1 = 1). | |

| | | | Status |
|---|---|---|---|
| 4. | **Deselect SS1** | | |
| | 4.1. | Deselect SS1. | |
| | 4.2. | Check the following: | |
| | | • SS1 is not active (r9773.6 = 0). | |
| | | • The inverter signals neither faults nor alarms of the safety functions (r0945[0…7], r2122[0…7]). | |

You have completed the acceptance test of the SS1 function.
❒

## A.2.4 SS1 acceptance test (extended functions)

The two diagrams show the recommended steps to take during the acceptance test. The behavior of the drive differs according to the settings you have made for SS1:

- Diagram 1: After SS1 has been selected, the inverter monitors the speed using braking ramp monitoring.
- Diagram 2: After SS1 has been selected, the inverter monitors the speed using the acceleration monitoring.

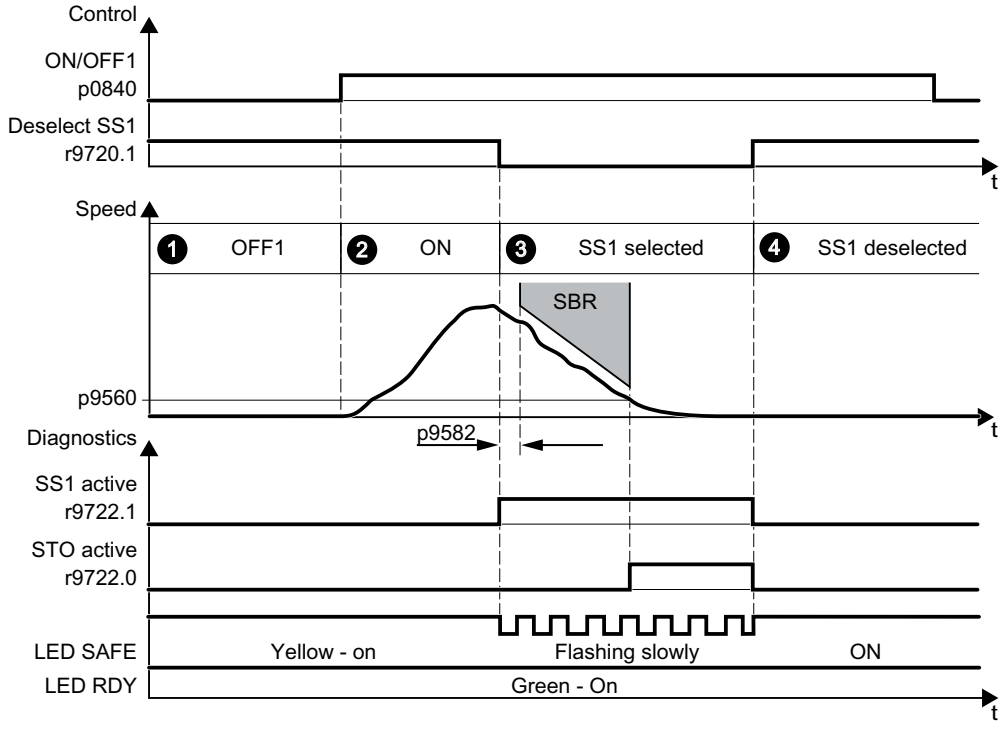


Figure A-4 Diagram 1 - acceptance test SS1 with braking ramp monitoring

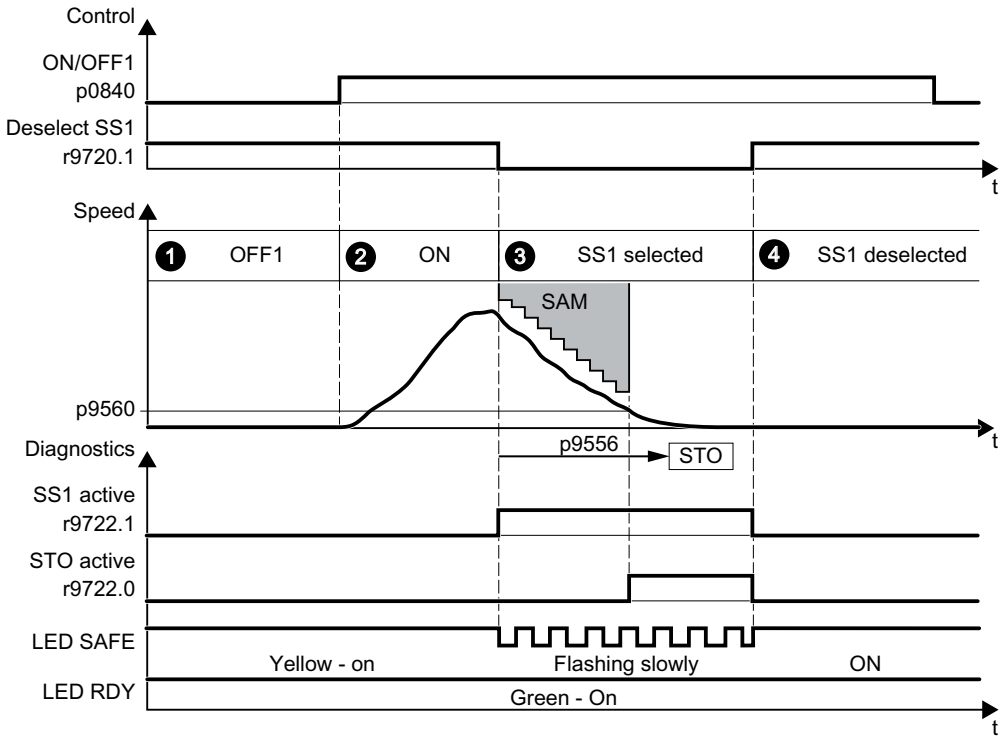


Figure A-5 Diagram 2 - acceptance test for SS1 with acceleration monitoring

## Procedure

| | | | Status |
|---|---|---|---|
| 1. | **The inverter is ready** | | |
| | • The inverter signals neither faults nor alarms of the safety functions (r0945[0…7], r2122[0…7]). | | |
| | • SS1 is not active (r9722.1 = 0). | | |
| | Go online with the STARTER and configure the following trace:<br>• Trigger on variable - bit pattern (r9720.1 = 0)<br>• Record the following values: r9714[0], r9714[1], r9722<br>Display the bits r9722.0/.1<br>• Select the time interval and pretrigger so you can recognize the selection of SS1 and the transition into the subsequent STO state.<br>• Start the trace. | | |
| 2. | **Switch on motor** | | |
| | 2.1. | Enter a speed setpoint ≠ 0. | |
| | 2.2. | Switch on the motor (ON command). | |
| | 2.3. | Check that the correct motor is running. | |

| | | | Status |
|---|---|---|---|
| 3. | **Select SS1** | | |
| | 3.1. | Select SS1 while the motor is switched on.<br>*Test each configured activation, e.g. via digital inputs and PROFIsafe.* | |
| | 3.2. | Check: The inverter signals neither faults nor alarms of the safety functions (r0945[0…7], r2122[0…7]). | |
| | 3.3. | Analyze the trace. | |
| | | • SS1 is active after selecting SS1 (r9722.1 = 1). | |
| | | • The motor brakes on the OFF3 ramp. | |
| | | • STO becomes active if the velocity drops below the shutdown velocity p9560 (r9722.0 = 1). | |
| | | • The recorded curves of r9714[0] and r9714[1] are approximately parallel. | |
| 4. | **Deselect SS1** | | |
| | 4.1. | Deselect SS1. | |
| | 4.2. | Check the following: | |
| | | • SS1 is not active (r9722.1 = 0). | |
| | | • The inverter signals neither faults nor alarms of the safety functions (r0945[0…7], r2122[0…7]). | |

You have completed the acceptance test of the SS1 function.
❐

## Example of a trace

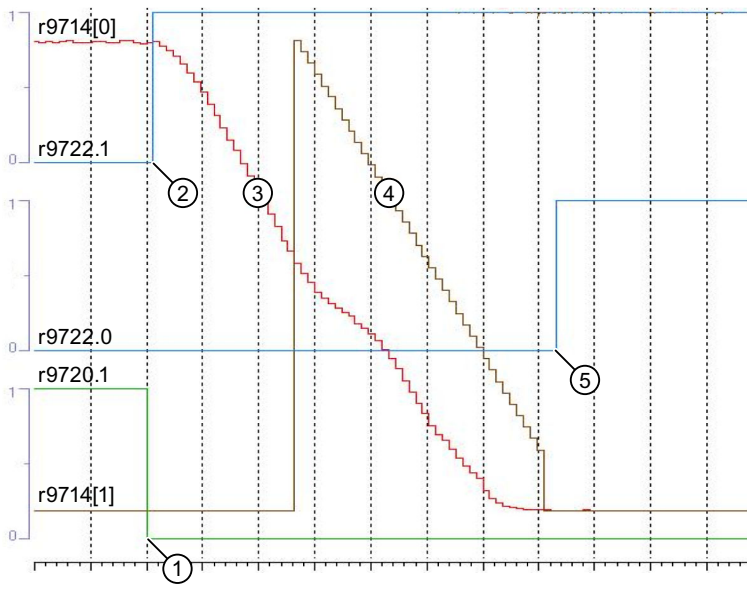


① SS1 is selected
② SS1 is active
③ Speed: The motor brakes on the OFF3 ramp.
④ Monitoring the speed when braking
⑤ STO is active

## A.2.5 SBC acceptance test

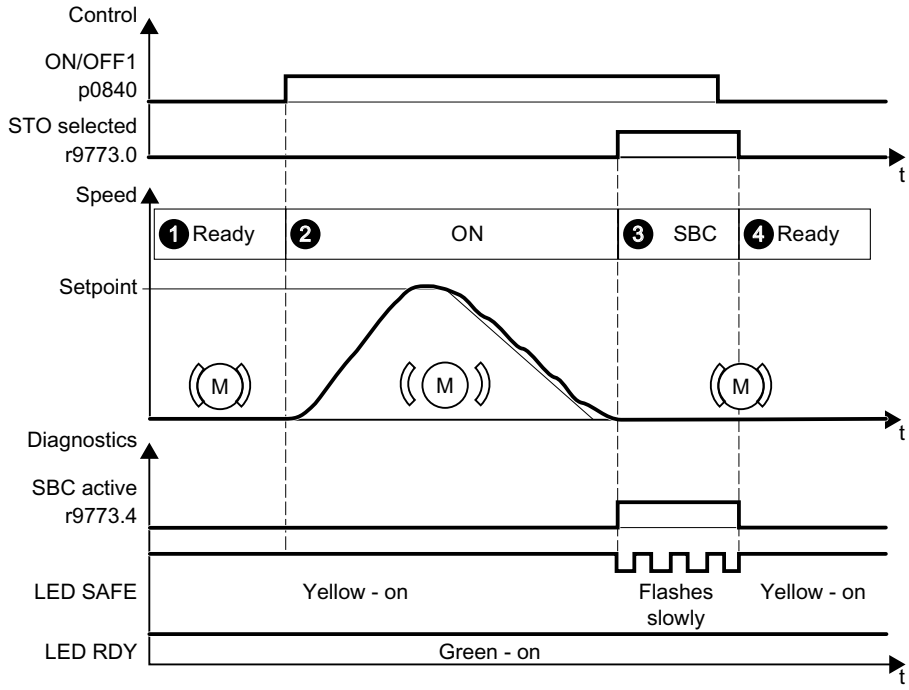


Figure A-6 Acceptance test for SBC

### Procedure

| | | | Status |
|---|---|---|---|
| 1. | **The inverter is ready** | | |
| | • The inverter signals neither faults nor alarms of the safety functions (r0945[0…7], r2122[0…7]). | | |
| | • SBC is not active (r9773.4 = 0). | | |
| 2. | **Switch on motor** | | |
| | 2.1. | Enter a speed setpoint ≠ 0. | |
| | 2.2. | Switch on the motor (ON command). | |
| | 2.3. | Check that the correct motor is running. | |
| | 2.4. | Enter a speed setpoint = 0. | |
| 3. | **Select SBC** | | |
| | 3.1. | Select the STO function or the SS1 function. | |
| | 3.2. | Check: The inverter signals "SBC is active" (r9773.4 = 1). | |
| 4. | **inverter is ready** | | |
| | 4.1. | Deselect STO. | |
| | 4.2. | Check the following: | |
| | | • The inverter signals "SBC is not active" (r9773.4 = 0). | |
| | | • The inverter signals neither faults nor alarms of the safety functions (r0945[0…7], r2122[0…7]). | |

You have performed the acceptance test of the SBC function.
❐

## A.2.6 Acceptance test SLS

The two diagrams show the recommended steps to take during the acceptance test. The behavior of the drive differs according to the settings you have made for SLS :

- Diagram 1: With a limit value violation, the drive responds with a STOP A.
- Diagram 2: With a limit value violation, the drive responds with a STOP B.

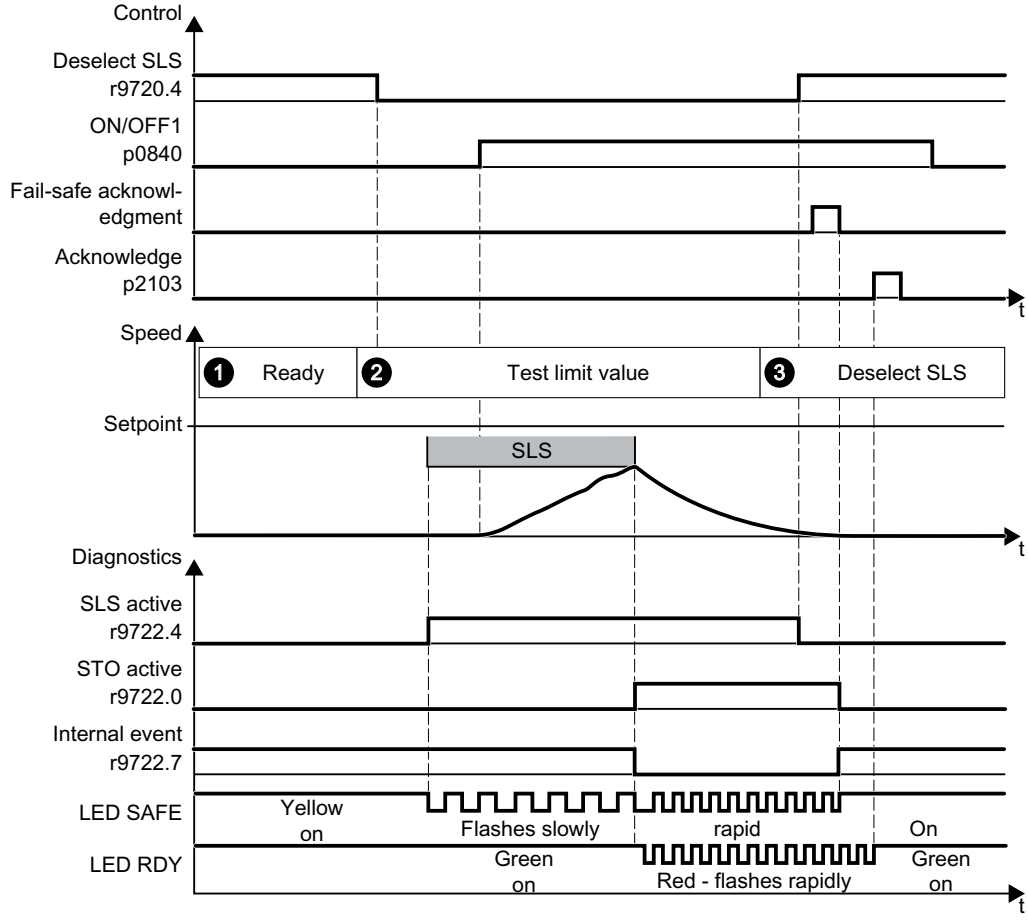


Figure A-7 Diagram 1 - acceptance test for SLS with stop response STOP A

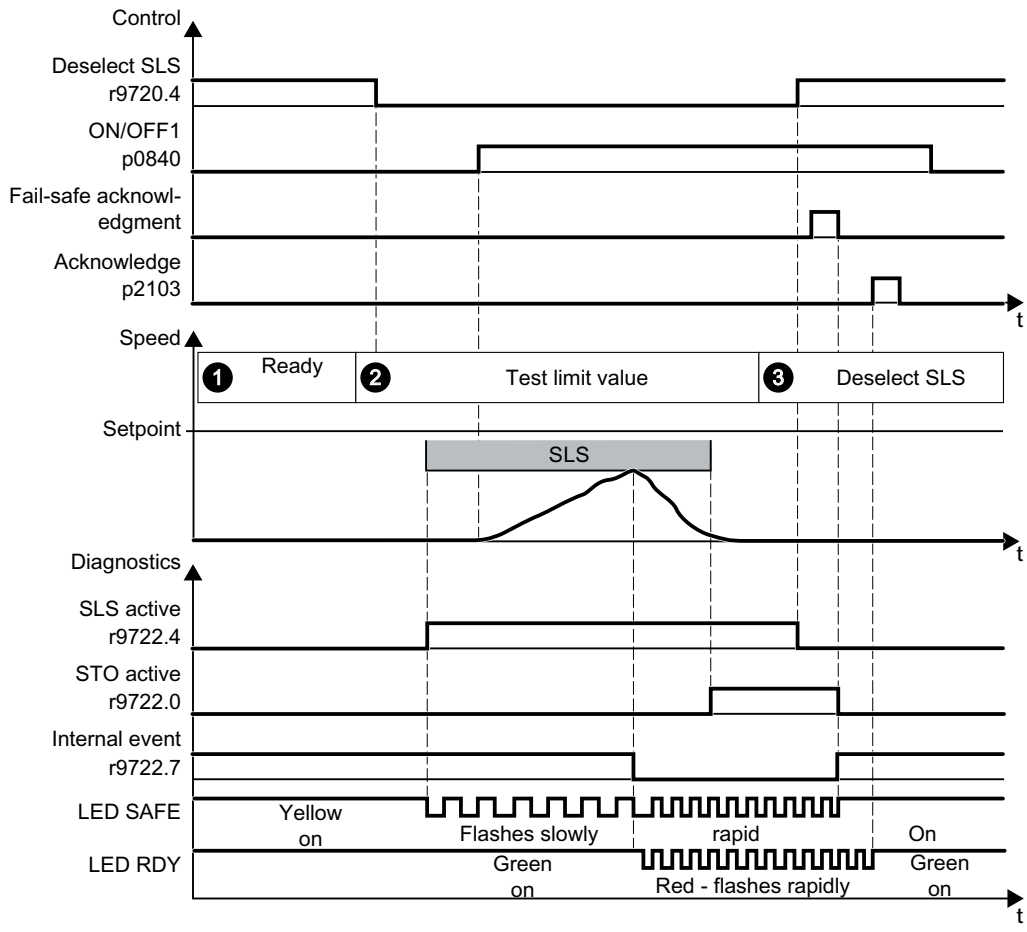


Figure A-8 Diagram 2 - acceptance test SLS with stop response STOP B

## Procedure

| | | Status |
|---|---|---|
| If you are using multiple SLS levels, repeat the test for each of the SLS levels. | | |
| 1. | **The inverter is ready** | |
| | Check the following: | |
| | • The inverter signals neither faults nor alarms of the safety functions (r0945[0…7], r2122[0…7]). | |
| | • SLS is not active (r9722.4 = 0). | |
| | Go online with the STARTER and configure the following trace:<br>• Trigger on variable - bit pattern (r9722.7 = 0)<br>• Record the following values: r9714[0], r9714[1], r9722<br>Display the bits r9722.0/.4/.7/.9/.10<br>• Select the interval and pretrigger so you can recognize when the active SLS limit has been exceeded and the subsequent drive responses. | |

| | | | | Status |
|---|---|---|---|---|
| 2. | **Switch on motor** | | | |
| | 2.1. | Enter a speed setpoint > SLS level. | | |
| | 2.2. | Select SLS with the SLS level to be tested. | | |
| | 2.3. | Activate the acceptance mode:<br> 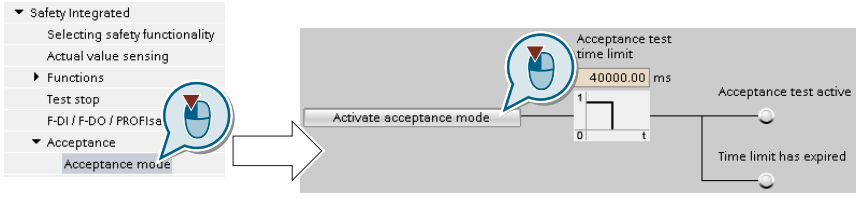 <br> | | |
| | | CAUTION<br>**Unexpected high motor speed**<br>In the following test, speed limitation of the SLS function is deactivated. The increased motor speed can lead to material damage or physical injury.<br>• For this test, secure dangerous machine parts using barriers, for example. | | |
| | 2.4. | Switch on the motor within 5 seconds after selecting SLS (ON command).<br>*If you wait longer than 5 seconds for the ON command, then STO is activated. In this case, deselect SLS and then select it again.* | | |
| | 2.5. | Check that the correct motor is running. | | |
| | | *The following tests depend on how you have set the SLS function during commissioning:* | | |
| | | *Diagram 1:*<br>*The inverter responds with STOP A in the event of a limit value violation.* | *Diagram 2:*<br>*The inverter responds with STOP B in the event of a limit value violation.* | |
| | 2.6. | The inverter signals the following:<br>• C01714 and C30714 (safe velocity limit exceeded)<br>• C01700 and C30700 (STOP A initiated) | The inverter signals the following:<br>• C01714 and C30714 (safe velocity limit exceeded)<br>• C01701 and C30701 (STOP B initiated)<br>• C01700 and C30700 (STOP A initiated) | |
| | 2.7. | Analyze the trace. | | |
| | | • After SLS is selected, the inverter signals "SLS is active" (r9722.4 = 1). | | |
| | | • The inverter signals the selected SLS level (r9722.9 and r9722.10). | | |
| | | • If r9714[0] exceeds the active SLS limit, the inverter signals an internal event (r9722.7 = 0). | | |
| | | *STOP A in the event of a limit value violation* | *STOP B in the event of a limit value violation* | |
| | | • If r9714[0] exceeds the active SLS limit, the motor coasts down to a standstill (r9722.0 = 1). | • If r9714[0] exceeds the active SLS limit, the motor brakes on the OFF3 ramp (r9722.1 = 1). | |
| | | | • After braking, STO is active (r9722.0 = 1). | |

| | | | Status |
|---|---|---|---|
| 3. | **Deselect SLS** | | |
| | 3.1. | Deselect SLS. | |
| | 3.2. | Check: SLS is not active (r9722.4 = 0). | |
| | 3.3. | Acknowledge the messages for the safety functions. | |

You have performed the acceptance test of the SLS function.
❒

## Example of a trace (STOP B in the event of a limit violation)

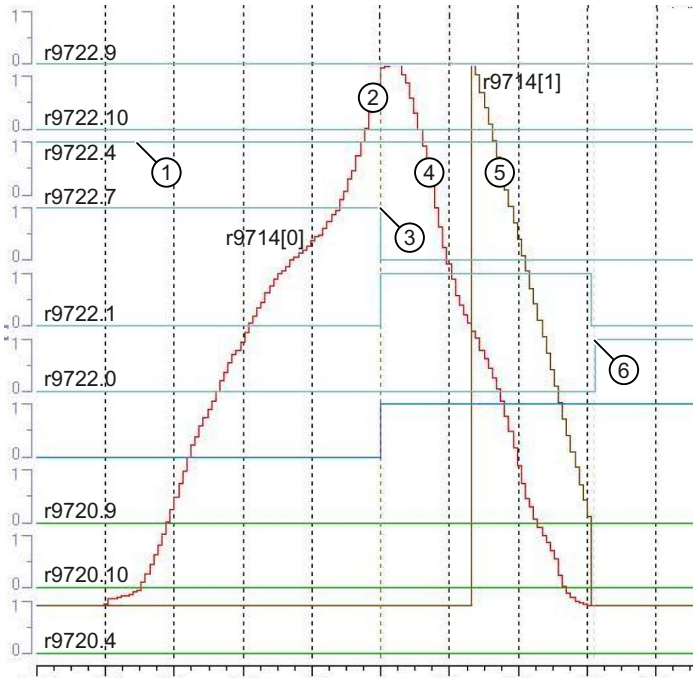


① SLS is active
② Speed: The motor accelerates to the active SLS level
③ The speed exceeds the active SLS level
④ Speed: STOP B is active - the motor brakes on the OFF3 ramp
⑤ Monitoring the speed when braking
⑥ STO as a consequence of STOP B being active

## A.2.7 SSM acceptance test

The two diagrams show the recommended steps to take during the acceptance test. It differs depending on the settings you have made for SSM :

- Diagram 1: The "speed below limit value" checkback signal remains active when the motor is switched off.
- Diagram 2: The "speed below limit value" checkback signal becomes inactive when the motor is switched off.

The diagrams show the setting "SSM without hysteresis" as an example.

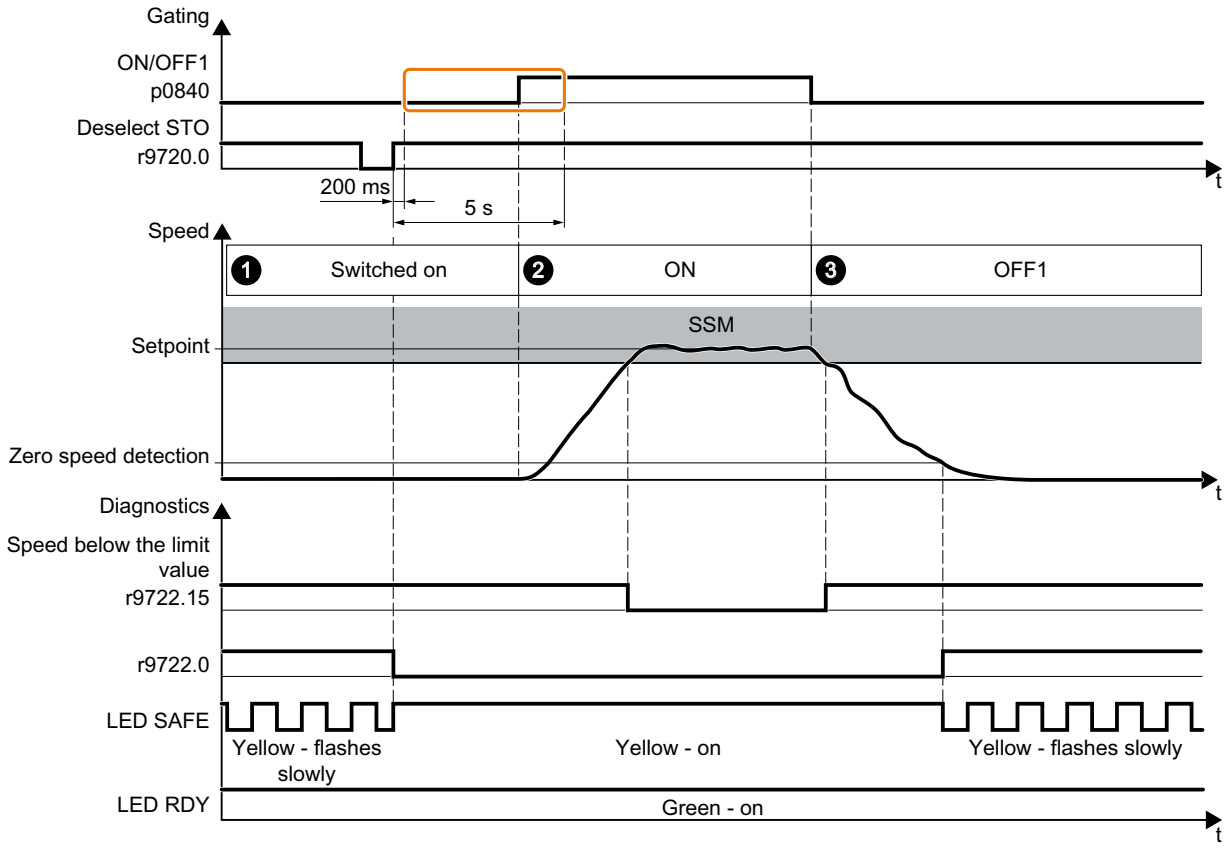


Figure A-9 Diagram 1 - acceptance test SSM with active feedback signal when the motor is switched off

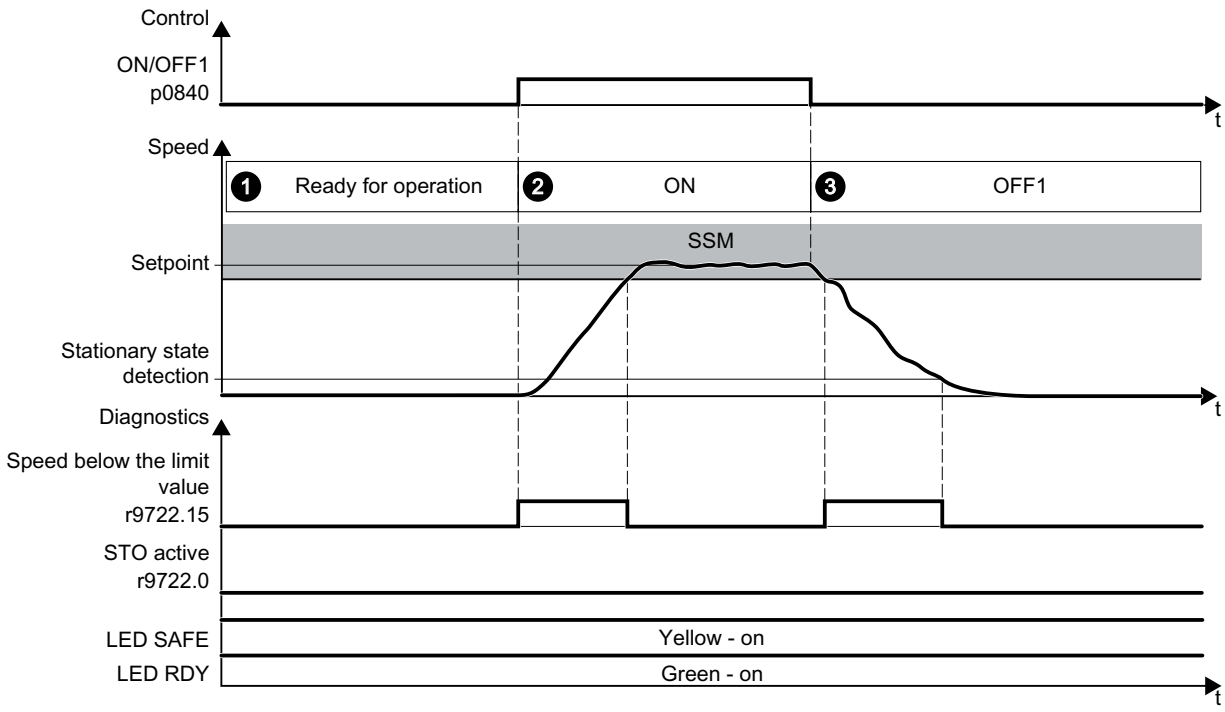


Figure A-10 Diagram 2 - acceptance test SSM with inactive feedback signal when the motor is switched off

## Procedure

| | | Status |
|---|---|---|
| 1. | **The inverter is ready** | |
| | • Check: The inverter signals neither faults nor alarms of the safety functions (r0945[0…7], r2122[0…7]). | |
| | Go online with the STARTER and configure the following trace:<br>• Trigger on variable - bit pattern (r9722.15 = 0)<br>• Record the following values: r0899, r9714[0], r9722<br>Display the following bits:<br>– r0899.11<br>– r9722.15<br>• Select the interval and pretrigger so you can recognize when the level exceeds the SSM limit and subsequently falls below it again. | |

| | | | | Status |
|---|---|---|---|---|
| 2. | **Switch on motor** | | | |
| | 2.1. | Specify a speed setpoint which is above the SSM limit. | | |
| | 2.2. | *The following procedure depends on how you have set the SSM function during commissioning:* | | |
| | | *Diagram 1:*<br>*The "speed below limit value" checkback signal remains active when the motor is switched off.* | *Diagram 2:*<br>*The "speed below limit value" checkback signal becomes inactive when the motor is switched off.* | |
| | | 2.2.1 Select STO. | Switch on the motor (ON command). | |
| | | 2.2.2 Deselect STO again. | | |
| | | 2.2.3 Switch on motor within 5 s of deselecting STO (ON command). | | |
| | 2.3. | Check that the correct motor is running. | | |
| | 2.4. | Wait until the motor speed reaches the setpoint. | | |
| 3. | **Switch off the motor** | | | |
| | 3.1. | Switch off the motor (OFF1 command). | | |
| | 3.2. | Analyze the trace: | | |
| | | • If r9714[0] > velocity limit p9346, r9722.15 = 0 applies. | | |
| | | *SSM without hysteresis:*<br>• If r9714[0] < velocity limit p9546, r9722.15 = 1 applies. | *SSM with hysteresis:*<br>• If r9714[0] < velocity limit p9546 - hysteresis p9547, r9722.15 = 1 applies. | |
| | | *The "speed below limit value" checkback signal remains active when the motor is switched off:*<br>• If the motor is switched off (r0899.11 = 0), then r9722.15 = 1 applies. | *The "speed below limit value" checkback signal becomes inactive when the motor is switched off:*<br>• If the motor is switched off (r0899.11 = 0), then r9722.15 = 0 applies. | |

You have completed the acceptance test of the SSM function.
❒

## Example of a trace

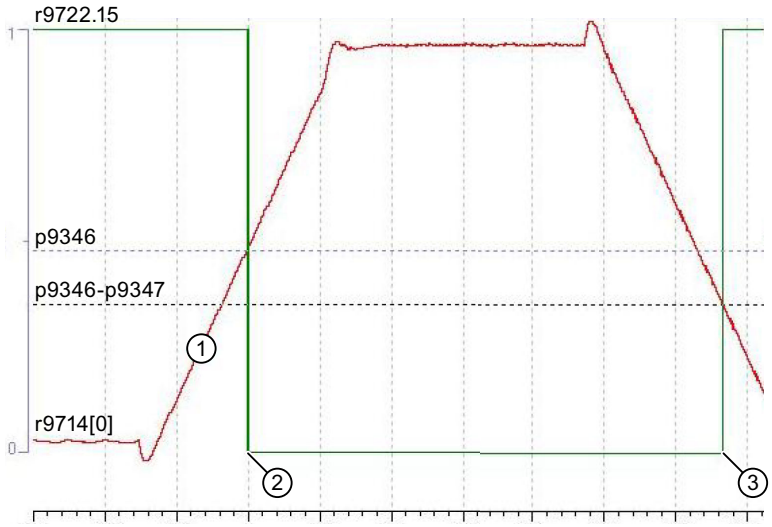


① Speed: The motor accelerates

② Speed above the limit value

③ Speed below the limit value

### A.2.8 Acceptance test SDI

The acceptance test for SDI+ and SDI- is separately described in the following. If you use the SDI function in both directions of rotation, you must carry out both acceptance tests.

SDI can be set with the STOP A and STOP B stop responses. The following diagrams only show the case with the stop response STOP A. The different response of the drive, depending on the stop response set is described in the following tables.

## Acceptance test for SDI positive

The two diagrams show the recommended steps to take during the acceptance test. It differs depending on the settings you have made for SDI:

- Diagram 1: The "SDI active" feedback signal remains active when the motor is switched off.
- Diagram 2: The "SDI active" feedback signal becomes inactive when the motor is switched off.

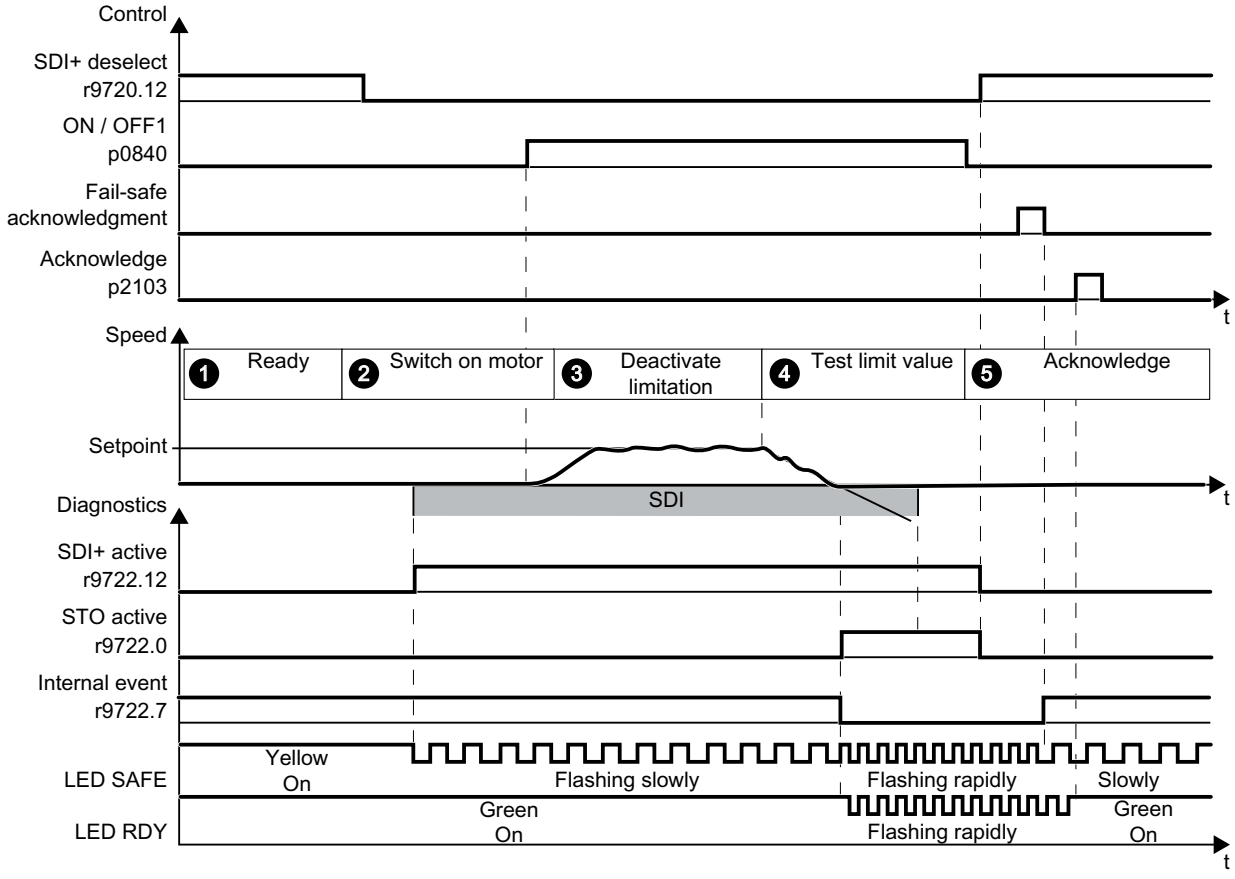


Figure A-11 Diagram 1 - acceptance for SDI+, "SDI active" remains active when the motor is switched off

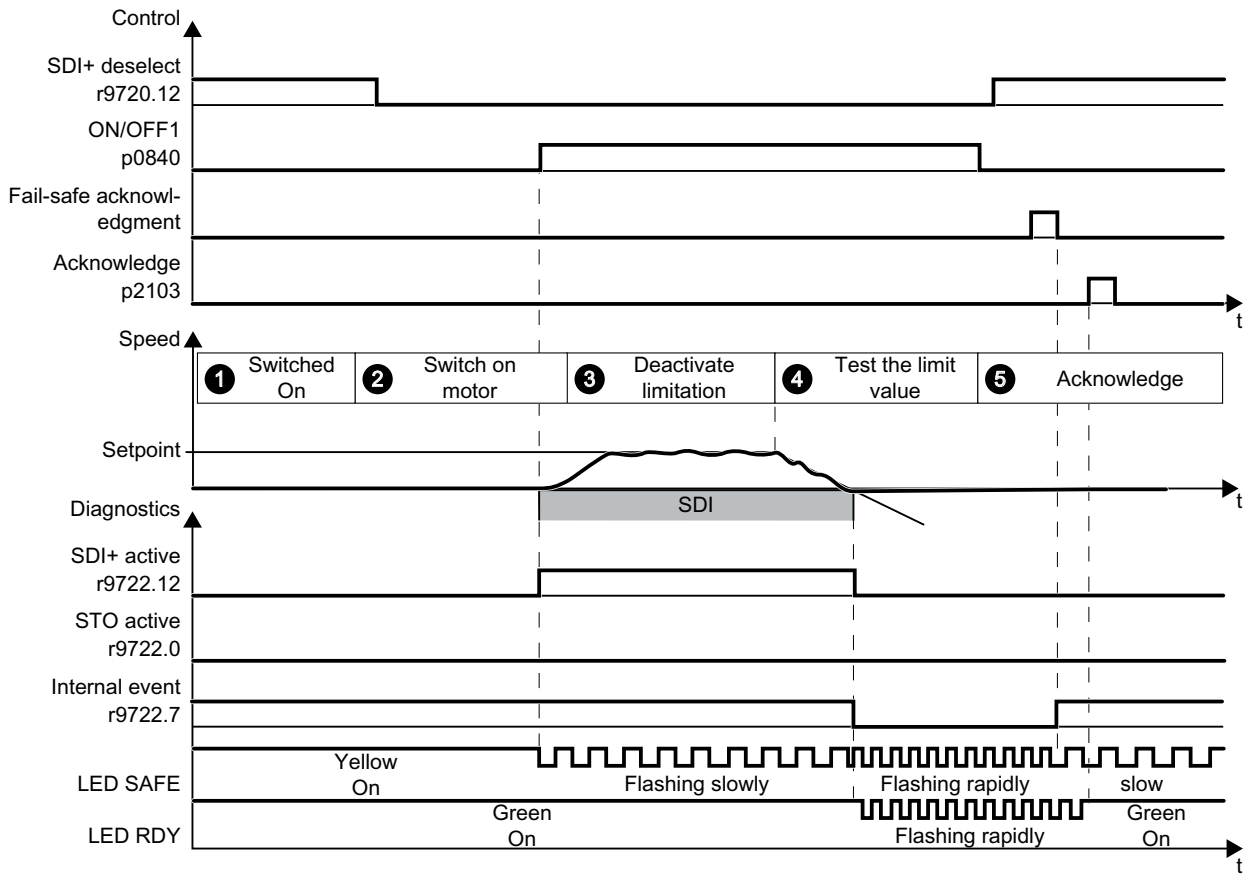


Figure A-12 Diagram 2 - acceptance for SDI+, "SDI active" becomes inactive when the motor is switched off

## Procedure

| | | Status |
|---|---|---|
| 1. | **The inverter is ready** | |
| | Check the following: | |
| | • The inverter signals neither faults nor alarms of the safety functions (r0945[0…7], r2122[0…7]). | |
| | • SDI+ is not active (r9722.12 = 0). | |
| | Go online with the STARTER and configure the following trace:<br>• Trigger on variable - bit pattern (r9722.7 = 0).<br>• Record the following values: r9713[0], r9722<br>Display the bits r9722.0/.1/.7/.12<br>• Select the interval and pretrigger so you can recognize when the SDI tolerance has been exceeded and the subsequent drive responses. | |

| | | | Status |
|---|---|---|---|
| 2. | **Switch on motor** | | |
| | 2.1. | Enter a positive speed setpoint. | |
| | 2.2. | Select SDI+ so that only positive speeds are permitted. | |
| | 2.3. | *The next steps depend on how you have set the SDI function during commissioning:* | |
| | | *Diagram 1:*<br>*The "SDI active" feedback signal remains active when the motor is switched off.* | *Diagram 2:*<br>*The "SDI active" feedback signal becomes inactive when the motor is switched off.* |
| | | Switch on motor within 5 seconds after deselecting SDI (ON command).<br>*If you wait longer than 5 seconds for the ON command, then STO is activated. In this case, deselect SDI and then select it again.* | Switch on the motor (ON command). |
| | 2.4. | Check that the correct motor is rotating in the expected direction. | |
| 3. | **Deactivate the setpoint limitation for the acceptance test** | | |
| | Activate the acceptance mode:<br> 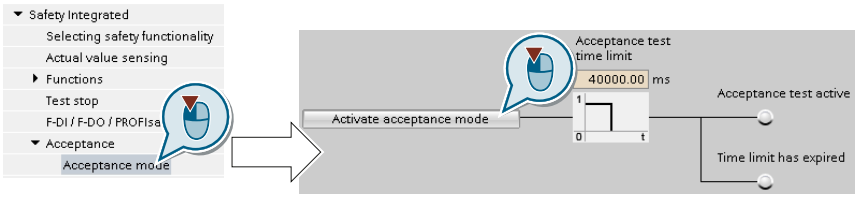 <br> | | |

| | | | | Status |
|---|---|---|---|---|
| 4. | **Test the set limit value** | | | |
| | 4.1. | Enter a negative speed setpoint. | | |
| | 4.2. | *The following test depends on how you have set the SDI function during commissioning:* | | |
| | | *STOP A in the event of a limit value violation*<br>• The inverter signals the following:<br>– C01716 and C30716 (tolerance for safe direction of motion exceeded)<br>– C01700 and C30700 (STOP A initiated) | *STOP B in the event of a limit value violation*<br>• The inverter signals the following:<br>– C01716 and C30716 (tolerance for safe direction of motion exceeded)<br>– C01701 and C30701 (STOP B initiated)<br>– C01700 and C30700 (STOP A initiated) | |
| | 4.3. | Analyze the trace: | | |
| | | • When SDI+ is selected, the inverter signals: SDI+ is active (r9722.12 = 1). | | |
| | | • If r9713[0] > SDI tolerance, then the inverter signals an internal event (r9722.7 = 0). | | |
| | | *STOP A in the event of a limit value violation* | *STOP B in the event of a limit value violation* | |
| | | • The motor coasts down to a standstill (r9722.0 = 1). | • The inverter brakes the motor on the OFF3 ramp (r9722.1 = 1). | |
| | | | • After braking, STO is active (r9722.0 = 1). | |
| 5. | **Acknowledge fault** | | | |
| | 5.1. | Deselect SDI+. | | |
| | 5.2. | Check: SDI+ is not active (r9722.12 = 0). | | |
| | 5.3. | Acknowledge the messages for the safety functions. | | |

You have completed the acceptance test of the SDI function for the positive direction of rotation.
❐

## Acceptance test for SDI negative

The two diagrams show the recommended steps to take during the acceptance test. It differs depending on the settings you have made for SDI :

- Diagram 1: The "SDI active" feedback signal remains active when the motor is switched off.
- Diagram 2: The "SDI active" feedback signal becomes inactive when the motor is switched off.

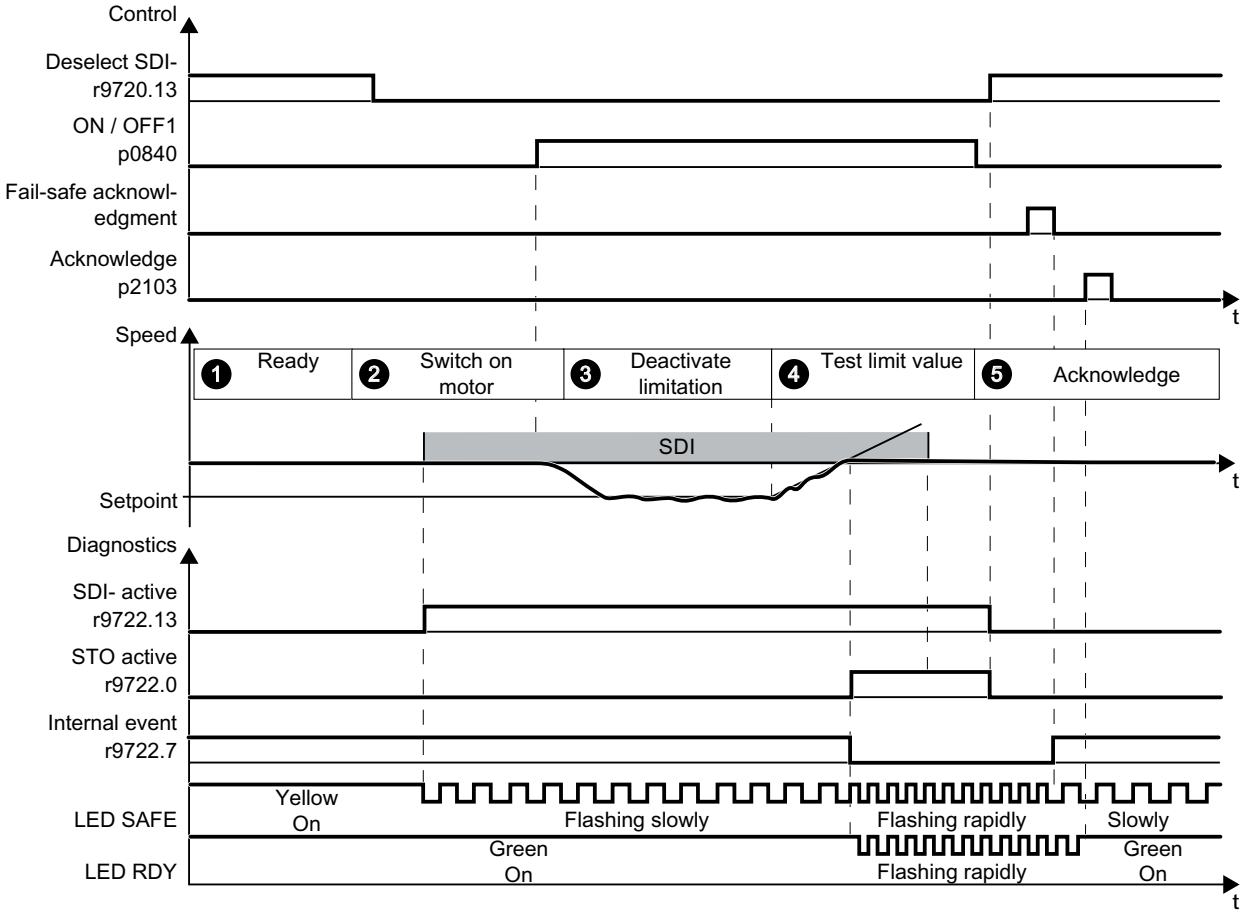


Figure A-13 Diagram 1 - acceptance for SDI-, "SDI active" remains active when the motor is switched off

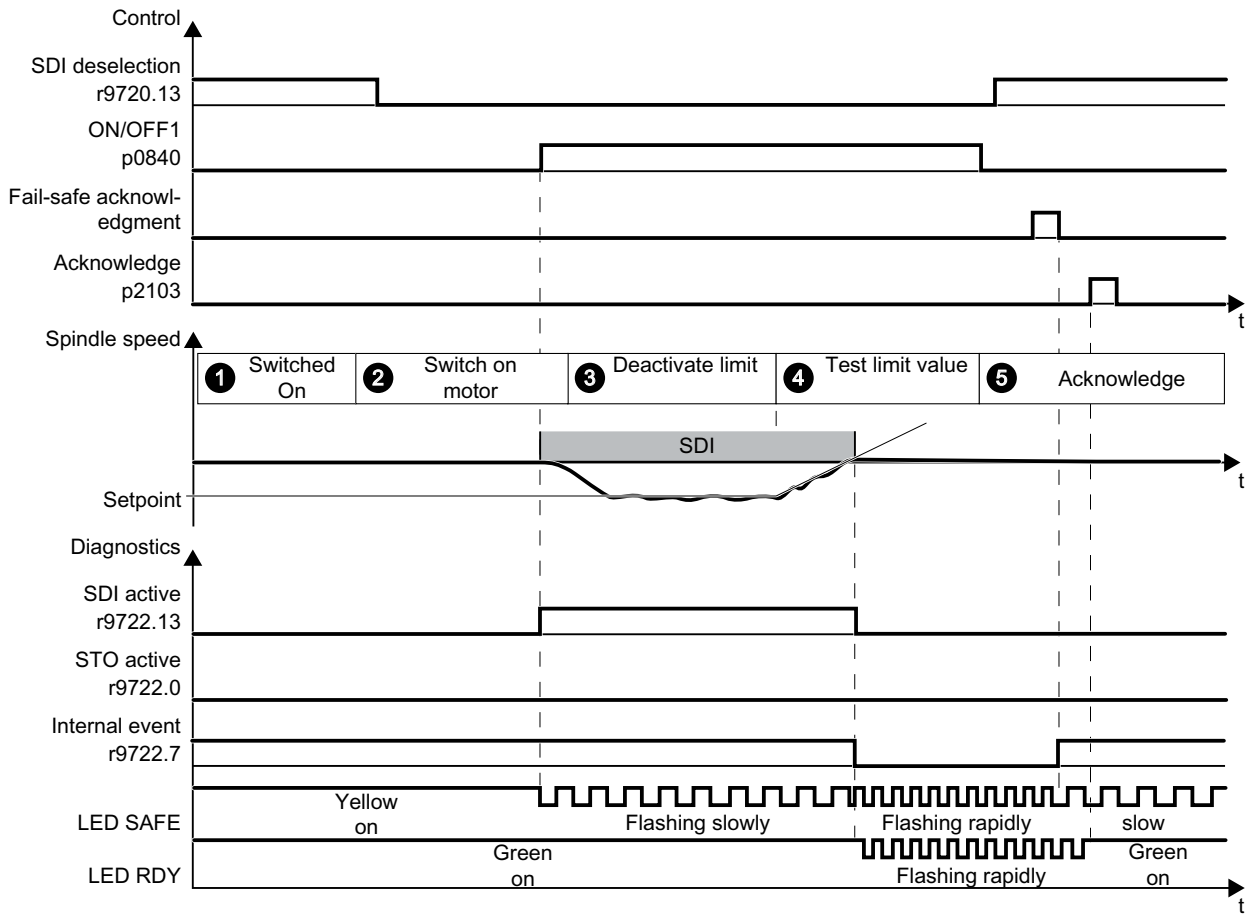


Figure A-14 Diagram 2 - acceptance for SDI-, "SDI active" becomes inactive when the motor is switched off

### Procedure

| | | Status |
|---|---|---|
| 1. | **The inverter is ready** | |
| | Check the following: | |
| | • SDI- is not active (r9722.13 = 0). | |
| | • The inverter signals neither faults nor alarms of the safety functions (r0945[0…7], r2122[0…7]). | |
| | Go online with the STARTER and configure the following trace:<br>• Trigger on variable - bit pattern (r9722.7 = 0).<br>• Record the following values: r9713[0], r9722<br>Display the bits r9722.0/.1/.7/.13<br>• Select the interval and pretrigger so you can recognize when the SDI tolerance has been exceeded and the subsequent drive responses. | |

| | | | | Status |
|---|---|---|---|---|
| 2. | **Switch on motor** | | | |
| | 2.1. | Enter a negative speed setpoint. | | |
| | 2.2. | Select SDI- so that only negative speeds are permitted. | | |
| | 2.3. | *The next steps depend on what settings you made for SDI during commissioning:* | | |
| | | *Diagram 1:*<br>*The "SDI active" feedback signal remains active when the motor is switched off.* | *Diagram 2:*<br>*The "SDI active" feedback signal becomes inactive when the motor is switched off.* | |
| | | Switch on motor within 5 seconds after deselecting SDI (ON command).<br>*If you wait longer than 5 seconds for the ON command, then STO is activated. In this case, deselect SDI and then select it again.* | Switch on the motor (ON command). | |
| | 2.4. | Check that the correct motor is rotating in the expected direction. | | |
| 3. | **Deactivate the setpoint limitation for the acceptance test** | | | |
| | Activate the Acceptance mode in Startdrive:<br> <br> | | | |
| 4. | **Test the set limit value** | | | |
| | 4.1. | Enter a positive speed setpoint. | | |
| | 4.2. | *The following test depends on how you have set the SDI function during commissioning:* | | |
| | | *STOP A in the event of a limit value violation* | *STOP B in the event of a limit value violation* | |
| | | The inverter signals the following:<br>• C01716 and C30716 (tolerance for safe direction of motion exceeded)<br>• C01700 and C30700 (STOP A initiated) | The inverter signals the following:<br>• C01716 and C30716 (tolerance for safe direction of motion exceeded)<br>• C01701 and C30701 (STOP B initiated)<br>• C01700 and C30700 (STOP A initiated) | |
| | 4.3. | Analyze the trace | | |
| | | • When SDI- is activated, the inverter signals: SDI- is active (r9722.13 = 1). | | |
| | | • If r9713[0] > SDI tolerance, then the inverter signals an internal event (r9722.7 = 0). | | |
| | | *STOP A in the event of a limit value violation* | *STOP B in the event of a limit value violation* | |
| | | • The motor coasts down to a standstill (r9722.0 = 1). | • The inverter brakes the motor on the OFF3 ramp (r9722.1 = 1). | |
| | | | • After braking, STO is active (r9722.0 = 1). | |

| | | | Status |
|---|---|---|---|
| 5. | **Acknowledge fault** | | |
| | 5.1. | Deselect SDI-. | |
| | 5.2. | Check: SDI- is not active (r9722.13 = 0). | |
| | 5.3. | Acknowledge the messages for the safety functions. | |

You have completed the acceptance test of the SDI function for the negative direction of rotation.
❐

## Example of a trace (STOP B in the event of a limit violation)

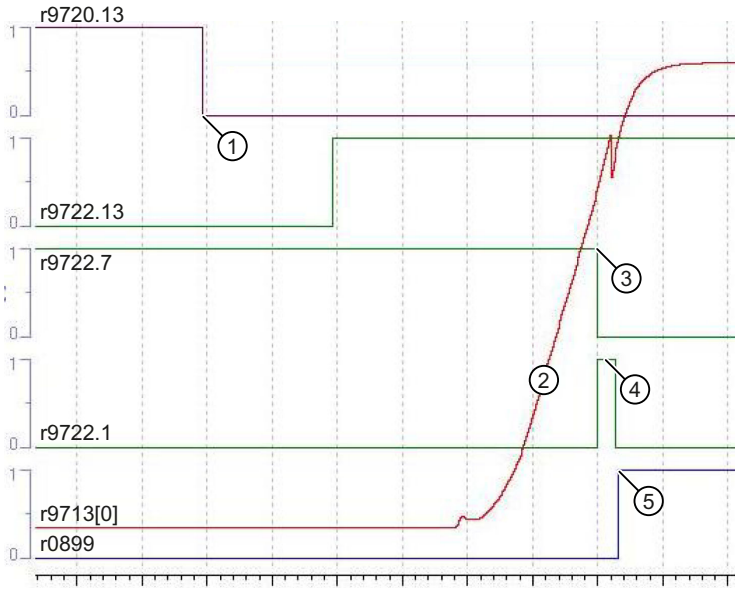


① SDI is selected
② Position actual value: The motor starts to rotate
③ The position actual value of the drive deviates from the permissible tolerance
④ STOP B is active - the motor brakes on the OFF3 ramp
⑤ STO as a consequence of STOP B being active

## A.2.9 Acceptance test for F-DI status in PROFIsafe telegram 900

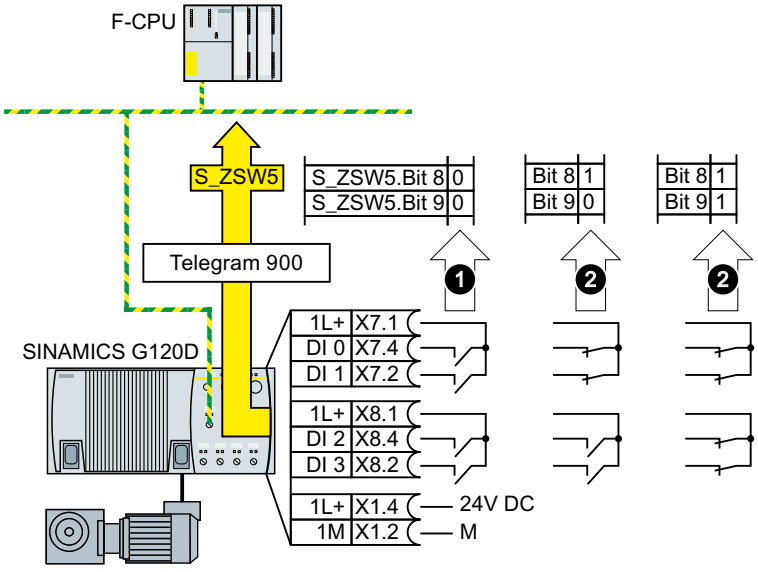


Figure A-15 Acceptance test for the status of the fail-safe inputs using the example of a SINAMICS G120D

### Procedure

| | | | Status |
|---|---|---|---|
| - | **The inverter is ready** | | |
| | • The inverter signals neither faults nor alarms of the safety functions (r0945[0…7], r2122[0…7]). | | |
| 1. | **Check the "Low" status of the fail-safe input** | | |
| | 1.1. | Switch the signal of the fail-safe digital input to be tested to "low". | |
| | 1.2. | In the F-CPU, check whether in status word S_ZSW5 the corresponding bit has the value 0. | |
| 2. | **Check the "High" status of the fail-safe input** | | |
| | 2.1. | Switch the signal of the fail-safe digital input to be tested to "high". | |
| | 2.2. | In the F-CPU, check whether in status word S_ZSW5 the corresponding bit has the value 1. | |

You have completed the acceptance test for the F-DI status.
❐

# A.3 Example of the machine documentation of an acceptance test

## Machine or system description

| | |
|---|---|
| Designation | … |
| Type | … |
| Serial number | … |
| Manufacturer | … |
| End user | … |
| Block diagram of the machine and/or plant:<br>…<br>…<br>…<br>…<br>…<br>…<br>… | |

## Inverter data

Table A-1 Hardware version of the safety-related inverter

| Labeling the drive | Article number and hardware version of the inverter |
|---|---|
| … | … |
| … | … |

## Function table

Table A-2 Active safety functions depending on the operating mode and safety equipment

| Operating mode | Safety equipment | Drive | Selected safety function | Checked |
|---|---|---|---|---|
| … | … | … | … | |
| … | … | … | … | |
| *Example:* | | | | |
| *Production* | *Protective door closed* | *Conveyor belt* | --- | --- |
| | *Protective door open* | *Conveyor belt* | *SS1 (braking in 2 seconds)* | |
| | *Emergency Stop button pressed* | *Conveyor belt* | *STO* | |
| *Setting up* | *Protective door closed* | *Conveyor belt* | --- | --- |
| | *Protective door open* | *Conveyor belt* | *SLS level 1 (300 rpm)* | |
| | *Emergency Stop button pressed* | *Conveyor belt* | *STO* | |

## Logging the settings

| File name of the log: | |
|---|---|
| … | |
| … | |

## Data backup

| Data | Storage medium | | | Holding area |
|---|---|---|---|---|
| | Archiving type | Designation | Date | |
| Log of the settings | … | … | … | … |
| Acceptance tests | … | … | … | … |
| Traces | … | … | … | … |
| PLC program | … | … | … | … |
| Circuit diagrams | … | … | … | … |

## Countersignatures

### Commissioning engineer

This confirms that the tests and checks have been carried out properly.

| Date | Name | Company/dept. | Signature |
|---|---|---|---|
| … | … | … | … |

### Machine manufacturer

This confirms that the settings documented above are correct.

| Date | Name | Company/dept. | Signature |
|---|---|---|---|
| … | … | … | … |

# A.4 Standards and specifications

## A.4.1 General information

### A.4.1.1 Aims

Manufacturers and operating companies of equipment, machines, and products are responsible for ensuring the required level of safety. This means that plants, machines, and other equipment must be designed to be as safe as possible in accordance with the current state of the art. For this purpose, companies describe in the various standards the current state of the art covering all aspects relevant to safety. If it can be justifiably assumed that all of the relevant standards are complied with, this ensures that state-of-the-art technology has been utilized and, in turn, a plant builder or a manufacturer of a machine or a piece of equipment has fulfilled his appropriate responsibility.

Safety systems are designed to minimize potential hazards for both people and the environment by means of suitable technical equipment, without restricting industrial production and the use of machines more than is necessary. The protection of man and environment must be assigned equal importance in all countries based on internationally harmonized rules and regulations. This is also intended to avoid competitive advantages or disadvantages due to different safety requirements in different countries.

There are different concepts and requirements in the various regions and countries of the world when it comes to ensuring the appropriate degree of safety. The legislation and the requirements of how and when proof is to be given and whether there is an adequate level of safety are just as different as the assignment of responsibilities.

The most important thing for manufacturers of machines and companies that set up plants and systems is that the legislation and regulations in the country where the machine or plant is being operated apply. For example, the control system for a machine that is to be used in the US must fulfill local US requirements even if the machine manufacturer (OEM) is based in the European Economic Area (EEA).

### A.4.1.2 Functional safety

Safety, from the perspective of the object to be protected, cannot be split-up. The causes of hazards and, in turn, the technical measures to avoid them can vary significantly. This is why a differentiation is made between different types of safety (e.g. by specifying the cause of possible hazards). "Functional safety" is involved if safety depends on the correct function.

To ensure the functional safety of a machine or plant, the safety-related parts of the protection and control devices must function correctly. In addition, the systems must behave in such a way that either the plant remains in a safe state or it is brought into a safe state if a fault occurs. In this case, it is necessary to use specially qualified technology that fulfills the requirements described in the associated Standards. The requirements to implement functional safety are based on the following basic goals:

- Avoiding systematic faults
- Controlling random faults or failures

Benchmarks for establishing whether or not a sufficient level of functional safety has been achieved include the probability of hazardous failures, the fault tolerance, and the quality that is to be ensured by avoiding systematic faults. This is expressed in the standards using specific classification. In IEC/EN 61508, IEC/EN 62061 "Safety Integrity Level" (SIL) and EN ISO 13849-1 "Category" and "Performance Level" (PL).

## A.4.2 Safety of machinery in Europe

The EU Directives that apply to the implementation of products are based on Article 95 of the EU contract, which regulates the free exchange of goods. These are based on a new global concept ("new approach", "global approach"):

- EU Directives only specify general safety goals and define basic safety requirements.
- Technical details can be defined by means of standards by Standards Associations that have the appropriate mandate from the commission of the European Parliament and Council (CEN, CENELEC). These standards are harmonized in line with a specific directive and listed in the official journal of the commission of the European Parliament and Council. Legislation does not specify that certain standards have to be observed. When the harmonized Standards are observed, it can be assumed that the safety requirements and specifications of the Directives involved have been fulfilled.
- EU Directives specify that the Member States must mutually recognize domestic regulations.

The EU Directives are equal. This means that if several Directives apply for a specific piece of equipment or device, the requirements of all of the relevant Directives apply (e.g. for a machine with electrical equipment, the Machinery Directive and the Low-Voltage Directive apply).

### A.4.2.1 Machinery Directive

The basic safety and health requirements specified in Annex I of the Directive must be fulfilled for the safety of machines.

The protective goals must be implemented responsibly to ensure compliance with the Directive.

Manufacturers of a machine must verify that their machine complies with the basic requirements. This verification is facilitated by means of harmonized standards.

IEC 61800-5-2 Adjustable-speed electrical power drive systems Part 5-2 is relevant for the Machinery Directive: Safety requirements - Functional safety

Within the context of IEC 61508, IEC 61800-5-2 considers adjustable speed electric power drive systems (PDS), which are suitable for use in safety-related applications (PDS(SR)).

IEC 61800-5-2 places demands on PDS(SR) as subsystems of a safety-related system. This therefore permits the implementation of the electrical/electronic/programmable electronic elements of a PDS(SR) taking into account the safety-relevant performance of the safety function(s) of a PDS.

Manufacturers and suppliers of PDS(SR) can prove to users (e.g. integrators of control systems, developers of machines and plants etc.) the safety-relevant performance of their equipment by implementing the specifications stipulated in standard IEC 61800-5-2.

### A.4.2.2 Harmonized European Standards

The two Standards Organizations CEN (Comité Européen de Normalisation) and CENELEC (Comité Européen de Normalisation Électrotechnique), mandated by the EU Commission, drew-up harmonized European standards in order to precisely specify the requirements of the EC directives for a specific product. These standards (EN standards) are published in the official journal of the commission of the European Parliament and Council and must be included without revision in domestic standards. They are designed to fulfill basic health and safety requirements as well as the protective goals specified in Annex I of the Machinery Directive.

When the harmonized standards are observed, it is "automatically assumed" that the Directive is fulfilled. As such, manufacturers can assume that they have observed the safety aspects of the Directive under the assumption that these are also covered in this standard. However, not every European Standard is harmonized in this sense. Key here is the listing in the official journal of the commission of the European Parliament and Council.

The European Safety of Machines standard is hierarchically structured. It is divided into:

- A standards (basic standards)
- B standards (group standards)
- C standards (product standards)

#### Type A standards/basic standards

A standards include basic terminology and definitions relating to all types of machine. This includes EN ISO 12100 (previously EN 292-1) "Safety of Machines, Basic Terminology, General Design Principles".

A standards are aimed primarily at the bodies responsible for setting the B and C standards. The measures specified here for minimizing risk, however, may also be useful for manufacturers if no applicable C standards have been defined.

#### Type B standards/group standards

B standards cover all safety-related standards for various different machine types. B standards are aimed primarily at the bodies responsible for setting C standards. They can also be useful for manufacturers during the machine design and construction phases, however, if no applicable C standards have been defined.

A further sub-division has been made for B standards:

- Type B1 standards for higher-level safety aspects (e.g. ergonomic principles, safety clearances from sources of danger, minimum clearances to prevent parts of the body from being crushed).
- Type B2 standards for protective safety devices are defined for different machine types (e.g. EMERGENCY STOP devices, two-hand operating circuits, interlocking elements, contactless protective devices, safety-related parts of controls).

#### Type C standards/product standards

C standards are product-specific standards (e.g. for machine tools, woodworking machines, elevators, packaging machines, printing machines etc.). Product standards cover machine-specific requirements. The requirements can, under certain circumstances, deviate from the basic and group standards. Type C/product standards have the highest priority for machine manufacturers who can assume that it fulfills the basic requirements of Annex I of the Machinery Directive (automatic presumption of compliance). If no product standard has been

defined for a particular machine, type B standards can be applied when the machine is constructed.

A complete list of the standards specified and the mandated draft standards are available on the Internet at the following address:

Standards (http://www.newapproach.org/)

Recommendation: Due to the rapid pace of technical development and the associated changes in machine concepts, the standards (and C standards in particular) should be checked to ensure that they are up to date. Please note that the application of a particular standard may not be mandatory provided that all the safety requirements of the applicable EU directives are fulfilled.

### A.4.2.3 Standards for implementing safety-related controllers

If the functional safety of a machine depends on various control functions, the controller must be implemented in such a way that the probability of safety functions failing in a dangerous fashion is sufficiently minimized. The EN ISO 13849-1 and IEC61508 standards define principles for implementing safety-related machine controllers which, when properly applied, ensure that all the safety requirements of the EC Machinery Directive are fulfilled. These standards ensure that the relevant safety requirements of the Machinery Directive are fulfilled.

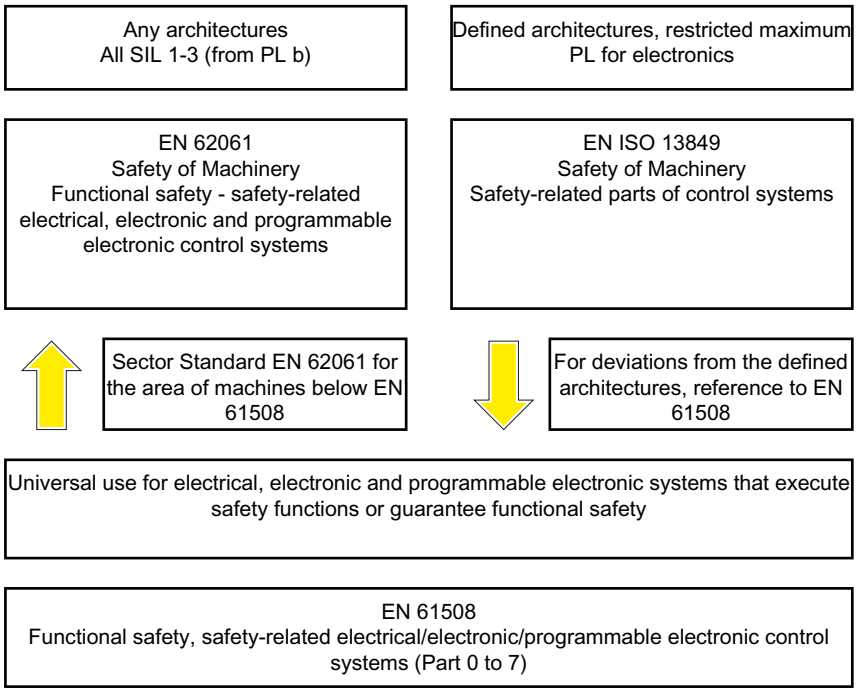


Figure A-16 Standards for implementing safety-related controllers

The application areas of EN ISO 13849-1, EN 62061, and EN 61508 are very similar. To help users make an appropriate decision, the IEC and ISO associations have specified the application areas of both standards in a joint table in the introduction to the standards.
EN ISO 13849-1 or EN 62061 should be applied depending on the technology (mechanics, hydraulics, pneumatics, electrics, electronics, programmable electronics), risk classification and architecture.

Further, Standard IEC 61800-5-2 is applicable for variable-speed electric drives with integrated safety functions. IEC 61800-5-2 defines requirements and gives recommendations for designing and developing, integrating and validating safety-related applications regarding their functional safety. IEC 61800-5-2 is applicable for adjustable speed electric power drive systems, which are handled in other parts of IEC 61800 standards.

| | Systems for executing safety-related control functions | EN ISO 13849-1 | EN 62061 |
|---|---|---|---|
| A | Non-electrical (e.g. hydraulic, pneumatic) | X | Not covered |
| B | Electromechanical (e.g. relay and/or basic electronics) | Restricted to the designated architectures (see comment 1) and max. up to PL = e | All architectures and max. up to SIL 3 |
| C | Complex electronics (e.g. programmable electronics) | Restricted to the designated architectures (see comment 1) and max. up to PL = d | All architectures and max. up to SIL 3 |
| D | A standards combined with B standards | Restricted to the designated architectures (see comment 1) and max. up to PL = e | X<br>See comment 3 |
| E | C standards combined with B standards | Restricted to the designated architectures (see comment 1) and max. up to PL = d | All architectures and max. up to SIL 3 |
| F | C standards combined with A standards<br>or<br>C standards combined with A standards and B standards | X<br><br>See comment 2 | X<br><br>See comment 3 |

"X" indicates that the point is covered by this standard.

Comment 1:
Designated architectures are described in Annex B of EN ISO 13849-1 and provide a simplified basis for the quantification.

Comment 2:
For complex electronics: Using designated architectures in compliance with EN ISO 13849-1 up to PL = d or every architecture in compliance with EN 62061.

Comment 3:
For non-electrical systems: Use components that comply with EN ISO 13849-1 as sub-systems.

### A.4.2.4 DIN EN ISO 13849-1

A qualitative analysis according to DIN EN 13849-1 is not sufficient for modern control systems due to their technology. Among other things, DIN EN ISO 13849-1 does not take into account time behavior (e.g. test interval and/or cyclic test, lifetime). This results in the probabilistic approach in DIN EN ISO 13849-1 (probability of failure per unit time).

DIN EN ISO 13849-1 considers complete safety functions and all the devices required to execute these. With DIN EN ISO 13849-1, safety functions are considered from both a qualitative as well as a quantitative perspective. Performance levels (PL), which are based on specific categories, are used. The following safety-related characteristic quantities are required for devices/equipment:

- Category (structural requirement)
- PL: Performance level
- $MTTF_d$: Mean time to dangerous failure

- DC: Diagnostic coverage
- CCF:
  Common cause failure

The standard describes how the performance level (PL) is calculated for safety-related components of the controller on the basis of designated architectures. For deviations from this, DIN EN ISO 13849-1 refers to IEC 61508.

When combining several safety-related parts to form a complete system, the standard explains how to determine the resulting PL.

**Note**

**DIN EN ISO 13849-1 and machinery directive**

Since May 2007, DIN EN ISO 13849-1 has been harmonized as part of the Machinery Directive.

### A.4.2.5 EN 62061

EN 62061 (this is identical to IEC 62061) is a sector-specific standard below IEC/EN 61508. It describes the implementation of safety-related electrical control systems of machines and takes into account the complete lifecycle - from the conceptual phase to de-commissioning. The standard is based on the quantitative and qualitative analyses of safety functions,

whereby it systematically applies a top-down approach to implementing complex control systems (known as "functional decomposition"). The safety functions derived from the risk analysis are sub-divided into sub-safety functions, which are then assigned to real devices, sub-systems, and sub-system elements. Both the hardware and software are covered. EN 62061 also describes the requirements placed on implementing application programs.

A safety-related control systems comprises different sub-systems. From a safety perspective, the sub-systems are described in terms of the SIL claim limit and $PFH_D$ characteristic quantities.

Programmable electronic devices (e.g. PLCs or variable-speed drives) must fulfill IEC 61508. They can then be integrated in the controller as sub-systems. The following safety-related characteristic quantities must be specified by the manufacturers of these devices.

Safety-related characteristic quantities for subsystems:

- SIL CL: SIL claim limit
- $PFH_D$:
  Probability of dangerous failures per hour
- T1:
  Lifetime

Simple sub-systems (e.g. sensors and actuators) in electromechanical components can, in turn, comprise sub-system elements (devices) interconnected in different ways with the characteristic quantities required for determining the relevant $PFH_D$ value of the sub-system.

Safety-related characteristic quantities for subsystem elements (devices):

- λ:
  Failure rate
- B10 value: For elements that are subject to wear
- T1:
  Lifetime

For electromechanical devices, a manufacturer specifies a failure rate λ with reference to the number of operating cycles. The failure rate per unit time and the lifetime must be determined using the switching frequency for the particular application.

Parameters for the sub-system, which comprises sub-system elements, that must be defined during the design phase:

- T2:
  Diagnostic test interval
- β:
  Susceptibility to common cause failure
- DC:
  Diagnostic coverage

The $PFH_D$ value of the safety-related controller is determined by adding the individual $PFH_D$ values for subsystems.

The user has the following options when setting up a safety-related controller:

- Use devices and sub-systems that already comply with EN ISO 13849-1, IEC/EN 61508, or IEC/EN 62061. The standard provides information specifying how qualified devices can be integrated when safety functions are implemented.
- Develop own subsystems:
  - Programmable, electronic systems and complex systems: Application of IEC 61508 or IEC 61800-5-2.
  - Simple devices and subsystems: Application of EN 62061.

EN 62061 does not include information about non-electric systems. The standard provides detailed information on implementing safety-related electrical, electronic, and programmable electronic control systems. DIN EN ISO 13849-1 must be applied for non-electric systems.

---

**Note**

**Function examples**

Details of simple sub-systems that have been implemented and integrated are now available as "functional examples".

---

**Note**

**EN 62061 and machinery directive**

IEC 62061 has been ratified as EN 62061 in Europe and harmonized as part of the Machinery Directive.

---

### A.4.2.6 Series of standards IEC 61508 (VDE 0803)

This series of standards describes the current state of the art.

IEC 61508 is not harmonized in line with any EU directives, which means that an automatic presumption of conformity for fulfilling the protective requirements of a directive is not implied. The manufacturer of a safety-related product, however, can also use IEC 61508 to fulfill basic requirements of European directives in accordance with the latest conceptual design, for example, in the following cases:

- If no harmonized standard exists for the application in question. In this particular case, the manufacturer may use IEC 61508. although no presumption of conformity exists here.
- A harmonized European standard (e.g. EN 62061, EN ISO 13849, EN 60204-1) references IEC 61508. This ensures that the appropriate requirements of the directives are fulfilled ("standard that is also applicable"). When manufacturers apply IEC 61508 properly and responsibly in accordance with this reference, they can use the presumption of conformity of the referencing standard.

IEC 61508 covers all the aspects that must be taken into account when E/E/PES systems (**e**lectrical, **e**lectronic, and **p**rogrammable **e**lectronic **s**ystem) are used in order to execute safety functions and/or to ensure the appropriate level of functional safety. Other hazards (e.g. electric shock) are not part of the standard, similar to DIN ISO 13849.

IEC 61508 has recently been declared the "International Basic Safety Publication", which makes it a framework for other sector-specific standards (e.g. EN 62061). As a result, this standard is now accepted worldwide, particularly in North America and in the automotive industry. Today, many regulatory bodies already stipulate it (e.g. as a basis for NRTL listing).

Another recent development with respect to IEC 61508 is its system approach, which extends the technical requirements to include the entire safety installation from the sensor to the actuator, the quantification of the probability of hazardous failure due to random hardware failures, and the creation of documentation covering all phases of the safety-related lifecycle of the E/E/PES.

### A.4.2.7 Risk analysis/assessment

Risks are intrinsic in machines due to their design and functionality. For this reason, the Machinery Directive requires that a risk assessment be performed for each machine and, if necessary, the level of risk reduced until the residual risk is less than the tolerable risk. To assess these risks, the following standards must be applied:

- EN ISO 12100 "Safety of Machinery - General Design Principles - Risk Assessment and Minimizing Risks"
- EN ISO 13849-1 "Safety-related parts of control systems"

EN ISO 12100 focuses on the risks to be analyzed and the design principles for minimizing risk.

The risk assessment is a procedure that allows hazards resulting from machines to be systematically investigated. Where necessary, the risk assessment is followed by a risk reduction procedure. When the procedure is repeated, this is known as an iterative process. This can help eliminate hazards (as far as this is possible) and can act as a basis for implementing suitable protective measures.

The risk assessment involves the following:

- Risk analysis
  - Determines the limits of the machine (EN ISO 12100)
  - Identification of hazards (EN ISO 12100)
  - Estimating the level of risk (EN 1050 Paragraph 7)
- Risk evaluation

As part of the iterative process to achieve the required level of safety, a risk assessment is carried out after the risk estimation. A decision must be made here as to whether the residual risk needs to be reduced. If the risk is to be further reduced, suitable protective measures must be selected and applied. The risk assessment must then be repeated.

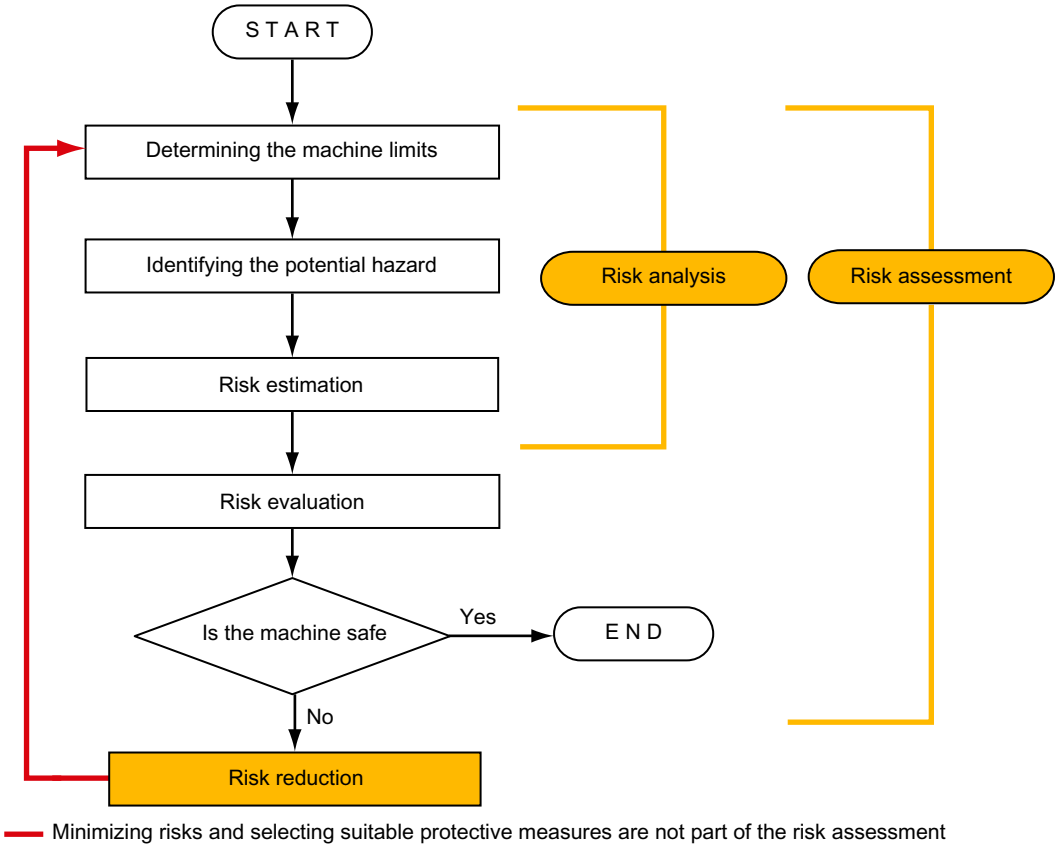


Figure A-17 Iterative process for achieving safety

Risks must be reduced by designing and implementing the machine accordingly (e.g. by means of controllers or protective measures suitable for the safety-related functions).

If the protective measures involve the use of interlocking or control functions, these must be designed according to EN ISO 13849-1. For electrical and electronic control systems, EN 62061 can be applied instead of EN ISO 13849-1. Electronic controllers and bus systems must also comply with IEC 61508.

#### A.4.2.8 Risk reduction

Risk reduction measures for a machine can be implemented by means of safety-related control functions in addition to structural measures. To implement these control functions, special requirements must be taken into account, graded according to the magnitude of the risk. These are described in EN ISO 13849-1 or, in the case of electrical controllers (particularly programmable electronics), in EN 61508 or EN 62061. The requirements regarding safety-related controller components are graded according to the magnitude of the risk and the level to which the risk needs to be reduced.

**EN ISO 13849-1** defines a risk flow chart that instead of categories results in hierarchically graduated Performance Levels (PL).

**IEC/EN 62061** uses "Safety Integrity Level" (SIL) for classification purposes. This is a quantified measure of the safety-related performance of a controller. The required SIL is also determined in accordance with the risk assessment principle according to ISO 12100 (EN 1050). Annex A of the standard describes a method for determining the required Safety Integrity Level (SIL).

Regardless of which standard is applied, steps must be taken to ensure that all the machine controller components required for executing the safety-related functions fulfill these requirements.

#### A.4.2.9 Residual risk

In today's technologically advanced world, the concept of safety is relative. The ability to ensure safety to the extent that risk is ruled out in all circumstances – "zero-risk guarantee" – is practically impossible. The residual risk is the risk that remains once all the relevant protective measures have been implemented in accordance with the latest state of the art.

Residual risks must be clearly referred to in the machine/plant documentation (user information according to EN ISO 12100).

#### A.4.2.10 EC declaration of conformity

The EC Declaration of Conformity for the product can be obtained from your local Siemens office or in the Internet at:

EC declaration of conformity (https://support.industry.siemens.com/cs/ww/en/view/67385845)

### A.4.3 Machine safety in the USA

A key difference between the USA and Europe in the legal requirements regarding safety at work is that, in the USA, no legislation exists regarding machinery safety that is applicable in all of the states and that defines the responsibility of the manufacturer/supplier. A general requirement exists stating that employers must ensure a safe workplace.

### A.4.3.1 Minimum requirements of the OSHA

The Occupational Safety and Health Act (OSHA) from 1970 regulates the requirement that employers must offer a safe place of work. The core requirements of OSHA are specified in Section 5 "Duties".

The requirements of the OSH Act are managed by the "Occupational Safety and Health Administration" (also known as OSHA). OSHA employs regional inspectors who check whether or not workplaces comply with the applicable regulations.

The OSHA regulations are described in OSHA 29 CFR 1910.xxx ("OSHA Regulations (29 CFR) PART 1910 Occupational Safety and Health"). (CFR: Code of Federal Regulations.)

OSHA (http://www.osha.gov)

The application of standards is regulated in 29 CFR 1910.5 "Applicability of standards". The concept is similar to that used in Europe. Product-specific standards have priority over general standards insofar as they cover the relevant aspects. Once the standards are fulfilled, employers can assume that they have fulfilled the core requirements of the OSH Act with respect to the aspects covered by the standards.

In conjunction with certain applications, OSHA requires that all electrical equipment and devices that are used to protect workers be authorized by an OSHA-certified, "Nationally Recognized Testing Laboratory" (NRTL) for the specific application.

In addition to the OSHA regulations, the current standards defined by organizations such as NFPA and ANSI must be carefully observed and the extensive product liability legislation that exists in the US taken into account. Due to the product liability legislation, it is in the interests of manufacturing and operating companies that they carefully maintain the applicable regulations and are "forced" to fulfill the requirement to use state-of-the-art technology.

Third-party insurance companies generally demand that their customers fulfill the applicable standards of the standards organizations. Self-insured companies are not initially subject to this requirement but, in the event of an accident, they must provide verification that they have applied generally-recognized safety principles.

### A.4.3.2 NRTL listing

To protect employees, all electrical equipment used in the USA must be certified for the planned application by a "Nationally Recognized Testing Laboratory" (NRTL) certified by the OSHA. NRTLs are authorized to certify equipment and material by means of listing, labeling, or similar. Domestic standards (e.g. NFPA 79) and international standards (e.g. IEC/EN 61508 for E/E/PES systems) are the basis for testing.

### A.4.3.3 NFPA 79

Standard NFPA 79 (Electrical Standard for Industrial Machinery) applies to electrical equipment on industrial machines with rated voltages of less than 600 V. A group of machines that operate together in a coordinated fashion is also considered to be one machine.

For programmable electronics and communication buses, NFPA 79 states as a basic requirement that these must be listed if they are to be used to implement and execute safety-related functions. If this requirement is fulfilled, then electronic controls and communication buses can also be used for Emergency Stop functions, Stop Categories 0 and 1 (refer to NFPA 79 9.2.5.4.1.4). Just the same as EN 60204-1, NFPA 79 no longer specifies that the

electrical energy must be disconnected by electromechanical means for emergency stop functions.

The core requirements regarding programmable electronics and communication buses in accordance with NFPA 79 9.4.3:

1. Control systems that contain software-based controllers must:
   - In the event of a single fault
     (a) Initiate that the system switches to a safe shutdown mode
     (b) Prevent the system from restarting until the fault has been rectified
     (c) Prevent an unexpected restart
   - Offer the same level of protection as hard-wired controllers
   - Be implemented in accordance with a recognized standard that defines the requirements for such systems.
2. IEC 61508, IEC 62061, ISO 13849-1, ISO 13849-2 and IEC 61800-5-2 are specified as suitable standards in a note.

**Underwriter Laboratories Inc. (UL)** has defined a special category for "Programmable Safety Controllers" for implementing this requirement (code NRGF). This category covers control devices that contain software and are designed for use in safety-related functions.

A precise description of the category and a list of devices that fulfill this requirement can be found on the Internet at the following address:

NRGF (http://www.ul.com) → Online Certifications Directory → UL Category code/Guide information → search for category "NRGF"

**TUV Rheinland of North America**, Inc. is also an NRTL for these applications.

### A.4.3.4 ANSI B11

ANSI B11 standards are joint standards developed by associations such as the Association for Manufacturing Technology (AMT) and the Robotic Industries Association (RIA).

The hazards of a machine are evaluated by means of a risk analysis/assessment. The risk analysis is an important requirement in accordance with NFPA 79, ANSI/RIA 15.06, ANSI B11.TR-3 and SEMI S10 (semiconductors). The documented results of a risk analysis can be used to select a suitable safety system based on the safety class of the application in question.

## A.4.4 Machine safety in Japan

The situation in Japan is different from that in Europe and the US. Legislation such as that prescribed in Europe does not exist. Similarly, product liability does not play such an important role as it does in the US.

Instead of legal requirements to apply standards have been defined, an administrative recommendation to apply JIS (Japanese Industrial Standard) is in place. Japan bases its approach on the European concept and uses basic standards as national standards:

Table A-3 Japanese standards

| ISO/IEC number | JIS number | Comment |
|---|---|---|
| ISO12100 (EN 1050) | JIS B 9700, JIS B 9702 | Earlier designation TR B 0008 and TR B 0009 |
| ISO13849-1 | JIS B 9705-1 | - |
| ISO13849-2 | JIS B 9705-1 | - |
| IEC 60204-1 | JIS B 9960-1 | Without annex F or route map of the European foreword |
| IEC 61508-0 to -7 | JIS C 0508 | - |
| IEC 62061 | - | JIS number not yet assigned |

## A.4.5 Equipment regulations

In addition to the requirements of the guidelines and standards, company-specific requirements must be taken into account. Large corporations in particular (e.g. automobile manufacturers) make stringent demands regarding automation components, which are often listed in their own equipment specifications.

Safety-related issues (e.g. operating modes, operator actions with access to hazardous areas, EMERGENCY STOP concepts, etc.) should be clarified with customers early on so that they can be integrated in the risk assessment/risk reduction process.

## A.4.6 Other safety-related issues

### A.4.6.1 Information sheets issued by the Employer's Liability Insurance Association

Safety-related measures to be implemented cannot always be derived from directives, standards, or regulations. In this case, supplementary information and explanations are required.

Some regulatory bodies issue publications on an extremely wide range of subjects.

**Note**

These publications are in German. In some instances, they are also available in English and French.

Information sheets covering the following areas are available, for example:

- Process monitoring in production environments
- Axes subject to gravitational force
- Roller pressing machines
- Lathes and turning centers - purchasing/selling

These information sheets issued by specialist committees can be obtained by all interested parties (e.g. to provide support in factories, or when regulations or safety-related measures for plants and machines are defined). These information sheets provide support for the fields of machinery construction, production systems, and steel construction.

You can download the information sheets from the Internet address (http://www.bghm.de/) (website is in German, although some of the sheets are available in English):

1. First select the area "Arbeitsschützer", followed by the menu item "Praxishilfen" and finally "DGUV-Informationen".

### A.4.6.2 Additional references

- Safety Integrated, The Safety Program for Industries of the World (5th Edition and Supplement), Article No. 6ZB5 000-0AA01-0BA1
- Safety Integrated - Terms and Standards - Machine Safety Terminology (Edition 04/2007), Article No. E86060-T1813-A101-A1

# A.5 Manuals and technical support

## A.5.1 Overview of the manuals

You can find manuals here with additional information that can be downloaded

- **Operating instructions**
  Installing, commissioning and maintaining the inverter. Advanced commissioning
  - CU250S-2 operating instructions (https://support.industry.siemens.com/cs/ww/en/view/109482997)
  - CU240B/E-2 operating instructions (https://support.industry.siemens.com/cs/ww/en/view/109482994)
  - SINAMICS G120C operating instructions. (https://support.industry.siemens.com/cs/ww/en/view/109482993)
  - Operating instructions SINAMICS G120D with CU240D-2 (https://support.industry.siemens.com/cs/ww/en/view/109477366)
  - Operating instructions SINAMICS G120D with CU250D-2 (https://support.industry.siemens.com/cs/ww/en/view/109477365)
  - SINAMICS G110M operating instructions (https://support.industry.siemens.com/cs/ww/en/view/109478193)
  - SIMATIC ET200proFC-2 operating instructions (https://support.industry.siemens.com/cs/ww/en/view/109478246)
- **Function Manuals**
  - "Safety Integrated" function manual (https://support.industry.siemens.com/cs/ww/ene/view/109751320)
    Configuring PROFIsafe.
    Installing, commissioning and operating failsafe functions of the inverter (this manual).
  - "Fieldbus" function manual (https://support.industry.siemens.com/cs/ww/en/view/109751350)
    Configuring fieldbuses
  - "Basic positioner" function manual (https://support.industry.siemens.com/cs/ww/en/view/109477922)
    Commissioning the basic positioner

- List Manuals
  - CU240B/E-2 List Manual (https://support.industry.siemens.com/cs/ww/en/view/109482961)
  - CU250S-2 List Manual (https://support.industry.siemens.com/cs/ww/en/view/109482981)
  - SINAMICS G120C List Manual (https://support.industry.siemens.com/cs/ww/en/view/109482977)
  - List manual SINAMICS G120D (https://support.industry.siemens.com/cs/ww/en/view/109477255)
  - SINAMICS G110M List Manual (https://support.industry.siemens.com/cs/ww/en/view/109478707)
  - SIMATIC ET 200pro FC-2 List Manual (https://support.industry.siemens.com/cs/ww/en/view/109478711)
- SIMATIC ET 200pro operating instructions (https://support.industry.siemens.com/cs/ww/en/view/21210852)
  Distributed ET 200pro I/O system
- SIMATIC ET 200pro motor starters manual (https://support.industry.siemens.com/cs/ww/en/view/22332388)
  ET 200pro motor starter in the distributed ET 200pro I/O system

## Finding the most recent edition of a manual

If there a multiple editions of a manual, select the latest edition:

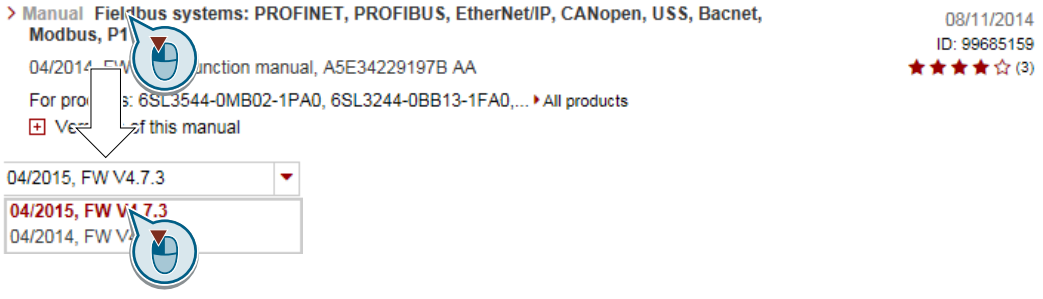


## Configuring a manual

Further information about the configurability of manuals is available in the Internet:

MyDocumentationManager (https://www.industry.siemens.com/topics/global/en/planning-efficiency/documentation/Pages/default.aspx).

Select "Display and configure" and add the manual to your "mySupport-documentation":

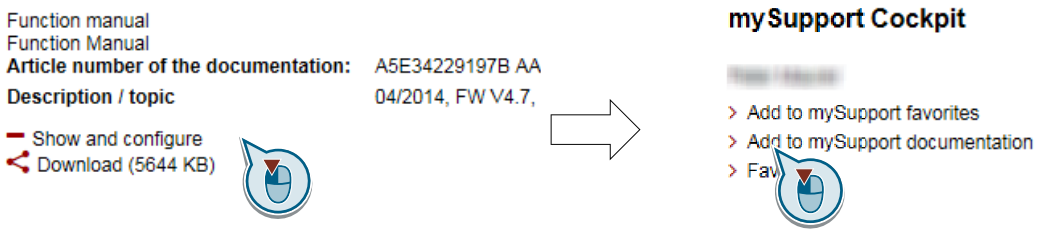


Not all manuals can be configured.

The configured manual can be exported in RTF, PDF or XML format.

## A.5.2 Configuring support

### Catalog

Ordering data and technical information for SINAMICS G inverters.

Catalogs for download or online catalog (Industry Mall):

Everything about SINAMICS G120 (www.siemens.en/sinamics-g120)

### SIZER

The configuration tool for SINAMICS, MICROMASTER and DYNAVERT T drives, motor starters, as well as SINUMERIK, SIMOTION controllers and SIMATIC technology

SIZER on DVD:

Article number: 6SL3070-0AA00-0AG0

Download SIZER (https://support.industry.siemens.com/cs/ww/en/view/54992004)

### EMC (electromagnetic compatibility) technical overview

Standards and guidelines, EMC-compliant control cabinet design

EMC overview (https://support.industry.siemens.com/cs/ww/en/view/103704610)

### EMC Guidelines configuration manual

EMC-compliant control cabinet design, potential equalization and cable routing

EMC installation guideline (http://support.automation.siemens.com/WW/view/en/60612658)

### Safety Integrated for novices technical overview

Application examples for SINAMICS G drives with Safety Integrated

Safety Integrated for novices (https://support.industry.siemens.com/cs/ww/en/view/80561520)

## Safety Evaluation Tool

The TÜV-approved "Safety Evaluation Tool" for the standards IEC 62061 and ISO 13849-1 helps you to evaluate the safety functions of your machine. This online tool provides you with a standards-compliant report that can be integrated in the documentation as proof of safety:

Safety Evaluation Tool (www.siemens.com/safety-evaluation-tool)

### A.5.3 Product Support

You can find additional information about the product on the Internet:

Product support (http://www.siemens.com/automation/service&support)

This URL provides the following:

- Up-to-date product information (product announcements)
- FAQs
- Downloads
- The Newsletter contains the latest information on the products you use.
- The Knowledge Manager (Intelligent Search) helps you find the documents you need.
- Users and specialists from around the world share their experience and knowledge in the Forum.
- You can find your local representative for Automation & Drives via our contact database under "Contact & Partner".
- Information about local service, repair, spare parts and much more can be found under "Services".

# Index


## 3

3RK3 (modular safety system), 72, 88
3SK1 (safety relay), 70, 86

## A

Acceleration voltage tolerance, 132
Acceptance mode, 155, 163, 354, 363
Acceptance test, 100, 171, 371
    Complete, 171
    F-DI status, 369
    Reduced scope, 173, 323
    SBC, 350
    SDI, 362, 363, 364
    SLS, 353, 354, 355
    SS1 (Basic Functions), 345, 346
    SS1 (Extended Functions), 348, 349
    SSM, 357, 358
    STO (Basic Functions), 341, 342
    STO (Extended Functions), 343, 344
Acceptance test record, 171
Acknowledge
    F-DI, 260
    internal event, 260
    PROFIsafe, 52, 53, 260
    Standard, 260
    with a failsafe signal, 260
Actual value tolerance, 132
Alarm, 279
Application example, 56

## B

Back up parameters, 169
Basic functions, 22, 59, 60
Bit pattern test, 117, 136

## C

Cable break, 188, 191, 207, 210
Cat. (category), 328
Catalog, 389
CDS (Command Data Set), 125, 126, 165, 166
Centrifuge, 44
Certification, 328
Circuit diagram, 371
Commissioning, 100
    Offline, 102
    Online, 102
    Overview, 107
Commissioning engineer, 15
Compound braking, 28
Configuring support, 389
Consistency, 116, 135
Consistent signals, 116, 135
Contact bounce, 117, 136
Control mode, 26
Control Unit
    CU230P-2, 22, 24
    CU240B-2, 22, 24
    CU240D-2, 22, 24
    CU240E-2, 22, 24
    CU250D-2, 22, 24
    CU250S-2, 22, 24
Control word 1, 52, 53
Control word 5, 54
Copy
    Series commissioning, 170, 173
Copy parameter
    Series commissioning, 173
Copy parameters
    Series commissioning, 170
Countersignatures, 371
Crane trolley, 43

## D

Data backup, 371
Data set changeover, 125, 126, 165, 166
DC braking, 28
Debounce time, 333, 336
Delay time, 132
Delay time actual value sensing, 337
DI (Digital Input), 60, 126, 165, 166
Digital inputs
    Multiple assignment, 125, 126, 165, 166
Discrepancy, 73, 89, 116, 135, 253, 262
    Filter, 116, 135
    SDI, 249
    SLS, 229
    SS1, 208, 210
    STO, 188
    Tolerance time, 116, 135
Distributed I/O, 76, 90

DO (digital output), 93
Download, 169

## E

EC Declaration of Conformity, 329
EC type-examination certificate, 328
Electromechanical sensor, 63, 66, 67, 68, 69
EMERGENCY STOP, 32, 38
Emergency Stop button, 32
Emergency Stop command device, 66, 83
EMERGENCY SWITCHING OFF, 32, 38
EN 61800-5-2, 35
EN 60204-1, 32, 38
EN 61800-5-2, 31
Encoderless, 26
Encoderless actual value sensing, 132
End user, 370
ET 200pro, 76, 90
ET 200S, 76, 90
ET 200SP, 76, 90
Extended functions, 22, 59, 60

## F

F0 rail, 48, 65
F1 rail, 48, 65
Factory settings
    Restoring the, 104
Failsafe acknowledgment, 138, 262
Fail-safe acknowledgment, 278
Failsafe digital input, 100, 133, 139
Fail-safe digital input, 60
Fail-safe digital output, 93
    Feedback input, 145
    Safe state signal selection, 145
    Signal sources, 145
    Test mode, 145
Fault, 279
Fault detection, 176
Fault response
    SDI, 251
    SLS, 231
    SS1, 212
    SSM, 258
    STO, 257
F-CPU, 49
F-DI (Failsafe Digital Input), 100
F-DI (Fail-safe Digital Input), 60
F-DI status
    Acceptance test, 369
F-DO (Fail-safe Digital Output), 93
Filter
    Contact bounce, 117, 136
    Discrepancy, 116, 135
    On/off test, 117, 136
Filter for fail-safe digital input, 116
Firmware update, 323
Firmware version, 294, 310, 370
Flying restart, 28, 132
Forced checking procedure, 119, 129, 139, 326
    Extended Functions, 129
    Failsafe digital output, 140
    Performing, 178
Forced dormant error detection
    setting, 119
F-RSM, 65
F-Switch, 48
Function Manual, 386
Function table, 370
Functional expansions, 173

## G

Gearbox, 132
Gearbox ratio, 132, 153
Group drive, 26

## H

Horizontal conveyors, 40
Hotline, 391

## I

I/O module, 76, 79, 90, 92
Induction motor, 26
Industry Mall, 389
Internal event, 255, 277
Inverter
    Update, 323
Inverter components, 294, 310
Inverter signals, 277
I-slave, 50

## L

Limit value violation, 255
Line contactor, 31
List Manual, 386
Load revolutions, 132

## M

Machine description, 370
Machine manufacturer, 15, 326
Main screen form (basic functions), 115
Manufacturer, 370
Manufacturer declaration, 328
Minimum current, 132
Mission time, 326
Modular Safety System, 72, 88
Motor data identification, 28
Motor holding brake, 31
Motor revolutions, 132
Multiple assignment
    Digital inputs, 125, 126, 165, 166

## N

Number of pole pairs, 132

## O

OFF3, 255
Offline commissioning, 102, 169
On/off test, 117, 136
Online commissioning, 102
Operating instruction, 17
Operating Instructions, 386
Operating mode, 370
OSSD (output signal switching device), 74
Overview
    Chapter, 18, 19
    Commissioning, 107

## P

Performance level, 328
PFHD (Probability of Failure per Hour), 326
PL (Performance level), 328
Plant manufacturer, 15
PLC program, 371
Position switches, 83
Pressure cylinder, 43
Printing machine, 43
Probability of failure, 326
Probability of Failure per Hour, 326
Procedure, 17
PROFIsafe, 47, 100
    Control word 1, 52, 53
    Control word 5, 54
    Start communication, 168
    Status word 1, 52, 53, 257
    Status word 5, 54
    Telegram 30, 51
    Telegram 900, 51
Protection against jamming, 43

## Q

Questions, 391

## R

Reference speed, 154
Replace
    Control Unit, 323
    Gear unit, 323
    Hardware, 323
    Motor, 323
    Power Module, 323
Reset
    Parameter, 104
Response time, 331
Risk analysis, 26
Risk assessment, 26
Rolling shutter gate, 43

## S

S_STW (safety control word), 51
S_ZSW (safety status word), 51
S7-1500, 76, 90
S7-300, 76, 90
Safe Brake Ramp, 215
Safe Brake Relay, 119
Safety functions
    Activating the, 24
Safety integrity level, 328
Safety relay, 70, 86
SAM (Safe Acceleration Monitor), 146, 151, 203
    active, 277
SBC (Safe Brake Control), 34
    Acceptance test, 350
    Requested, 194, 277
SBR (Safe Brake Ramp), 146, 201, 215, 221, 222
    active, 277
SDI (Safe Direction), 42
    Acceptance test, 362, 363, 364
    active, 277
    Delay time, 161

deselect, 277
Discrepancy, 249
Fault response, 251
select, 243
Switch off the motor, 244
Switch on motor, 246
Tolerance, 161
Self-test, 119, 139
Self-test (forced checking procedure), 129
Serial number, 370
Series commissioning, 170, 173
Service personnel, 15
Setpoint speed limit, 219
Shared Device, 49, 167
Signals, 277
SIL (Safety Integrity Level), 328
SIMATIC ET 200pro FC-2, 22, 24, 58
SIMATIC S7 block, 57
SINAMICS G110M, 22, 24
SINAMICS G120
CU230P-2, 22, 24
CU240B-2, 22, 24
CU240E-2, 22, 24
CU250S-2, 22, 24
SINAMICS G120C, 22, 24
SINAMICS G120D
CU240D-2, 22, 24
CU250D-2, 22, 24
SIZER, 389
SLS (Safely Limited Speed), 39, 214
active, 277
Braking ramp monitoring, 154
Delay time, 154
deselect, 215, 277
Level, 221
Level active, 223, 277
Monitoring mode, 214
Monitoring threshold, 222
select, 215, 217, 219
Select level, 223, 277
Speed monitoring, 154
Standstill monitoring, 225
Switch off the motor, 225
Switching monitoring threshold, 221
Switching over speed monitoring, 222, 224
SLS (Safely-Limited Speed)
Acceptance test, 353, 354, 355
Discrepancy, 229
Fault response, 231
Response, 153
Setpoint speed limit, 153
Switch on motor, 227
Speed monitoring, 255
Speed ratio, 132
Spindle drive, 41
SS1 (Safe Stop 1), 36
Acceptance test, 345, 346, 348, 349
active, 277
Delay time, 146, 147, 148, 150, 151
Delay time for SBR, 146
deselect, 277
Discrepancy, 207, 210
Fault response, 212
Monitoring mode, 146
Monitoring time, 148
Reference speed, 148
Reference speed (reference velocity), 148
Reference velocity (reference speed), 148
select, 146, 199, 201, 203
Shutdown speed, 146, 147, 149, 150, 151
Speed tolerance, 150
Standstill monitoring, 146, 147, 201, 203
Switch off the motor, 205
Tolerance, 146, 151
Zero speed detection, 149
SSM (Safe Speed Monitoring), 44
Acceptance test, 357, 358
Fault response, 258
Feedback signal active, 234, 277
Filter, 158
Hysteresis, 157
Speed limit, 156
Switch off the motor, 235
Switch on motor, 239
Time response, 234
Standard acknowledgment, 262, 278
STARTER
Download, 102
Status word 1, 52, 53
Status word 5, 54
STO (Safe Torque Off), 31
Acceptance test, 341, 342, 343, 344
active, 277
Discrepancy, 188
Fault response, 257
select, 31, 277
Stop
Category 1, 255
STOP A, 212, 231, 251, 255
STOP B, 231, 251, 255
Stop Category 0, 32
Stop category 1, 38
STOP F, 256, 258
Support, 391

Switch-off signal paths, 119, 139
Switch-off signal paths (forced checking procedure), 129
Switchover
    SLS level, 221
Symbols, 17
Synchronous motor, 26
System description, 370

## T

Telegram 30, 51
Telegram 900, 51
Test interval, 326
Test mode F-DO, 144
Test signals, 117, 136
Test stand, 27
Test stop
    Performing, 180
Test stop (forced checking procedure), 129
Trace, 371
Turning machine, 40

## U

Update
    Firmware, 323

## V

V/f control, 26
Vector control, 26
Version
    Firmware, 370
    Hardware, 370
    Safety function, 370

## W

Winders, 27
Wire breakage, 116, 135

## Further information

SINAMICS inverters:
**www.siemens.com/sinamics**

Safety Integrated:
**www.siemens.com/safety-integrated**

Siemens AG
Digital Factory
Motion Control
Postfach 3180
91050 ERLANGEN
Germany

**Scan the QR code for additional information about Safety Integrated.**