User-friendly documentation
TÜV SÜD
DocCert
Checked documentation
comprehensible
complete
safe
Voluntary test according to TPS-Standard PPP 13010

SEW EURODRIVE

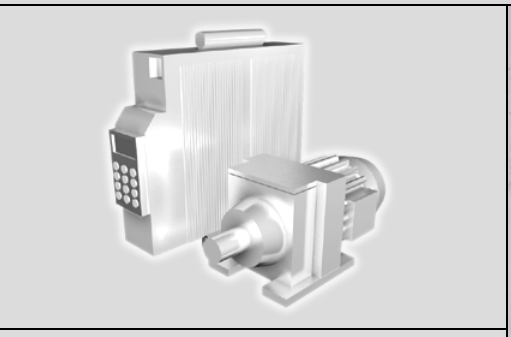

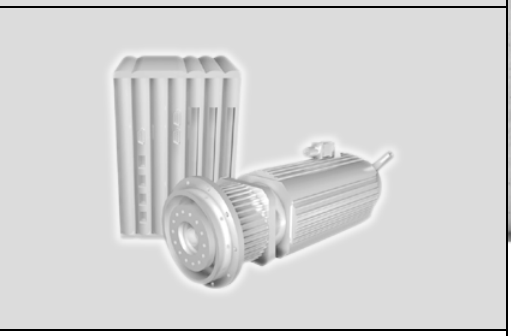

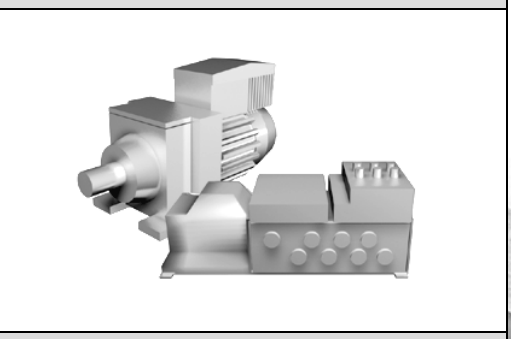

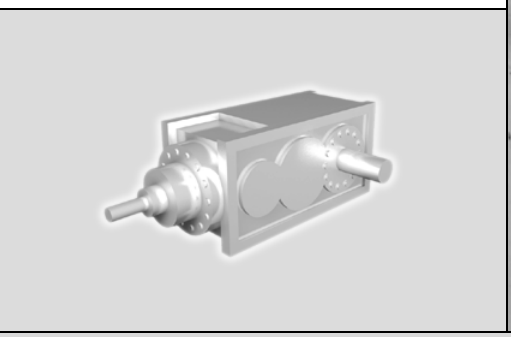

MOVIMOT® MM..C

Edition 11/2006

11441410 / EN

Operating Instructions

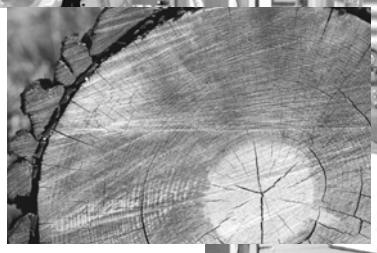

SEW EURODRIVE

1 General Notes ... 6
1.1 Design of the safety notes ... 6
1.2 Right to claim under warranty ... 6
1.3 Exclusion of liability ... 6

2 Safety Notes ... 7
2.1 General ... 7
2.2 Target group ... 7
2.3 Designated use ... 7
2.4 Further applicable documents ... 8
2.5 Transportation, storage ... 8
2.6 Installation ... 8
2.7 Electrical connection ... 9
2.8 Safe disconnection ... 9
2.9 Operation ... 9

3 Revision Status ... 10
3.1 Revisions since the previous version ... 10

4 Unit Design ... 12
4.1 MOVIMOT® inverter (standard version) ... 12
4.2 Unit designations (MOVIMOT® standard version) ... 13
4.3 MOVIMOT® inverter (with integrated AS-interface) ... 16
4.4 Unit designations (MOVIMOT® with integrated AS-interface) ... 17

5 Mechanical Installation ... 20
5.1 MOVIMOT® gearmotor ... 20
5.2 Modular terminal box ... 22
5.3 Mounting MOVIMOT® inverter close to the motor with option P2.A ... 24
5.4 Option MLU11A / MLG..A / MLK11A ... 25
5.5 MBG11A option ... 26
5.6 MWA21A option ... 27
5.7 URM option ... 27
5.8 Option MNF11A ... 28
5.9 Tightening torques ... 29

6 Electrical Installation for MOVIMOT® Standard Version ... 31
6.1 Installation instructions ... 31
6.2 Connection of MOVIMOT® basic unit ... 35
6.3 MOVIMOT® plug connector ... 36
6.4 Connection MOVIMOT® options ... 37
6.5 Connection of RS-485 bus master ... 44
6.6 Connection between MOVIMOT® and motor with mounting close to the motor ... 45

7 Electrical Installation of MOVIMOT® with Integrated AS-Interface ... 49
7.1 Installation instructions ... 49
7.2 Connection options with integrated AS-interface ... 52
7.3 Connection of MOVIMOT® MM../AVSK (connection option A) ... 55
7.4 Connection of MOVIMOT® MM../AZSK (connection option B) ... 56
7.5 Connection of MOVIMOT® MM../AND3/AZSK (connection option C) ... 57
7.6 Connection MOVIMOT® options ... 58
7.7 Connection of DBG60B terminal ... 59
7.8 PC connection ... 62
7.9 Connection between MOVIMOT® and motor with mounting close to the motor ... 63

8 Startup: MOVIMOT® Standard Version ... 67
8.1 Important notes on startup ... 67
8.2 Description of the controls ... 68
8.3 Description of DIP switch S1 ... 70
8.4 Description of DIP switch S2 ... 72
8.5 Additional functions for MM..C-503-00 ... 75
8.6 Startup with binary control (control via terminals) ... 100
8.7 Startup with options MBG11A or MLG11A ... 102
8.8 Startup with MWA21A option (speed control module) ... 104
8.9 Startup with external AS-interface binary slave MLK11A ... 107
8.10 Supplementary notes for installation close to the motor ... 110

9 Startup: MOVIMOT® with Integrated AS-Interface ... 112
9.1 Important startup instructions ... 112
9.2 Description of the controls ... 113
9.3 Description of the DIP switches S3 ... 115
9.4 Description of the DIP switches S4 ... 117
9.5 Additional functions for MM..C-503-30 ... 118
9.6 Startup procedure ... 126
9.7 Advanced startup with MOVITOOLS® ... 132
9.8 Supplementary notes for installation close to the motor ... 137

10 Startup with Communication Interface/Fieldbus ... 139
10.1 Startup procedure ... 139
10.2 Coding process data items ... 141
10.3 Function with RS-485 master ... 144

11 Operation ... 149
11.1 Operating display of MOVIMOT® standard version ... 149
11.2 MOVIMOT® operating display with integrated AS-interface ... 150
11.3 Keypads MBG11A and MLG11A for MOVIMOT® standard design ... 152
11.4 Speed control module MWA21A for MOVIMOT® standard design ... 153
11.5 MOVITOOLS® Manual Mode for MOVIMOT® with integrated AS-interface ... 154
11.6 DBG60B keypad for MOVIMOT® with integrated AS-interface ... 158

12 Service ... 167
12.1 Fault list MOVIMOT® standard version ... 167
12.2 Diagnostics for MOVIMOT® standard version ... 170
12.3 Fault list MOVIMOT® with integrated AS-interface ... 172
12.4 MOVITOOLS® diagnostics for MOVIMOT® with integrated AS-interface ... 174
12.5 Inspection and maintenance intervals ... 179
12.6 Inspection maintenance of the motor ... 180
12.7 Inspection and maintenance work on the brake ... 182
12.8 SEW service ... 188
12.9 Extended storage ... 189
12.10 Waste disposal ... 189

13 Technical Data: MOVIMOT® Standard Version ... 190
13.1 Motor with operating point 400 V/50 Hz or 400 V/100 Hz ... 190
13.2 Motor with operating point 460 V/60 Hz ... 192
13.3 Technical data: options ... 193
13.4 Working air gap, braking torque, brake ... 196
13.5 Permissible ball bearing types ... 196
13.6 Integrated RS-485 interface ... 197
13.7 Assignment of internal braking resistors ... 197
13.8 Assignment of external braking resistors ... 198
13.9 Resistance and assignment of the brake coil ... 198

14 Technical Data: MOVIMOT® with Integrated AS-Interface 199
14.1 Motor with operating point 400 V/50 Hz or 400 V/100 Hz 199
14.2 Technical data: options 200
14.3 Working air gap, braking torque, brake 201
14.4 Permissible ball bearing types 201
14.5 Assignment of internal braking resistors 201
14.6 Assignment of external braking resistors 202
14.7 Resistance and assignment of the brake coil 202

15 Index 203

Address List 208

1 General Notes

1.1 Design of the safety notes

The safety notes in these operating instructions are designed as follows:

Symbol	SIGNAL WORD
	Nature and source of danger. Possible consequence(s) if the safety notes are disregarded. • Measure(s) to prevent the danger.

Symbol	Signal word	Meaning	Consequences if disregarded
Example:	DANGER	Imminent danger	Severe or fatal injuries
General danger	WARNING	Possible dangerous situation	Severe or fatal injuries
Specific danger, e.g. electric shock	CAUTION	Possible dangerous situation	Minor injuries
STOP	STOP	Possible damage to property	Damage to the drive system or its environment
	NOTE	Useful information or tip Simplifies the operation of the drive system	

1.2 Right to claim under warranty

You must follow the information in the operating instructions to ensure trouble-free operation and for the fulfillment of any rights to claim under the limited warranty. Read the operating instructions before you start working with the unit.

Make sure that the operating instructions are available to persons responsible for the system and its operation as well as to persons who work independently on the unit. You must also ensure that the documentation is legible.

1.3 Exclusion of liability

You must comply with the information contained in these operating instructions to ensure safe operation of the MOVIMOT® MM..C inverter and to achieve the specified product characteristics and performance requirements. SEW-EURODRIVE assumes no liability for injury to persons or damage to equipment or property resulting from non-observance of these operating instructions. In such cases, any liability for defects is excluded.

2 Safety Notes

The following basic safety notes are intended to avoid injury to persons and damage to property. The operator must make sure that the basic safety notes are read and observed. Make sure that persons responsible for the system and its operation, as well as persons who work independently on the unit, have read through the operating instructions carefully and understood them. If you are unclear about any of the information in this documentation, or if you require further information, please contact SEW-EURODRIVE.

2.1 General

Never install or operate damaged products. In the event of damage, submit a complaint to the shipping company immediately.

During operation, MOVIMOT® drives, depending on their enclosure, may have live, uninsinuated, and sometimes moving or rotating parts as well as hot surfaces.

Removing required covers without authorization, faulty use as well as incorrect installation or operation may result in severe injuries to persons or damage to property.

Consult the documentation for additional information.

2.2 Target group

Only **electricians** should perform installation, startup, fault repair and maintenance work (observe IEC 60364 or CENELEC HD 384 or DIN (German Industrial Standard) VDE 0100 and IEC 60664 or DIN VDE 0110 as well as national accident prevention guidelines).

Electricians in the context of these basic safety notes are persons familiar with installation, assembly, startup and operation of the product who possess the necessary qualifications for their occupation.

All work in further areas of transportation, storage, operation and waste disposal must be carried out by persons who are trained appropriately.

2.3 Designated use

MOVIMOT® inverters are components intended for installation in electrical systems or machines.

When installed in machines, startup of the MOVIMOT® inverter (i.e. start of designated operation) is prohibited until it is determined that the machine meets the requirements stipulated in EC directive 98/37/EC (Machine directive).

Startup (i.e. the start of designated operation) is only permitted with adherence to the EMC directive (89/336/EEC).

MOVIMOT® inverters meet the requirements stipulated in the low voltage directive 73/23/EEC. The standards contained in the declaration of conformity are used for MOVIMOT® inverters.

Technical data and information on the connection requirements are given on the nameplate and in the documentation; they must be strictly observed.

Safety functions

MOVIMOT® inverters may not perform any safety functions unless they are described and explicitly approved.

For safety applications, ensure that the information in the following publications is observed.

- Safe Disconnection for MOVIMOT® – Conditions
- Safe Disconnection for MOVIMOT® – Applications

In safety applications, use only those components that were explicitly delivered in this version by SEW-EURODRIVE.

Hoist applications

MOVIMOT® inverters are suited to hoist applications to only a limited degree: see page 86.

MOVIMOT® inverters are not designed for use as safety devices in hoist applications.

2.4 Further applicable documents

The following publication should also be observed:

- Operating Instructions, "DR/DT/DV AC Motors, CT/CV Asynchronous Servomotors"

2.5 Transportation, storage

Observe the notes on transportation, storage and proper handling. Observe the climatic conditions as stated in the section "Technical Data". Tighten installed transportation eyebolts. They are designed for the weight of the MOVIMOT® drive. Do not mount any additional loads. If required, use sufficiently rated, appropriate handling equipment (e.g. rope guides).

2.6 Installation

Installation and cooling of the units must take place according to the guidelines listed in the pertinent documentation.

Protect MOVIMOT® inverters from excessive strain.

The following applications are prohibited unless the unit is explicitly designed for such use:

- Use in potentially explosive atmospheres
- Use in areas containing harmful oils, acids, gases, vapors, dust, radiation, etc.
- Use in non-stationary applications with strong mechanical oscillation and impact loads; see section "Technical data".

2.7 Electrical connection

Observe applicable national accident prevention guidelines when working on live MOVIMOT® inverters (e.g. BGV A3).

Electrical installation must be carried out according to pertinent regulations (e.g., cable cross sections, fusing, protective conductor connection). The documentation contains further notes.

You will find notes on EMC-compliant installation, e.g. shielding, grounding, configuration of filters and routing of lines, in the MOVIMOT® inverter documentation. The manufacturer of the system or machine is responsible for maintaining the limits established by the EMC legislation.

Preventive measures and protection devices must correspond to the regulations in force (e.g. EN 60204 or EN 61800-5-1).

2.8 Safe disconnection

MOVIMOT® inverters meet all requirements for safe disconnection of power and electronic connections in accordance with EN 61800-5-1. In order to ensure a safe disconnection, all connected circuits must also satisfy the requirements for safe disconnection.

2.9 Operation

Systems into which MOVIMOT® inverters are incorporated must be equipped with additional monitoring and protection devices, if necessary, according to the applicable safety regulations, e.g. the law governing technical equipment, accident prevention regulations, etc. When used in applications with an elevated potential for risk, additional preventive measures may be necessary. Changes to the MOVIMOT® inverter using the operating software are permitted.

Do not touch live components or power connections immediately after disconnecting the MOVIMOT® inverters from the supply voltage because there may still be some charged capacitors. Wait at least 1 minute after the supply voltage is switched off.

As soon as supply voltages are present at the MOVIMOT® inverter, the terminal box must be closed (i.e. the MOVIMOT® inverter must be screwed on).

If the operation LED and other display elements are no longer illuminated, this does not mean that the unit has been disconnected from the mains and no longer carries any voltage.

Mechanical blocking or internal safety functions of the unit can cause a motor standstill. Removing the cause of the failure or performing a reset can cause the drive to restart automatically. If, for safety reasons, this is not permitted for the driven machine, disconnect the unit from the mains before beginning to correct the fault.

Danger of burns: The surface temperature of the MOVIMOT drive and the external options, e.g. the braking resistor heat sink, can exceed 60 °C during operation.

3 Revision Status

3.1 Revisions since the previous version

The following section lists the main revisions made to the individual sections from edition 08/2003, part number 11218126 (EN).

General Notes

- The section "General Notes" has been completely revised.

Safety Notes

- The section "Safety Notes" has been completely revised.

Revision Status

- New section "Revision Status"

Mechanical Installation

- New section "Option MNF11A"
- New section "Tightening torques"

Electrical Installation: MOVIMOT® Standard Version

- Section "Installation regulations"
  - New subsection "Earth-leakage circuit breaker"
  - New subsection "Mains contactor"
  - New subsection "Notes on PE connection"
  - New subsection "EMC-compliant installation"
  - Amended subsection "UL-compliant installation"
- Section "Connection of MOVIMOT® options"
  - New subsection "Connection of MLU13A option"
  - New subsection "Connection of BMG option"
  - New subsection "Connection of MNF11A option"
- Section "Connection between MOVIMOT® and motor when mounting close to the motor"
  - New overview "Overview of the connection between MOVIMOT® and motor"
  - New subsection "Cable and pin assignment"

Electrical Installation: MOVIMOT® with Integrated AS-Interface

- Section "Installation regulations"
  - New subsection "Earth-leakage circuit breaker"
  - New subsection "Mains contactor"
  - New subsection "Notes on PE connection"
  - New subsection "EMC-compliant installation"
  - Amended subsection "UL-compliant installation"
- Section "Connection of MOVIMOT® options"
  - New subsection "MNF11A option"
- New section "Connection of DBG60B keypad"
- New section "PC connection"
- Section "Connection between MOVIMOT® and motor when mounting close to the motor"
  - New overview "Overview of the connection between MOVIMOT® and motor"
  - New subsection "Cable and pin assignment"

Startup: MOVIMOT® Standard Version

- Section "Available additional functions for MM..C-503-00"
  - Overview of additional functions amended
  - New subsection "Additional function 13"
  - New subsection "Additional function 14"

Startup: MOVIMOT® with Integrated AS-Interface

- Section "Available additional functions for MM..C-503-30"
  - Overview amended
  - New subsection "Additional function 14"

Operation

- Section "Operation" has been completely revised
- New section "MBG11A and MLG11A keypads for MOVIMOT® standard version"
- New section "MWA21A speed control module for MOVIMOT® standard version"
- New section "MOVITOOLS® Manual Mode for MOVIMOT® with AS-interface"
- New section "DBG60B keypad for MOVIMOT® with AS-interface"

Service

- Section "Service" has been completely revised
- New section "Diagnostics for MOVIMOT® standard version"
- New section "MOVITOOLS® diagnostics for MOVIMOT® with AS-interface"
- Section "Inspection and maintenance work on the motor"
  - New subsection "Lubricating the backstop"
- New section "Extended storage"
- New section "Waste disposal"

Technical Data: MOVIMOT® Standard Version

- Amended section "Motor with operating point 400 V/50 Hz or 400 V/100 Hz"
- Amended section "Motor with operating point 460 V/60 Hz"
- Section "Technical data: options"
  - New subsection "MLU13A"
  - New subsection "MNF11A"
- New section "Working air gap, braking torque of break"
- New section "Permitted ball bearing types"
- Section "Assignment of external braking resistors"
  - New subsection "BW100... BW200"
  - New subsection "BW150... BW068"

Technical Data: MOVIMOT® with Integrated AS-Interface

- Amended section "Motor with operating point 400 V/50 Hz or 400 V/100 Hz"
- New section "Technical data: options"
  - New subsection "MLU13A"
- New section "Working air gap, braking torque of break"
- New section "Permitted ball bearing types"
- Section "Assignment of external braking resistors"
  - New subsection "BW100... BW200"
  - New subsection "BW150... BW068"

4 Unit Design

4.1 MOVIMOT® inverter (standard version)

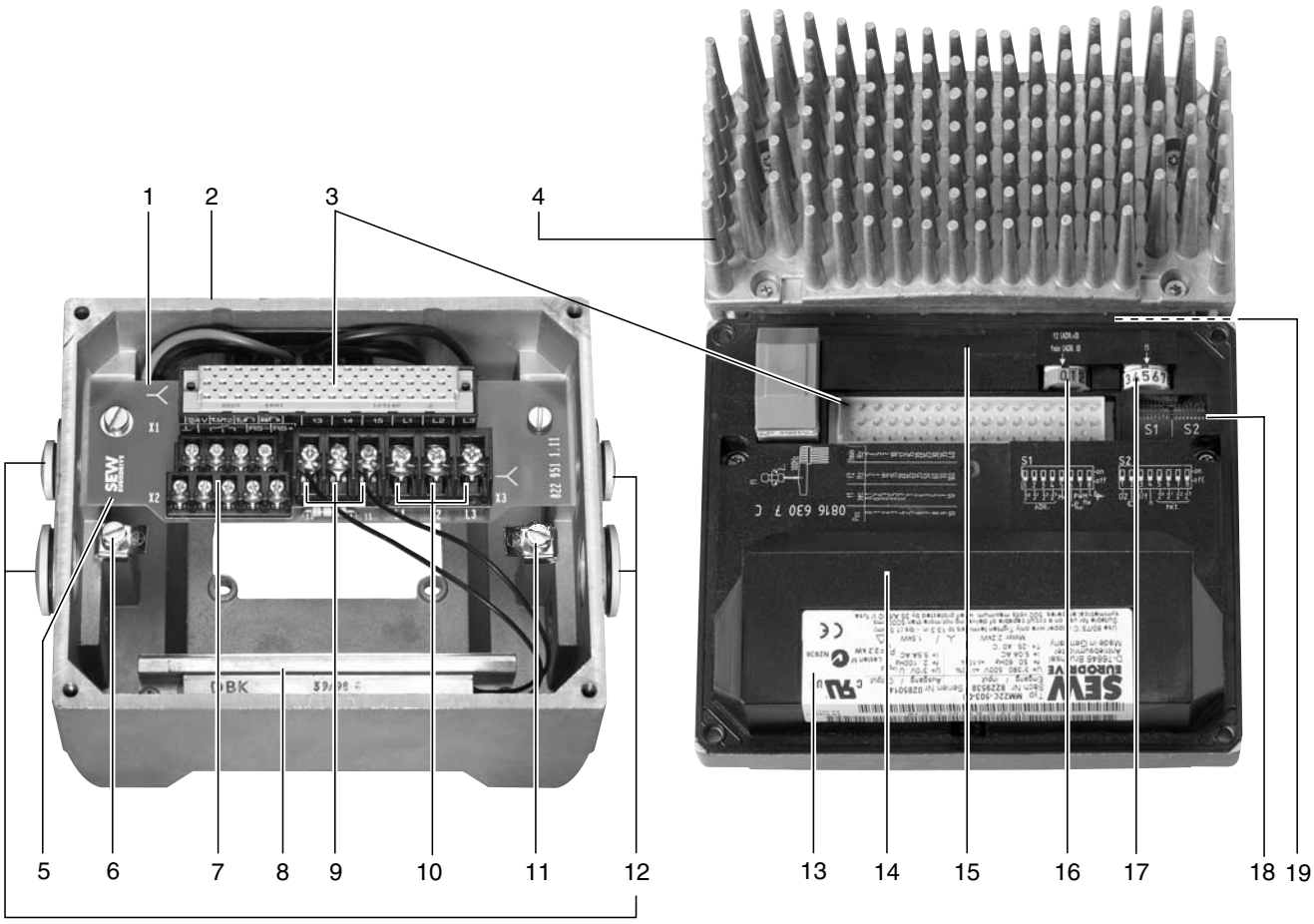

1. Identification of connection type
2. Terminal box (size 2 used as example)
3. Connection plug between connection unit and inverter
4. MOVIMOT® inverter with heat sink (size 2 used as example)
5. Connection unit with terminals
6. Screw for PE connection ×
7. Electronics terminal strip X2
8. Internal braking resistor BW. (standard in motors without brake)
9. Connection of brake coil (X3). For motors without brake: Connection of internal braking resistor BW. (standard)
10. Mains connection L1, L2, L3 (X3) (suitable for 2 x 4 mm^2)
11. Screw for PE connection ×
12. Cable glands
13. Electronic nameplate
14. Protection cover for inverter electronics
15. Setpoint potentiometer f1 (not visible), access from the top of the MOVIMOT® inverter via a screw fitting.
16. Setpoint switch f2 (green)
17. Switch t1 for integrator ramp (white)
18. DIP switches S1 and S2 (for settings, see section "Startup")
19. Status LED (visible from the top of the MOVIMOT® inverter, see sec. "Operation")

4.2 Unit designations (MOVIMOT® standard version)

Sample motor nameplate

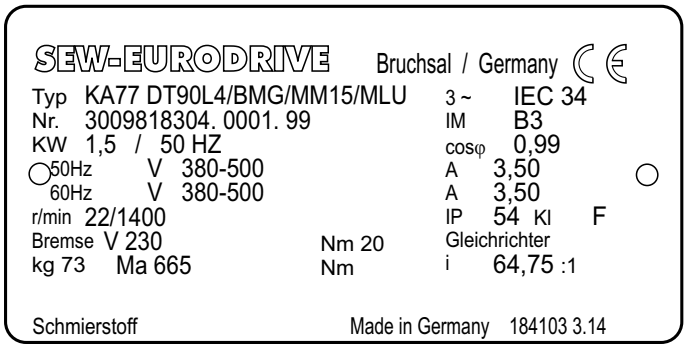

06491AXX

KA 77 DT 90L4 BMG/MM15/MLU

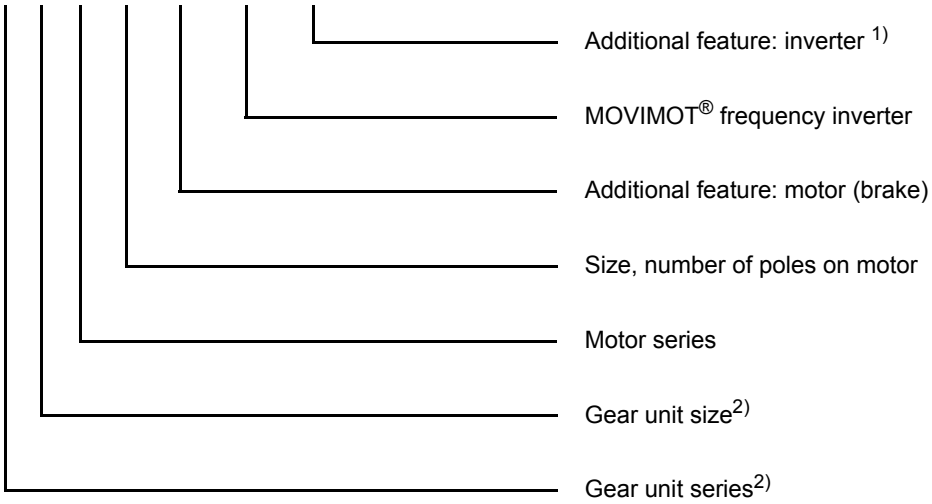

1) Only options installed at the factory are listed on the nameplate.
2) Detailed information about gearmotor combinations can be found in the "MOVIMOT® Gearmotors" catalog.

Sample inverter nameplate

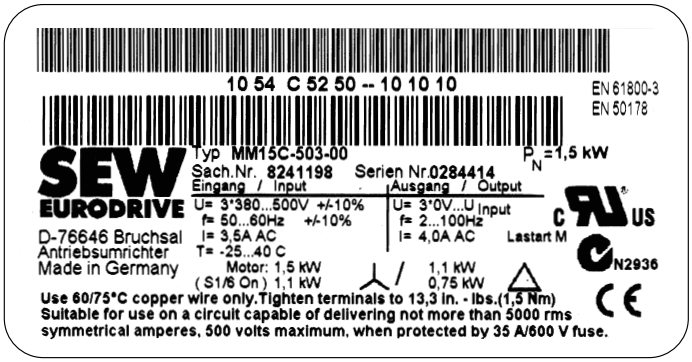

05605AXX

MM 15 C - 503 - 00

- Version (00 = Standard)
- Connection type (3 = 3-phase)
- Supply voltage (50 = AC 380...500 V)
- Version C
- Motor power (15 = 1.5 kW)
- MOVIMOT® series

Unit identification

The unit identification [1] on the top side of the MOVIMOT® inverter provides information about the inverter type [2], inverter part number [3], equipment power [4] and adapted (associated) motors [5].

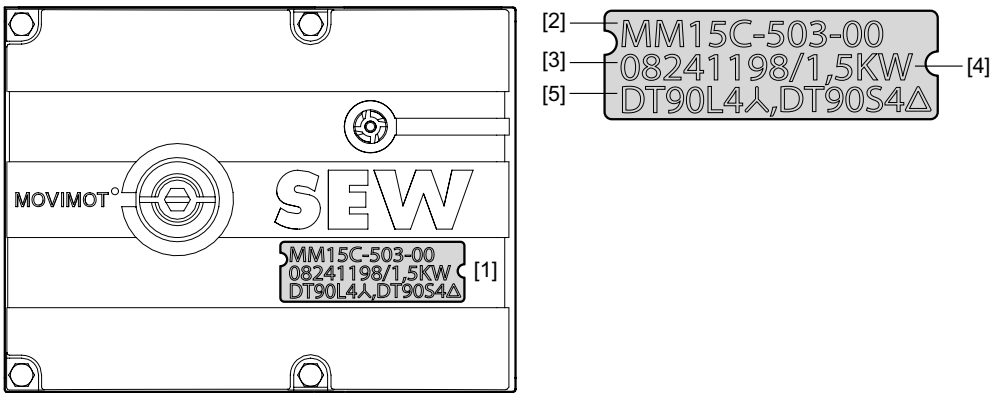

50862AXX

"Mounting close to the motor" version with option P2.A

The following illustration shows an example of the MOVIMOT® inverter mounted close to the motor with pertinent nameplate and unit designation:

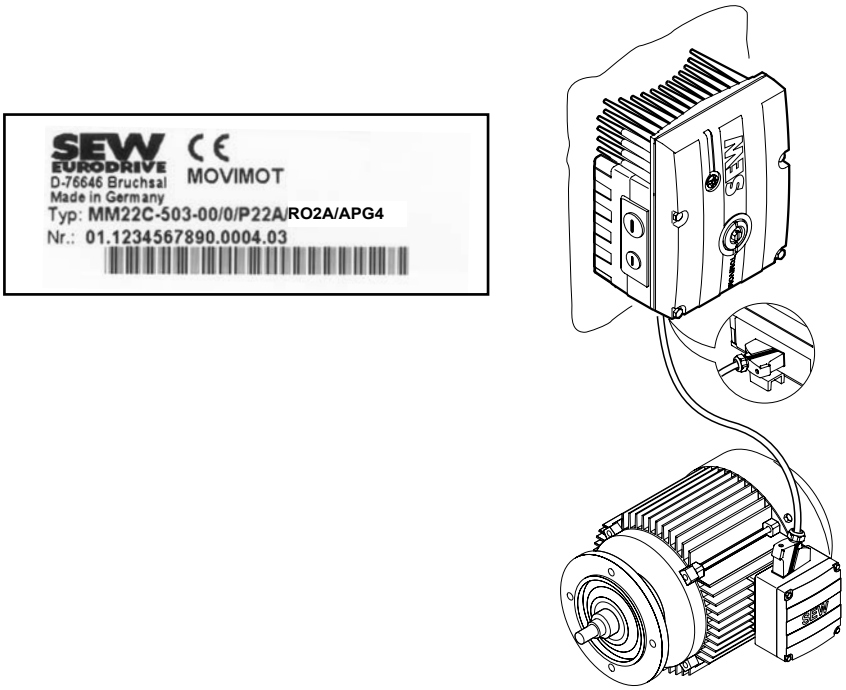

60053AXX

MM22C-503-00/0/P22A/RO2A/APG4

- Plug connector for the connection to the motor
- Terminal box version
- Adapter for mounting close to the motor
  21 = size 1
  22 = size 2
- Connection type
  0 = ⅄
  1 = △
- MOVIMOT®

4.3 MOVIMOT® inverter (with integrated AS-interface)

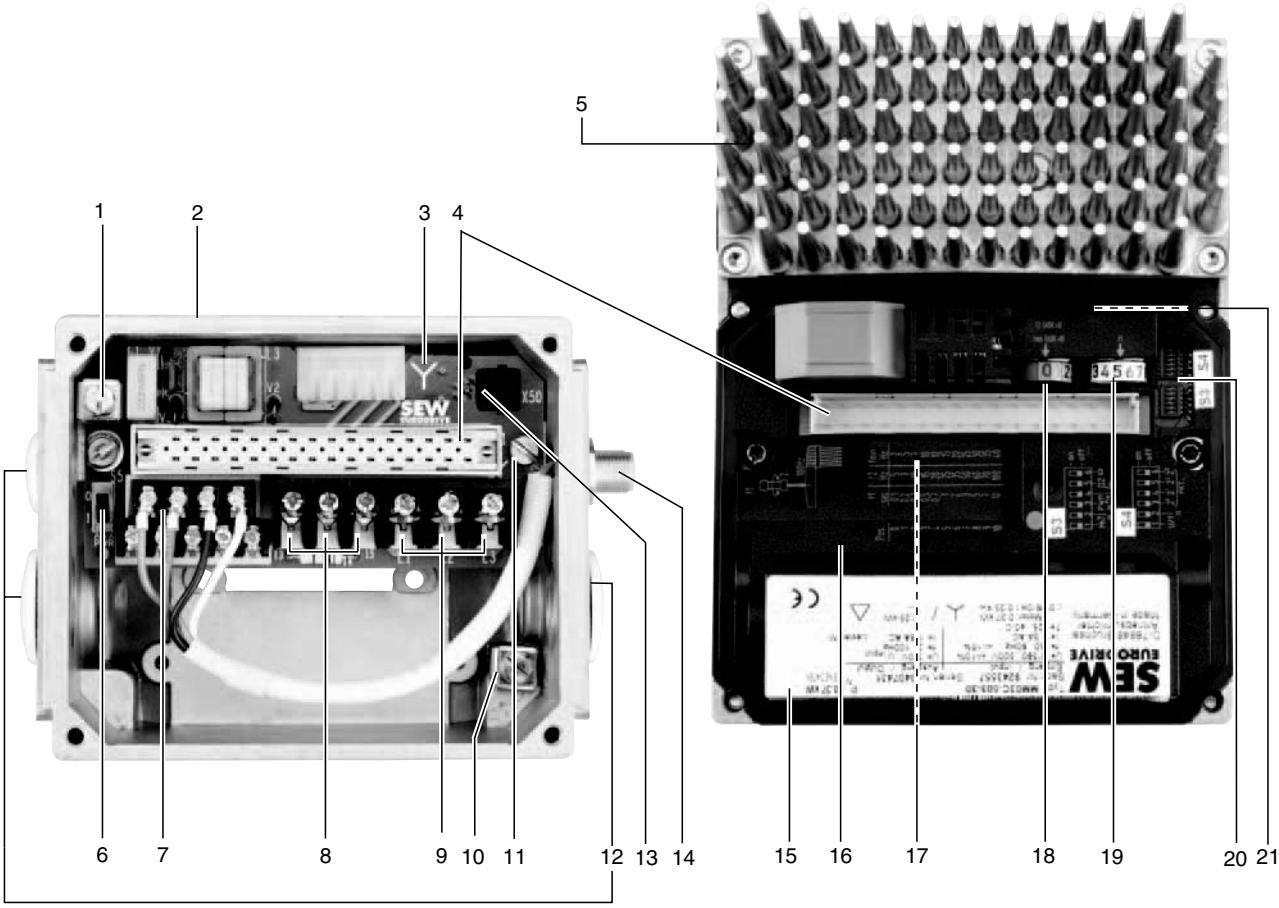

06413AXX

1. Screw for PE connection ×
2. Terminal box (size 1 used as example)
3. Identification of connection type
4. Connection plug between connection unit and inverter
5. MOVIMOT® inverter with heat sink (size 1 used as example)
6. Switch S5 (AUX/24 V supply), for settings, see "Startup" section.
7. Electronics terminal strip X2
8. Connection of brake coil (X3). For motors without brake: Connection of internal braking resistor BW. (standard)
9. Mains connection L1, L2, L3 (X3) (suitable for 2 x 4 mm^2)
10. Screw for PE connection ×
11. Connection unit with terminals
12. Cable glands
13. Diagnostic interface
14. AS-interface connection
15. Electronic nameplate
16. Protection cover for inverter electronics
17. Setpoint potentiometer f1 (not visible), access from the top of the MOVIMOT® inverter via a screw fitting.
18. Setpoint switch f2 (green)
19. Switch t1 for integrator ramp (white)
20. DIP switches S3 and S4 (for settings, see section "Startup")
21. Status LEDs (visible from the top of the MOVIMOT® inverter, see sec. "Operation")

4.4 Unit designations (MOVIMOT® with integrated AS-interface)

Sample motor nameplate

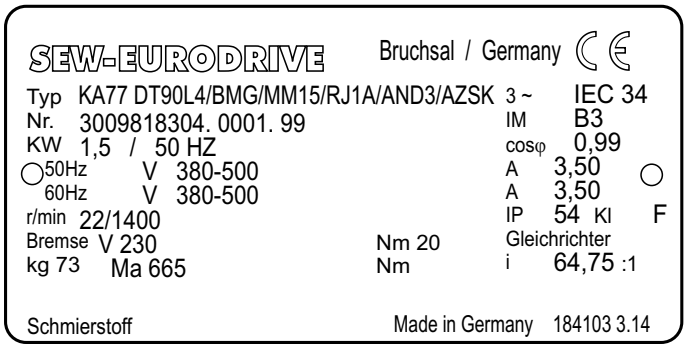

06488AXX

KA 77 DT 90L4 BMG/MM15/RJ1A/AND3/AZSK

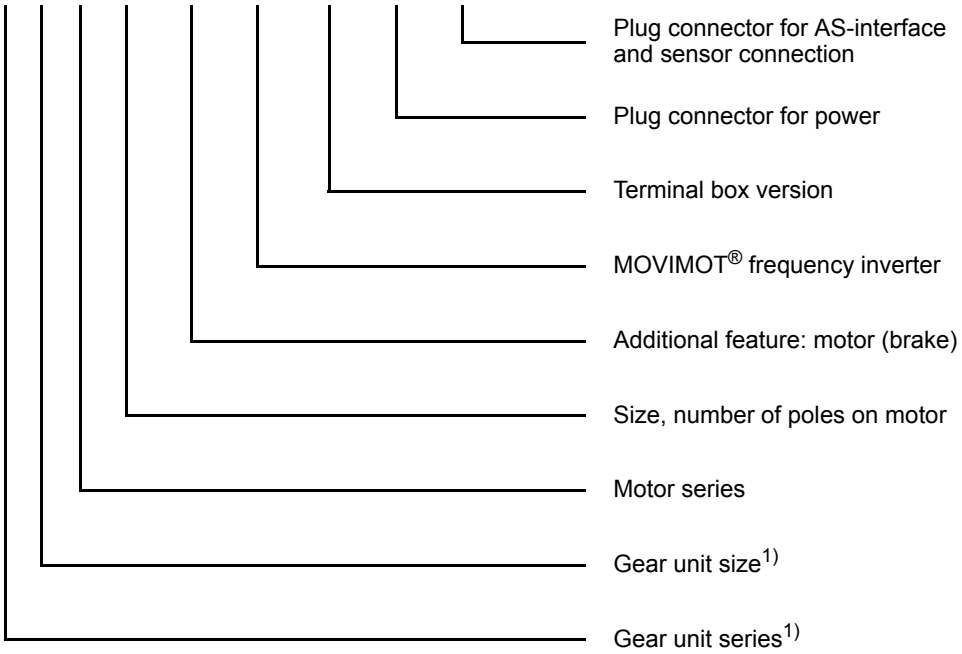

1) Detailed information about gearmotor combinations can be found in the "MOVIMOT® Gearmotors" catalog.

Sample inverter nameplate

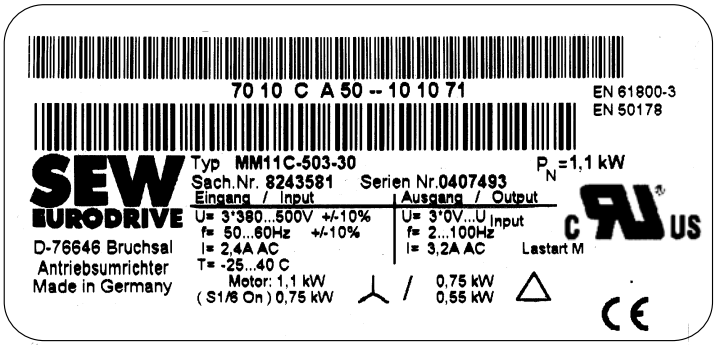

60056AXX

MM 15 C - 503 - 30

- Version (30 = with integrated AS-interface)
- Connection type (3 = 3-phase)
- Supply voltage (50 = AC 380...500 V)
- Version C
- Motor power (15 = 1.5 kW)
- MOVIMOT® series

Unit identification

The unit identification [1] on the top side of the MOVIMOT® inverter provides information about the inverter type [2], inverter part number [3], equipment power [4] and adapted (associated) motors [5].

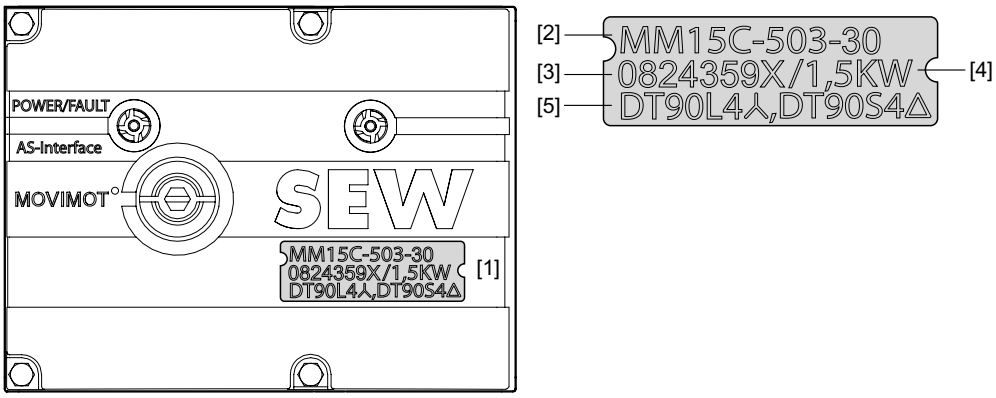

51967AXX

"Mounting close to the motor" version with option P2.A

The following illustration shows an example of the MOVIMOT® inverter mounted close to the motor with pertinent nameplate and unit designation:

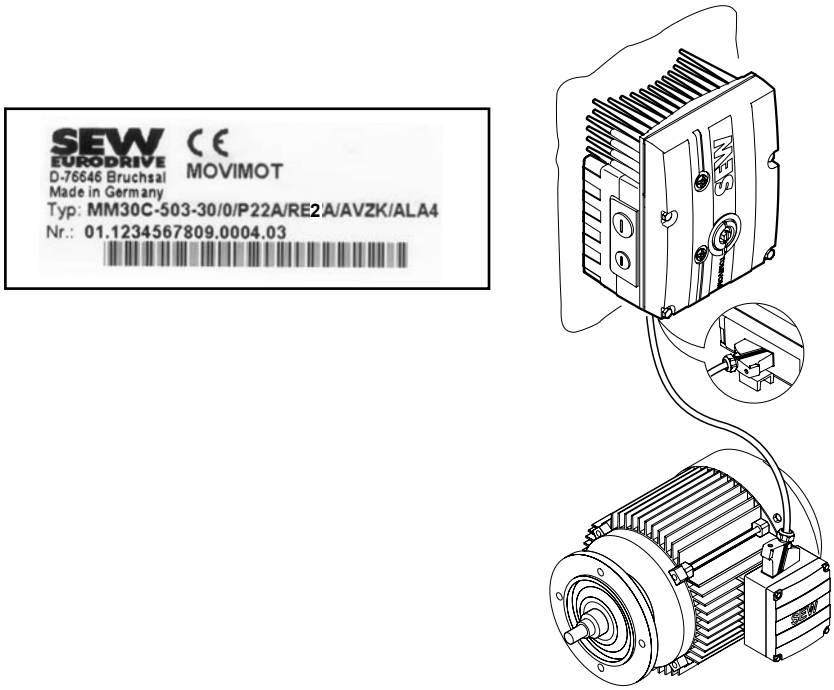

60058AXX

MM30C-503-30/0/P22A/RE2A/AVSK/ALA4

- Plug connector for the connection to the motor
- Plug connector option
- Terminal box version
- Adapter for mounting close to the motor
  21 = size 1
  22 = size 2
- Connection type
  0 = ⅄
  1 = △
- MOVIMOT®

5 Mechanical Installation

5.1 MOVIMOT® gearmotor

Before you begin

Install the MOVIMOT® unit only if:

- The entries on the nameplate of the drive match the voltage supply system
- The drive is undamaged (no damage caused during transportation or storage)
- It is certain that the following requirements have been met:
  - Ambient temperatures correspond to the information in the "Technical Data" section (remember that the temperature range of the gear unit may be restricted, see the operating instructions for the gear unit)
  - No oils, acids, gases, vapors, radiation, etc.

Installation tolerances

Shaft end	Flanges
Diameter tolerance in accordance with DIN 748 • ISO k6 at ∅ ≤ 50 mm • ISO m6 at ∅ > 50 mm (Center bore in accordance with DIN 332, shape DR)	Centering shoulder tolerance in accordance with DIN 42948 • ISO j6 at ∅ ≤ 230 mm • ISO h6 at ∅ > 230 mm

Installing MOVIMOT®

- The MOVIMOT® may only be mounted or installed in the specified mounting position on a level, shock-free and torsionally rigid support structure.
- Clean the shaft ends thoroughly to ensure they are free of anti-corrosion agents (use a commercially available solvent). Do not allow the solvent to penetrate the bearings and shaft seals – this could cause material damage.
- Carefully align the MOVIMOT® and the driven machine to avoid placing excessive strain on the motor shafts (observe permitted overhung loads and axial forces).
- Do not butt or hammer the shaft end.
- Use an appropriate cover to prevent foreign objects or fluids from entering motors in vertical mounting positions.
- Ensure that there is sufficient clearance around the unit to allow for adequate cooling. The unit must be positioned in such a way that it does not reuse the air warmed by other devices.
- Balance components for subsequent mounting on the shaft with a half key (output shafts are balanced with a half key).
- Any drain holes are closed with plastic plugs and must not be opened unless needed.
- Do not leave any drain holes open since this nullifies higher enclosure classes.

	STOP
STOP	The enclosure class specified in the technical data only applies when MOVIMOT® inverter is mounted correctly. The MOVIMOT® inverter may be damaged by moisture or dust when it is taken off of the terminal box. • Protect the MOVIMOT® inverter when it is taken off of the terminal box.

Installation in damp locations or outdoors

- Use suitable cable glands for the supply leads (use reducing adapters if necessary)
- Coat the threads of cable glands and filler plugs with sealant and tighten them well – then coat them again
- Seal the cable entry well
- Clean the sealing surfaces of the MOVIMOT® inverter well before reassembly
- Restore the anticorrosion coating if necessary
- Review enclosure class according to nameplate

5.2 Modular terminal box

Turning the terminal box

We generally recommend purchasing MOVIMOT® inverters with the correct position of cable entries pre-assembled at the factory. In exceptional cases, the position of the cable entries can later be turned to the opposite side (only on versions with modular terminal boxes).

	DANGER When working on the unit, dangerous voltage levels may still be present up to one minute after the mains is disconnected. Severe or fatal injuries from electric shock. • Turn off the MOVIMOT® inverter and wait at least 1 minute.

1. Before disconnecting the connections, label them for later re-installation.
2. Disconnect the mains, control and sensor connections.
3. Remove the screws [A] and remove the MOVIMOT® inverter [B].
4. Loosen screws [C] and remove terminal box [D].

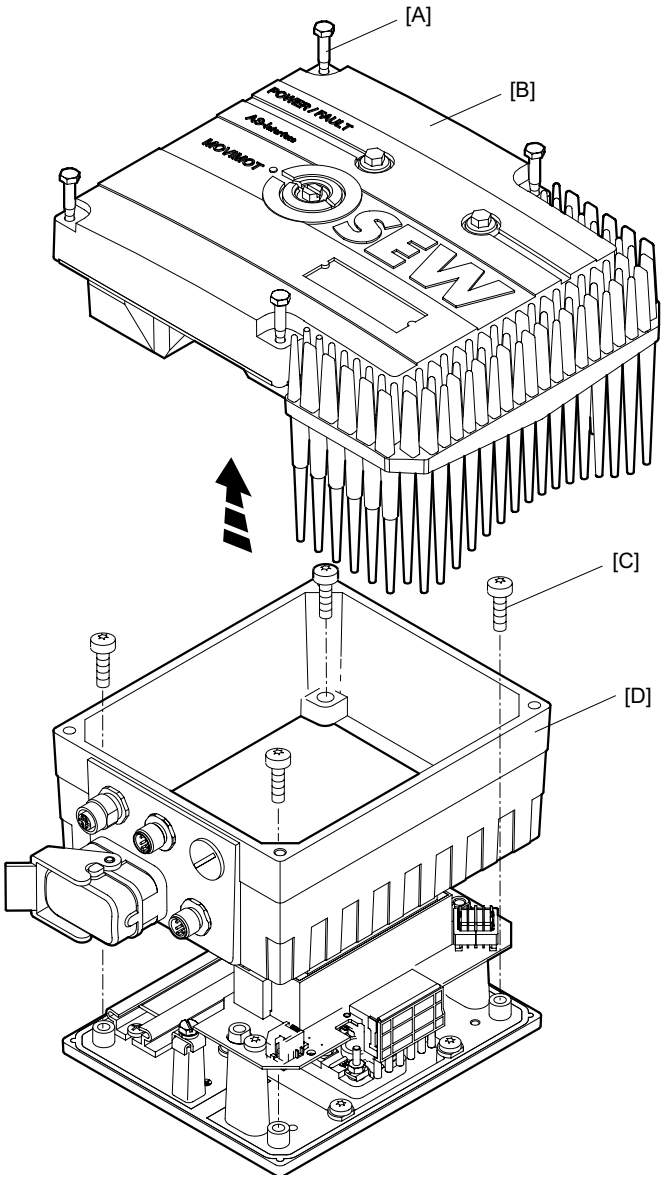

51819AXX

5. Turn terminal box [D] by 180°.

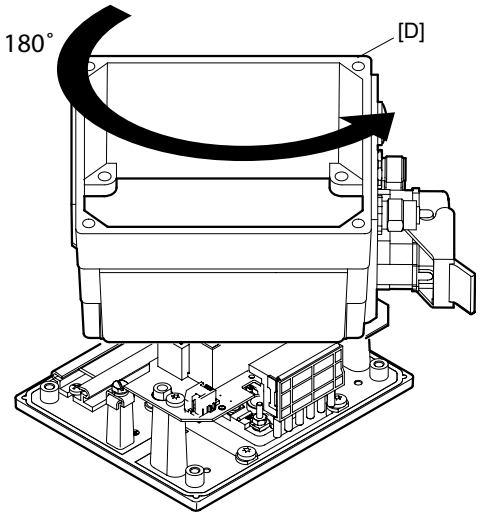

51820AXX

6. Place terminal box [D] on mounting plate [E] and mount it with screws [C].
7. Restore cabling.
8. Reattach the MOVIMOT® inverter [B] and secure with screws [A].

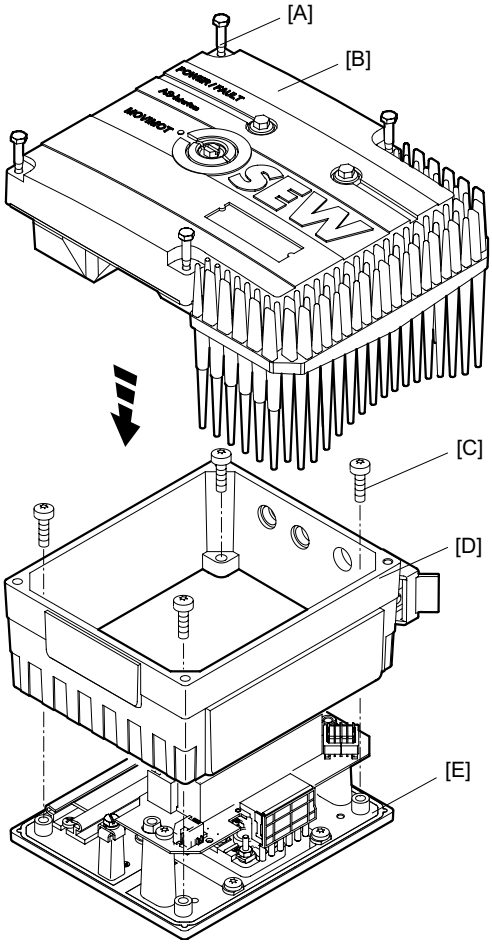

51821AXX

5.3 Mounting MOVIMOT® inverter close to the motor with option P2.A

The following illustration shows the mounting dimensions for mounting the MOVIMOT® inverter with option P2.A close to the motor:

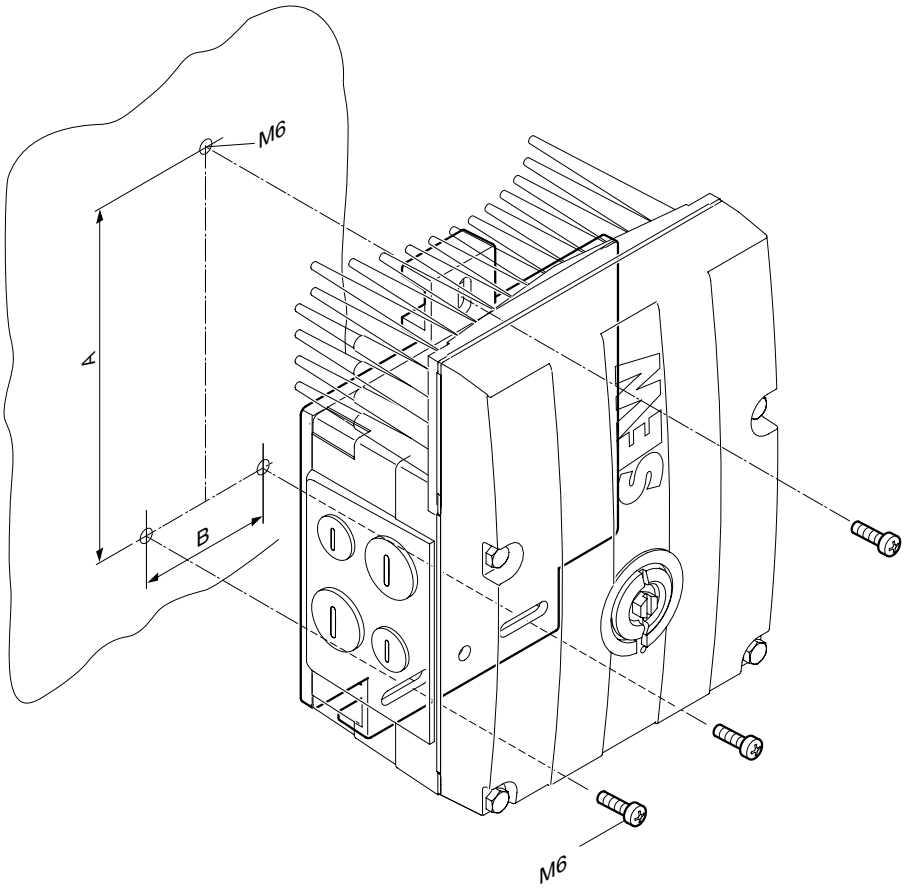

51772AXX

Size	A	B
MM03 to MM15	140 mm	65 mm
MM22 to MM3X	170 mm	65 mm

5.4 Option MLU11A / MLG..A / MLK11A

Scope of delivery

- MLU11A / MLG..A / MLK11A upper part [2]
- 2 screws [1]
- Cable entry screw [4]
- MLU11A / MLG..A / MLK11A lower part [5]

Installation

1. Remove one screw plug from the MOVIMOT® terminal box.
2. Secure the lower part [5] to the MOVIMOT® terminal box and mount it with a cable entry screw [4] (torque 2.5 Nm / 22 lb.in).
3. Guide the connection cable [3] through the cable entry screw [4] into the interior of the MOVIMOT® terminal box.
4. Place the upper part [2] onto the lower part [5] and mount with 2 screws [1] (torque 1.6 Nm / 14 lb.in).

STOP	**STOP** This option may only be mounted in the position which is shown in the following illustration.

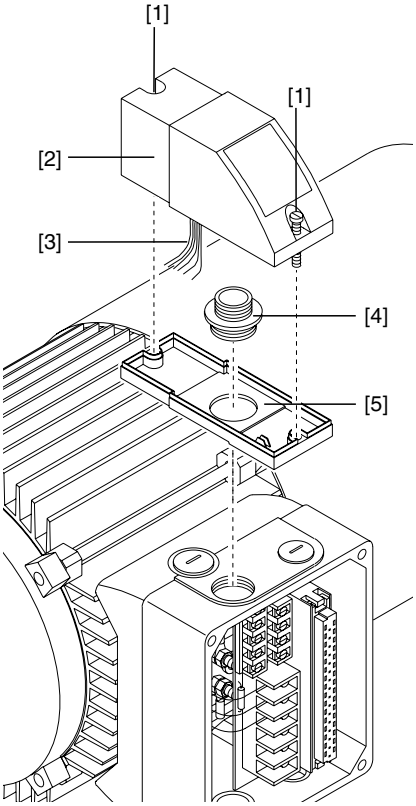

05625AXX

You will find information on connecting the MLU11A option on page 37.
You will find information on connecting the MLG11A option on page 38.
You will find information on connecting the MLK11A option on page 39.

5.5 MBG11A option

- A: Mounting from the rear using 4 tapped holes.
  (Tightening torque 1.6...2.0 Nm / 14...18 lb.in)
- B: Mounting from the front using 2 retaining holes
  (Tightening torque 1.6...2.0 Nm / 14...18 lb.in)

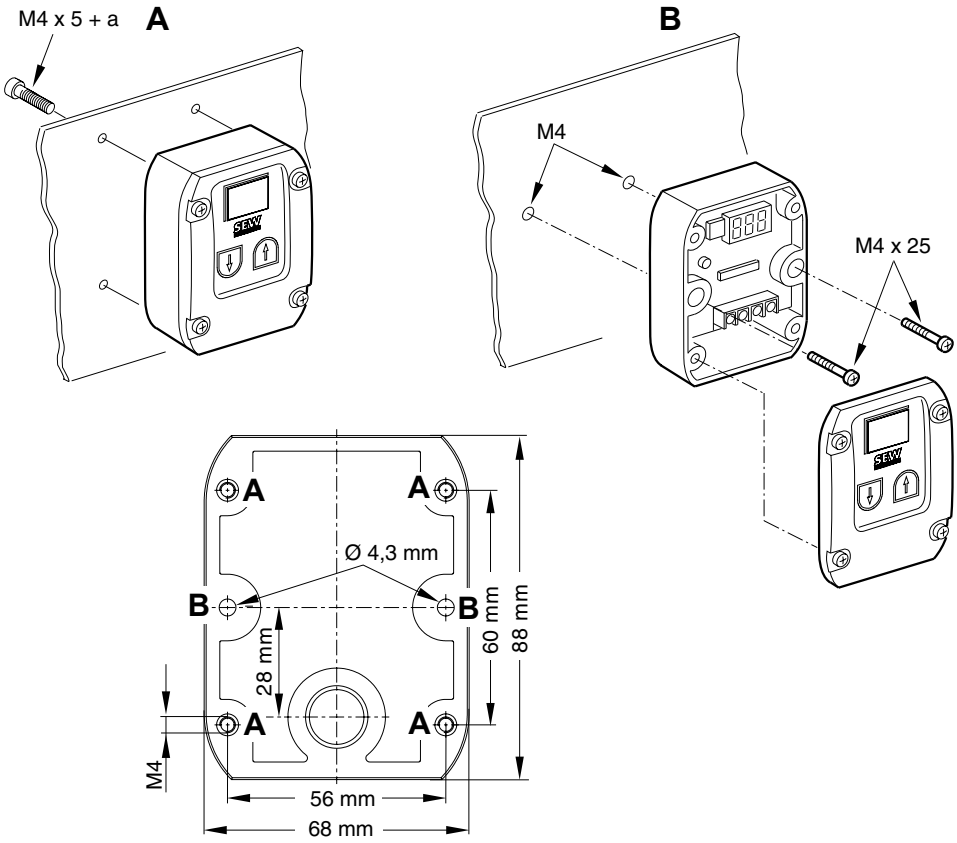

50912AXX

a = Wall thickness
Screws are not included in the scope of delivery.

You will find information on connecting the MBG11A option on page 39.

5.6 MWA21A option

- MWA21A is installed on support rail (EN 50022) in the control cabinet.

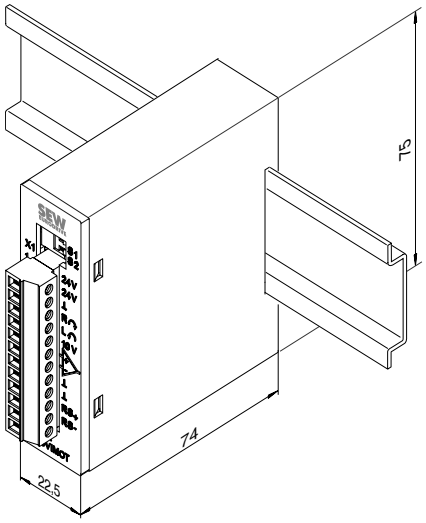

50519AXX

You will find information on connecting the MWA21A option on page 40.

5.7 URM option

The option is normally built into the modular terminal box at the factory. Please contact SEW-EURODRIVE service for questions regarding retrofitting the option.

STOP	**STOP** The installation of this option is only approved in combination with the modular terminal box. The following illustration shows a sample installation. The installation, in general, depends on the terminal box employed and, if applicable, the other options which are installed.

Mount the URM with two screws, as shown in the following illustration (tightening torque 2.0 Nm / 18 lb.in). Connection according to section "Electrical Installation".

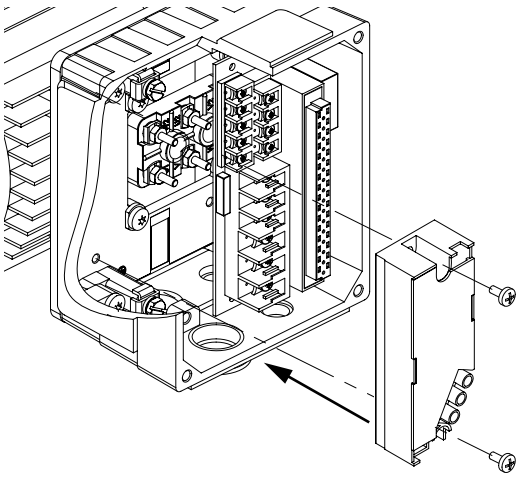

60049AXX

You will find information on connecting the URM option on page 41.

5.8 Option MNF11A

The option is normally built into the modular terminal box at the factory. Please contact SEW-EURODRIVE service for questions regarding retrofitting the option.

STOP	**STOP**
	The installation of this option is only approved in combination with the modular terminal box. The following illustration shows a sample assembly. The installation, in general, depends on the terminal box employed and, if applicable, the other options which are installed.

Mount the MNF11A with two screws and a retaining plate, as shown in the following illustration (tightening torque 2.0 Nm / 18 lb.in).

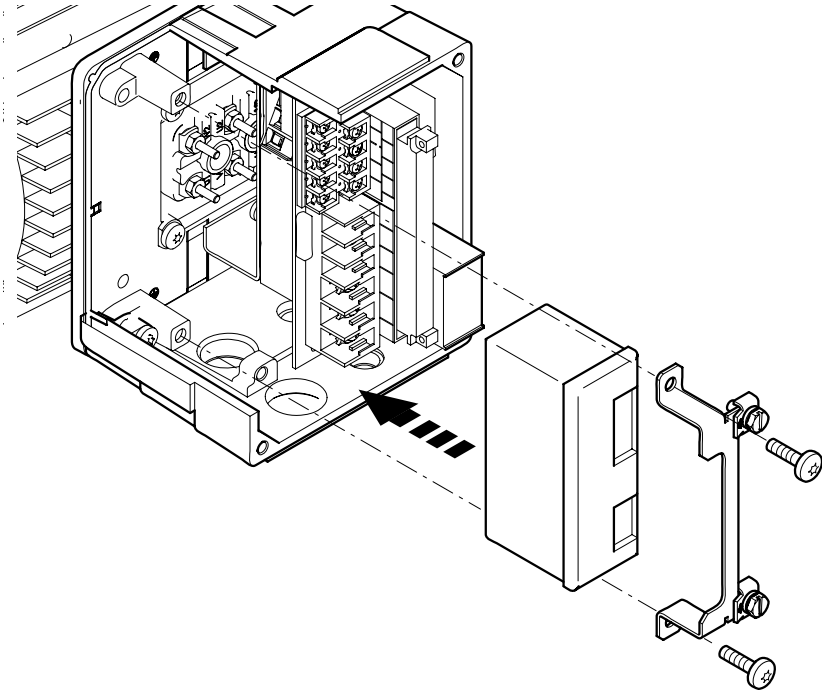

59794AXX

You will find information on connecting the MNF11A option on page 42.

5.9 Tightening torques

MOVIMOT® inverter

Tighten the screws for securing the MOVIMOT® inverter diagonally using 3.0 Nm (27 lb.in).

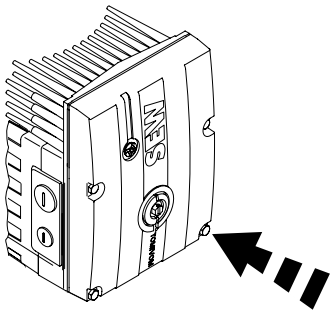

57919AXX

F1 potentiometer plug

Tighten F1 potentiometer screw plug with 2.5 Nm (22 lb.in).

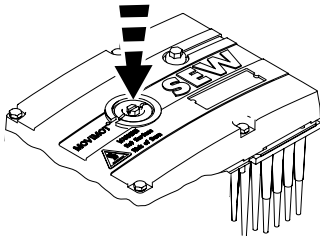

58105AXX

Cable glands

Always strictly observe the instructions of the manufacturer when installing cable glands.

Blanking plug cable entries

Tighten blanking plugs using 2.5 Nm (22 lb.in).

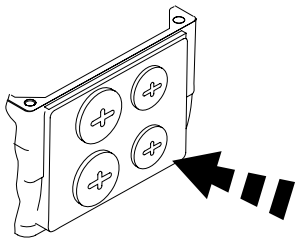

56660AXX

Modular terminal box

Tighten the screws to mount the terminal box on the mounting plate using 3.3 Nm (29 lb.in).

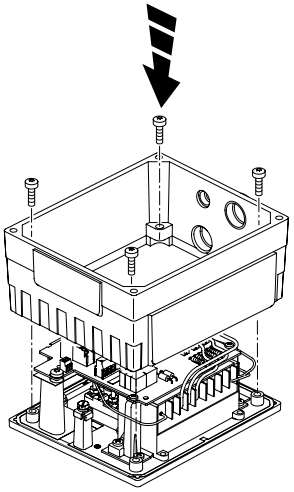

56683AXX

Tightening torques for terminals

Observe the following tightening torques for terminals during installation:

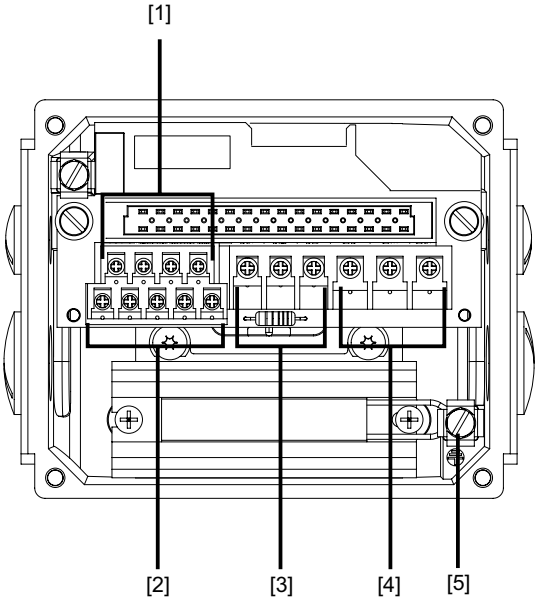

57826AXX

[1] 0.5 Nm to 0.7 Nm (4...6 lb.in)
[2] 0.5 Nm to 0.7 Nm (4...6 lb.in)
[3] 0.8 Nm to 1.1 Nm (7...10 lb.in)
[4] 1.2 Nm to 1.6 Nm (11...14 lb.in)
[5] 2.0 Nm to 2.4 Nm (18...21 lb.in)

6 Electrical Installation for MOVIMOT® Standard Version

6.1 Installation instructions

Connecting supply system leads

- The rated voltage and frequency of MOVIMOT® must correspond to the data for the supply system.
- Cable cross-section: according to input current I_{mains} for rated power (see Technical Data).
- Permitted cable cross section of MOVIMOT® terminals (does not apply to field distributors)

Power terminals	Control terminals
1.0 mm^2 – 4.0 mm^2 (2 x 4.0 mm^2)	0.25 mm^2 – 1.0 mm^2 (2 x 0.75 mm^2)
AWG17 – AWG10 (2 x AWG10)	AWG22 – AWG17 (2 x AWG18)

- Use conductor end sleeves without insulating shrouds (DIN 46228 part 1, material E-CU).
- Install line fuse at the beginning of the supply system lead behind the supply bus junction (see the section "Connection of MOVIMOT® basic unit", F11/F12/F13). Use D, D0, NH or power circuit breakers. Select the fuse size suitable to the cable cross-section.
- SEW recommends using earth-leakage monitors with pulse-code measuring processes for voltage supply systems with non-grounded star point (IT systems). Using such devices prevents the earth-leakage monitor mis-tripping due to the ground capacitance of the inverter.

Earth-leakage circuit breaker

- Do not use a conventional earth leakage circuit-breaker as a protection device. Universal current-sensitive earth leakage circuit-breakers (tripping current 300 mA) are permitted as a protection device. During normal operation of MOVIMOT®, earth-leakage currents of > 3.5 mA can occur.
- SEW-EURODRIVE recommends that you do not use earth-leakage circuit breakers. However, if an earth-leakage circuit breaker (FI) is stipulated for direct or indirect protection against contact, observe the **following note in accordance with EN 61800-5-1**:

WARNING

Incorrect earth-leakage circuit breaker installed.

Severe or fatal injuries.

MOVIMOT® can cause direct current in the protective earth. In cases where an earth-leakage circuit breaker (FI) is used for protection against direct or indirect contact, only a type B earth-leakage circuit breaker (FI) on the power supply side of the MOVIMOT® is permitted.

Mains contactor

- **Only use a contactor of utilization category AC3** (EN 60947-4-1) as a mains contactor.

NOTES

- Use the mains contactor K11 (see wiring diagram, page 35) only to switch the inverter on and off. Do not use it for jog mode. Use the "CW/stop" or "CCW/stop" commands for jog mode.
- Observe a minimum switch-off time of 2 s for the mains contactor K11.

Notes on the PE connection

DANGER

Faulty PE connection

Severe or fatal injuries or property damage from electric shock.

- The permitted tightening torque for the screw fitting is 2.0 to 2.4 Nm (18...21 lb.in).
- Observe the following notes regarding the PE connection.

Prohibited assembly	Recommendation: Assembly with forked cable lug Permitted for all cross sections	Assembly with thick connecting wire Permitted for cross sections up to 2.5 mm²
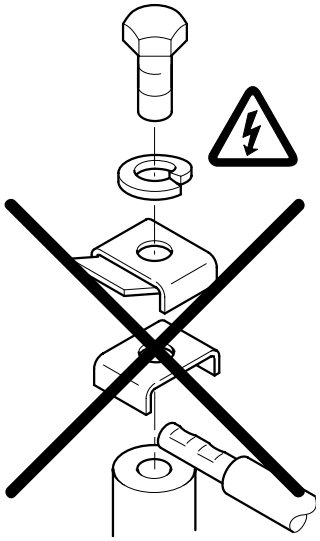 57461AXX	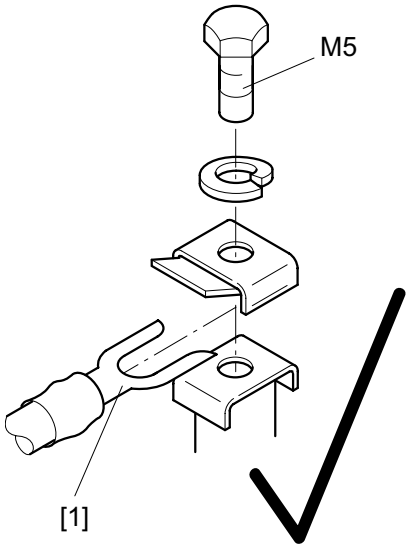 57463AXX	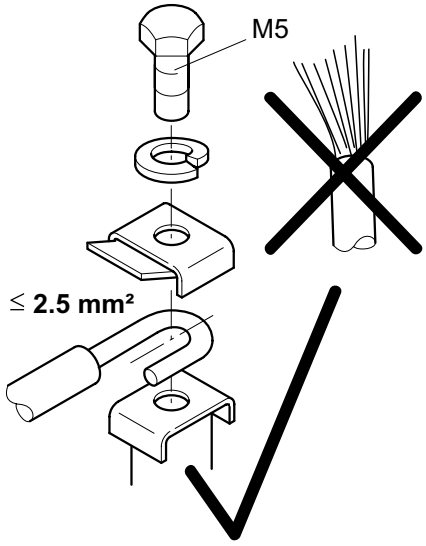 60800AXX

[1] Forked cable lug suitable for M5 PE screws

Earth-leakage currents ≥ 3.5 mA may occur during normal operation. To conform to EN 61800-5-1, observe the following:

- Route a second PE conductor with the cross section of the supply system lead in parallel to the protective earth via separate terminals or use a copper protective earth conductor with a cross section of 10 mm^2.

EMC-compliant installation

In compliance with the EMC legislation, frequency inverters cannot be operated on their own. Only if these components are integrated in a drive system can they be evaluated according to EMC guidelines. Their conformity is declared for a specified CE-typical drive system. Further information is found in these operating instructions.

	NOTES
	• This is a product with restricted availability in accordance with IEC 61800-3. It may cause EMC interference. In this case, the operator may need to implement appropriate measures. • For detailed information on EMC-compliant installation, refer to the publication "Electromagnetic Compatibility in Drive Engineering" from SEW-EURODRIVE.

Installation above 1000 meters above sea level (msl)

MOVIMOT® drives with supply voltages of 380 to 500 V can be used at altitudes from 1000 msl up to 4000 msl[1)] under the following peripheral conditions.

- The rated continuous power is reduced based on the reduced cooling above 1000 m (see the section "Technical Data Standard Version").
- Above 2000 msl, the air and creeping distances are only sufficient for overvoltage class 2. If the installation calls for overvoltage class 3, you will have to install additional external overvoltage protection to limit overvoltage peaks to 2.5 kV phase-to-phase and phase-to-ground.
- If safe electrical disconnection is required, it must be implemented outside the unit at altitudes of 2000 msl (safe electrical disconnection in accordance with EN 61800-5-1).
- The permitted rated supply voltage of 3 x 500 V up to 2000 msl is reduced by 6 V for every 100 m to a maximum of 3 x 380 V at 4000 msl.

Connecting DC 24 V supply

- Supply MOVIMOT® either via external DC 24 V or via the MLU..A or MLG..A options.

Conventional control (via binary commands)

- Connect the required control cables (e. g. CW/stop, CCW/stop, setpoint changeover f1/f2).
- Use shielded cables as control cables and route them separately from supply system leads.

Control via RS-485 interface

with bus master PLC, MLG..A, MBG11A, MWA21A option or MF../MQ.. field bus interfaces.

	NOTE
	Connect only one bus master.

- Use twisted pair shielded cables as control cables and route them separately from supply system leads.

1) The maximum altitude is limited by creeping distances and encapsulated components such as electrolytic capacitors.

Protective devices

- MOVI-SWITCH drives are equipped with integrated protective overload devices; external overload devices are not required.

UL-compliant installation

- Use only copper conductors with a temperature range 60/75 °C as connection cable.
- The permitted tightening torques for MOVIMOT® power terminals are: 1.5 Nm (13 lb.in).
- MOVIMOT® units are suited for operation on voltage supply systems with a grounded star point (TN and TT systems) supplying a maximum supply current of AC 5000 A and a maximum rated voltage of AC 500 V. To ensure UL-compliant installation, the performance data for fuses installed in MOVIMOT® units may not exceed 35 A/600 V.

	NOTES
	• Only use tested units with a limited output voltage (V_{max} = DC 30 V) and limited output current (I ≤ 8 A) as an external DC 24 V voltage source. • UL certification applies only to operation on voltage supply systems with voltages to ground up to 300 V. The UL approval is not valid for operation on voltage supply systems without a grounded star point (IT systems).

6.2 Connection of MOVIMOT® basic unit

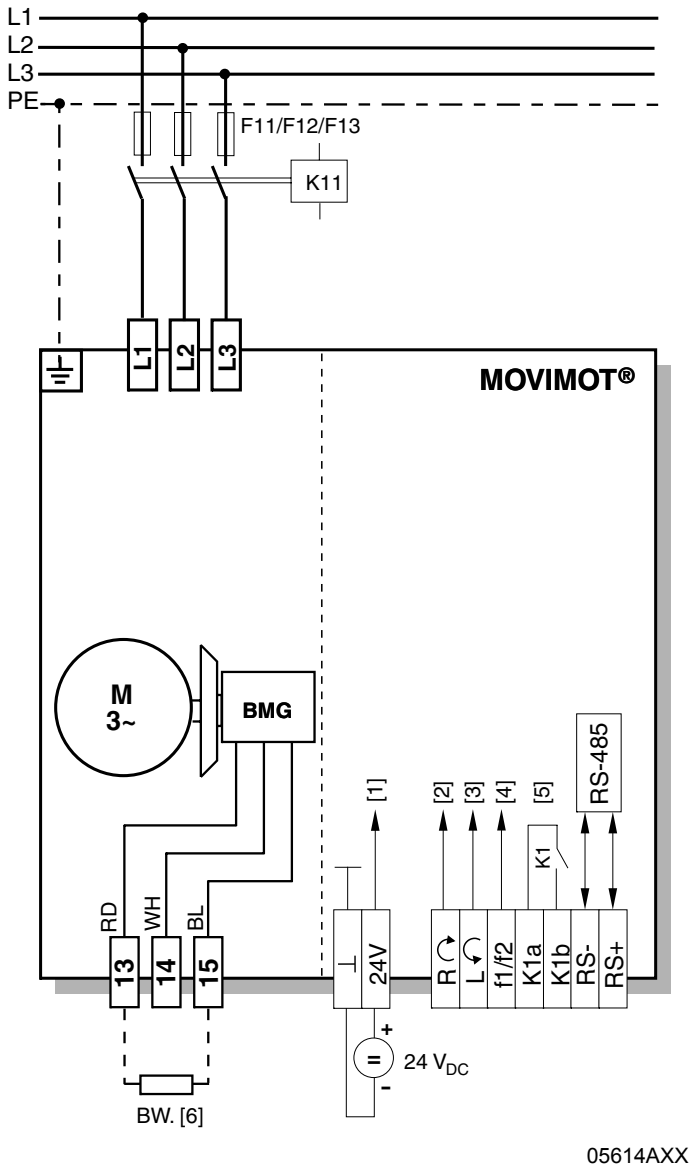

Functions of the CW/stop and CCW/stop terminals with binary control:

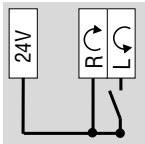

Direction of rotation **CW** active

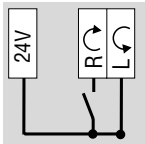

Direction of rotation **CCW** active

Functions of the f1/f2 terminals:

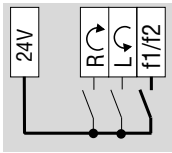

Setpoint **f1** active

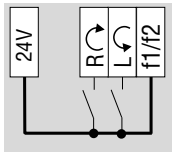

Setpoint **f2** active

Functions of the CW/stop and CCW/stop terminals with control via RS-485 interface/fieldbus:

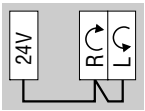

Both directions of rotation are enabled

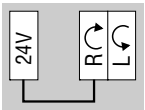

Only **CW** direction of rotation is enabled,
setpoint specifications for CCW operation result in standstill of drive

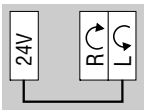

Only **CCW** direction of rotation is enabled,
setpoint specifications for CW operation result in standstill of drive

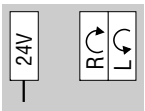

Drive is blocked or brought to a stop

[1] DC 24 V supply (external or MLU../MLG.. option)
[2] CW/stop
[3] CCW/stop
[4] Setpoint switch mode f1/f2
[5] Ready signal (contact closed = ready for operation)
[6] BW braking resistor (only in MOVIMOT® without mechanical brake)

6.3 MOVIMOT® plug connector

AVT1, ASA3 plug connectors

The following illustration shows the assignment of the optional AVT1 and ASA3 plug connectors.

Possible versions:

- MM.../ASA3
- MM.../AVT1
- MM.../ASA3/AVT1

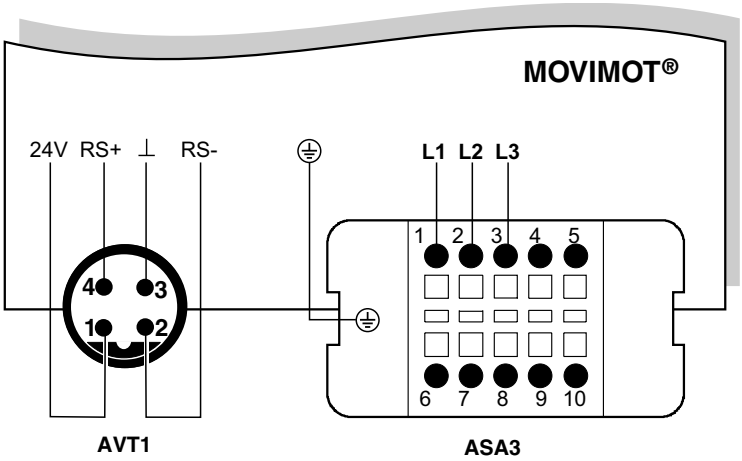

52113AXX

Plug connector AMA6

The following illustration shows the assignment of the optional AMA6 plug connector.

Possible version:

- MM.../AMA6

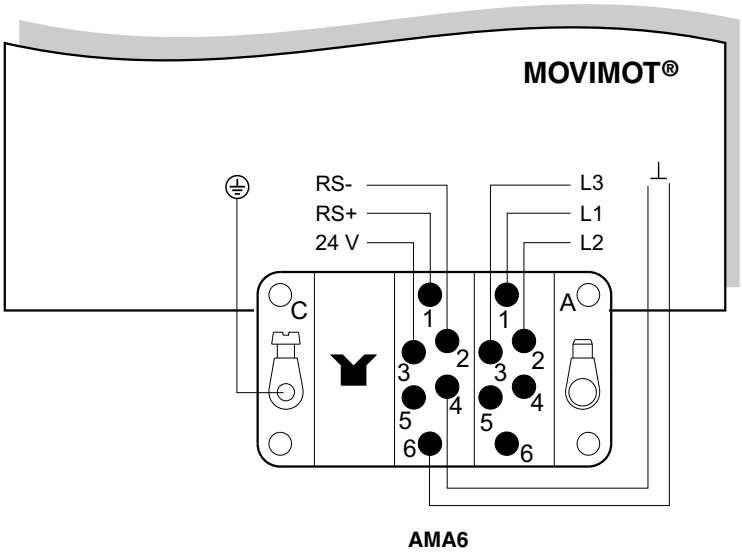

52114AXX

	NOTE
	For versions with plug connectors, both directions of rotation are enabled at the factory. If only one direction of rotation is needed, please observe the sections "Connection of MOVIMOT® basic unit, Functions of the CW/STOP, CCW/STOP terminals with control via RS-485 interface").

6.4 Connection MOVIMOT® options

MLU11A option connection

The following illustration shows the connection of the MLU11A option.

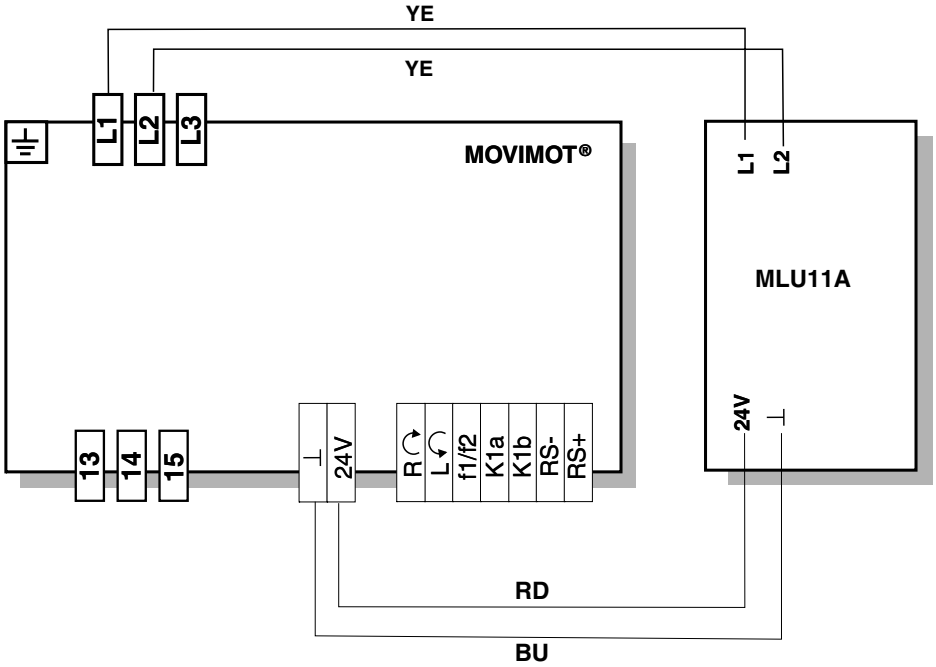

05651AXX

Connection MLU13A option

The following illustration shows the connection of the MLU13A option.

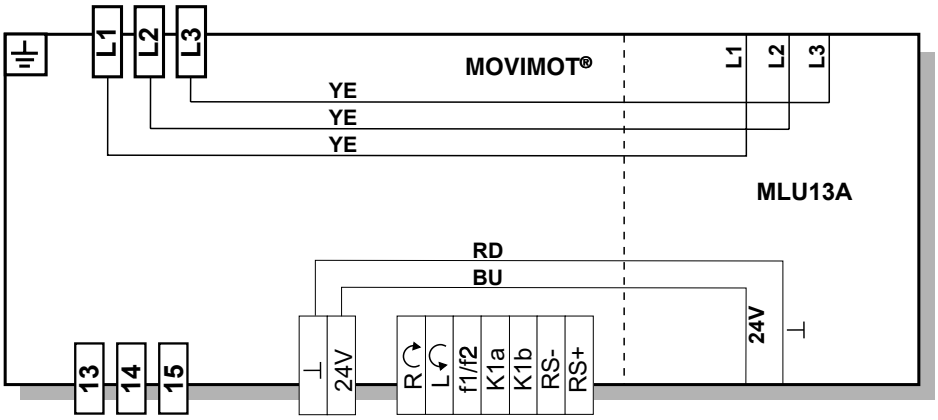

58632AXX

Connection MLG11A option

The following illustration shows the connection of the MLG11A option.

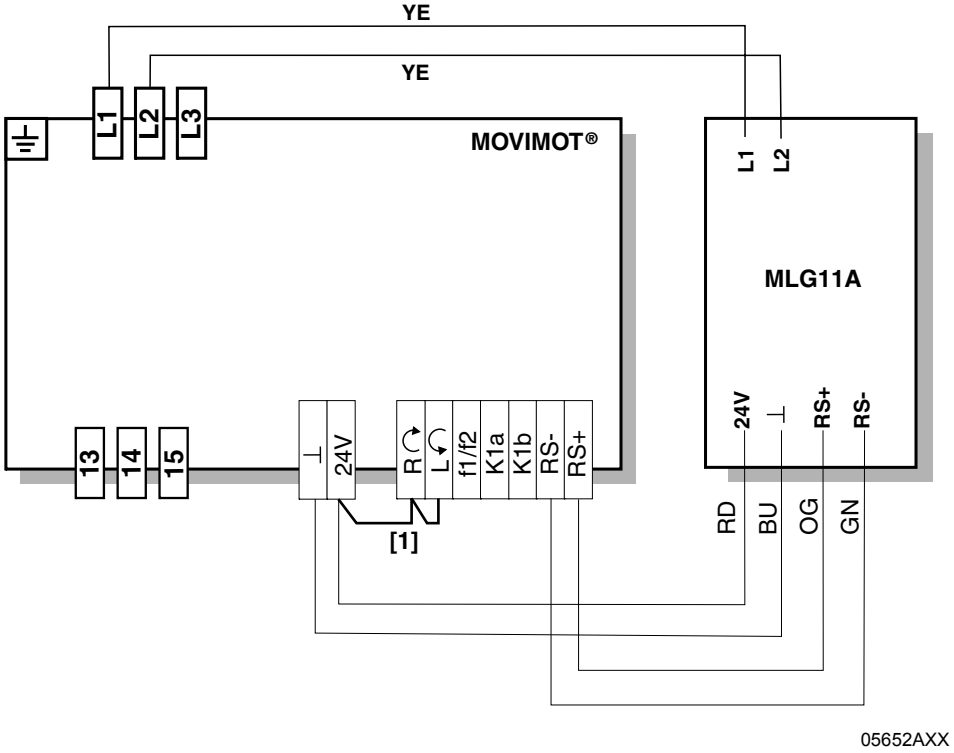

[1] Observe the enabled direction of rotation (see section "Connection of MOVIMOT® basic unit", Functions of the CW/stop and CCW/stop terminals with control via RS-485 interface)

Connection of MBG11A option

The following illustration shows the connection of the MBG11A option.

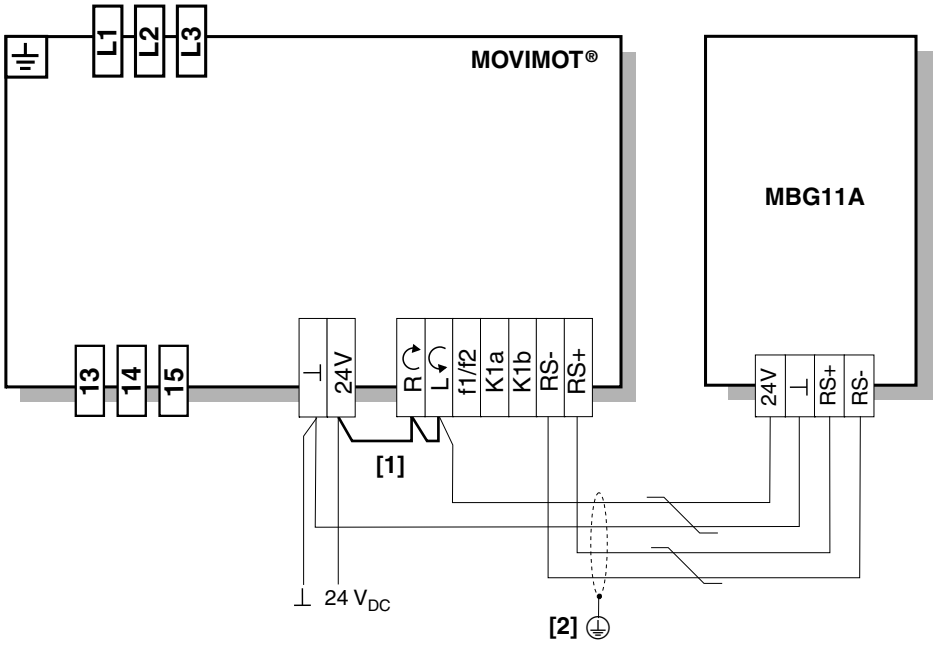

03183CXX

[1] Observe the enabled direction of rotation (see section "Connection of MOVIMOT® basic unit", Functions of the CW/stop and CCW/stop terminals with control via RS-485 interface)
[2] EMC metal cable gland

Connection MLK11A option

The following illustration shows the connection of the MLK11A option (external AS-interface binary slave).

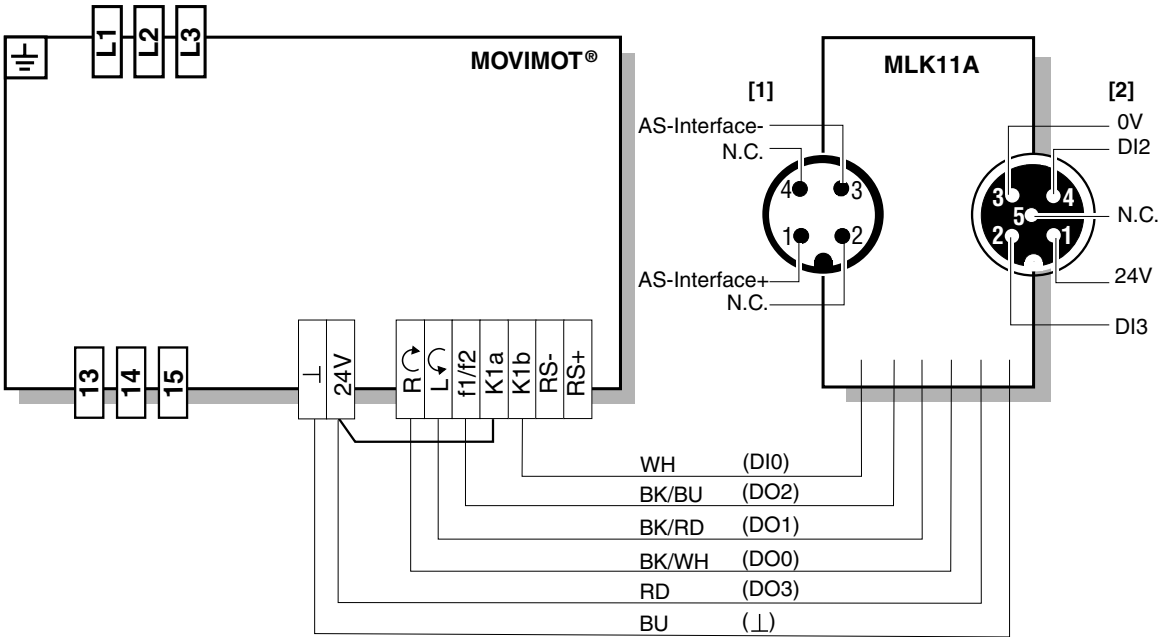

59027AXX

[1] AS-interface connection
[2] Connection for 2 external sensors

Connection of MWA21A option

The following illustration shows the connection of the MWA21A option.

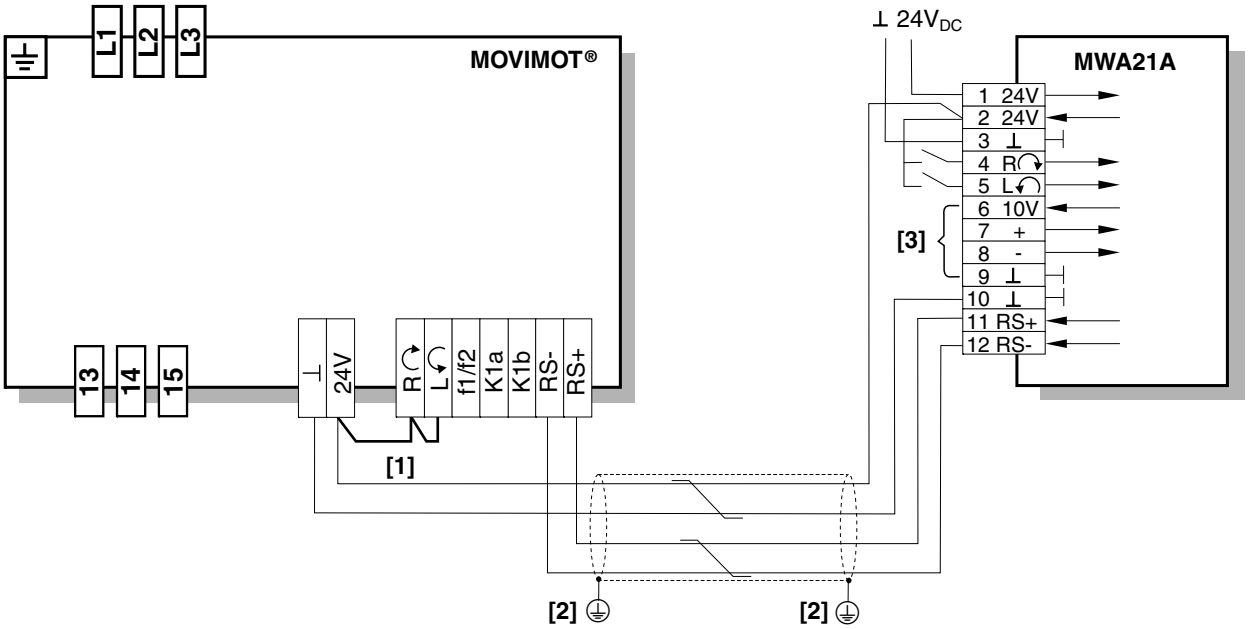

03184DXX

[1] Note the enabled direction of rotation
(see section "Connection of MOVIMOT® basic unit, Functions of the CW/stop, and CCW/stop terminals with control via RS-485 interface)
[2] EMC metal cable gland
[3] Potentiometer using the 10 V reference voltage **[A]**
or potential-free analog signal **[B]**

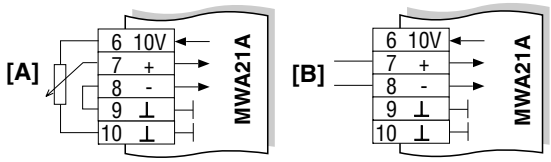

L05622BXX

Connection of URM option

The following illustration shows the connection of the URM option.

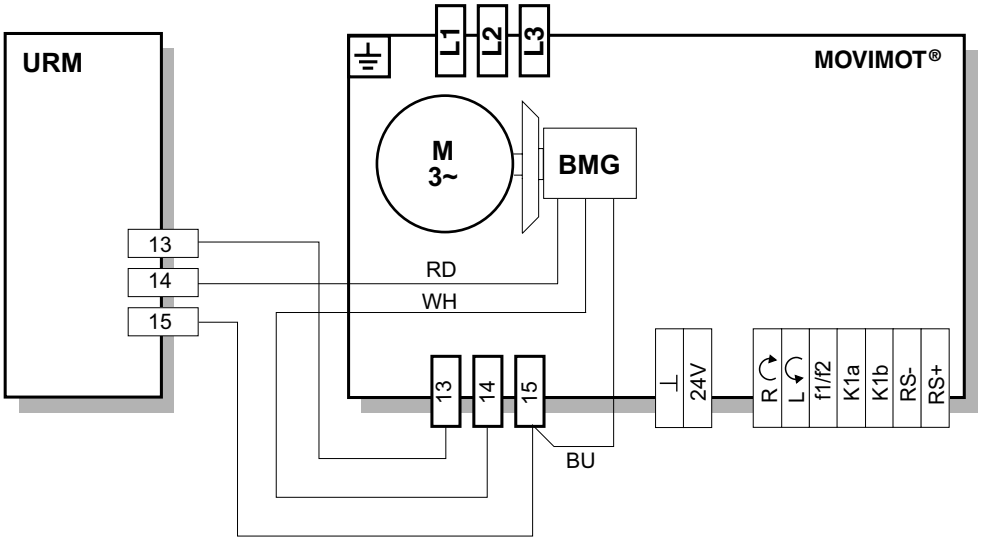

52203AXX

Connection of BGM option

The following illustration shows the connection of the BGM option.

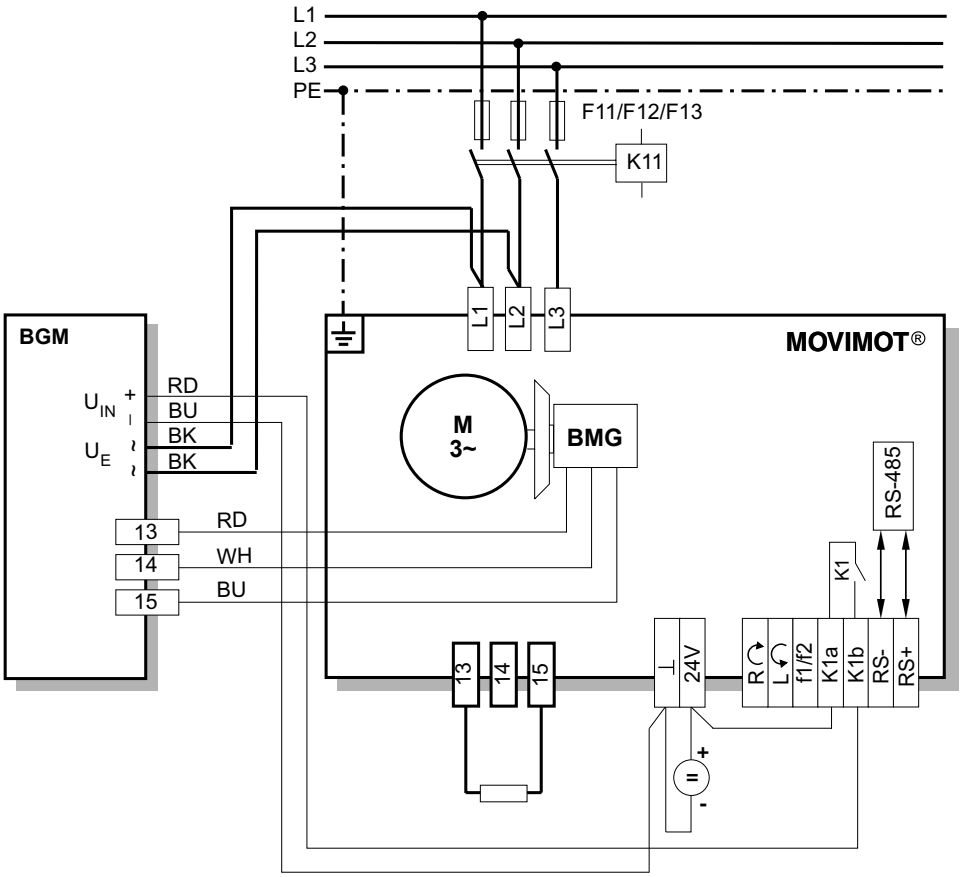

60310AXX

Connection of MNF11A option

The following illustration shows the connection of the MNF11A option.

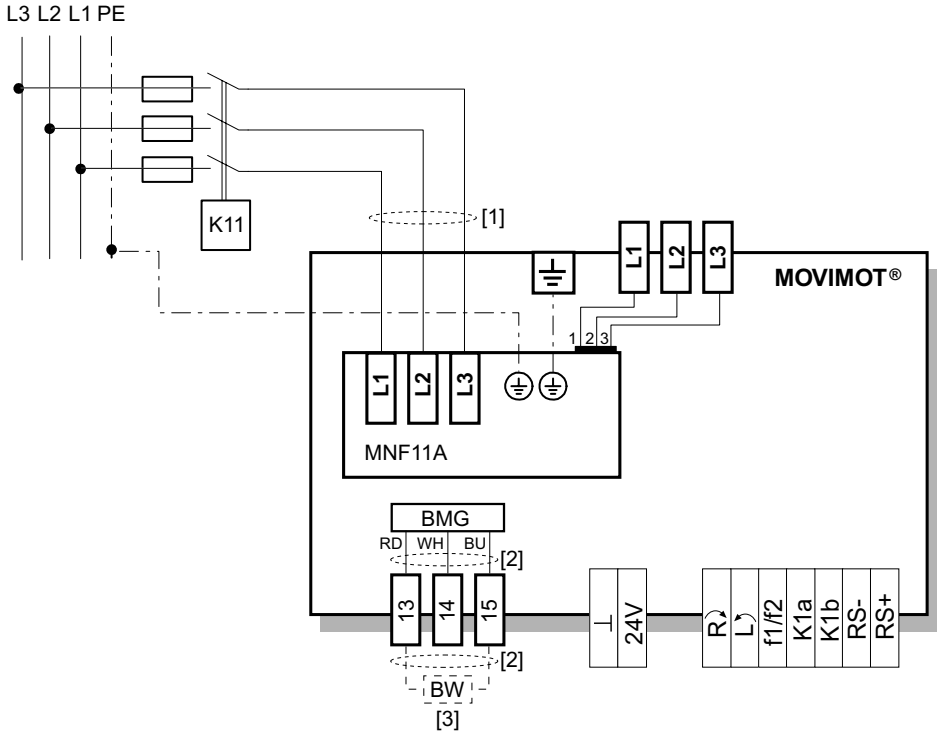

59080AXX

[1] Route the power supply cables so that the conductor lengths are as short as possible.
[2] Route the brake cables as short as possible. Route the brake cables as far as possible from the power supply cables, not parallel to them.
[3] Only for MOVIMOT® without mechanical brake.

Connection of MDG11A option

The following illustration shows the connection of the MDG11A option.

- The diagnostic unit must be connected prior to the possible occurrence of a fault, as MOVIMOT® error messages are not saved and the information is lost when the 24 V supply is disconnected.
- **Connecting the MDG11A to an RS-485 bus with several MOVIMOT® units is not permitted.**
- **The diagnostic unit can only be used if MOVIMOT® is controlled via terminals (= address 0 [S1/1-S1/4=OFF])**
- **Do not use the diagnostic unit when setpoint setting takes place via the RS-485 interface.**

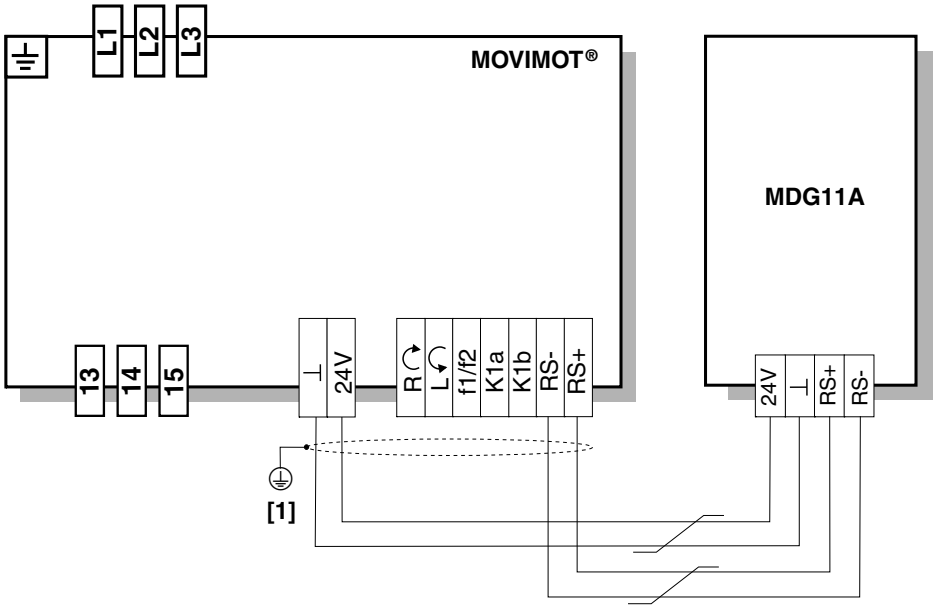

03404CXX

[1] EMC metal cable gland
For service, see section "Service"

6.5 Connection of RS-485 bus master

The following illustration shows the connection of an RS-485 bus master:

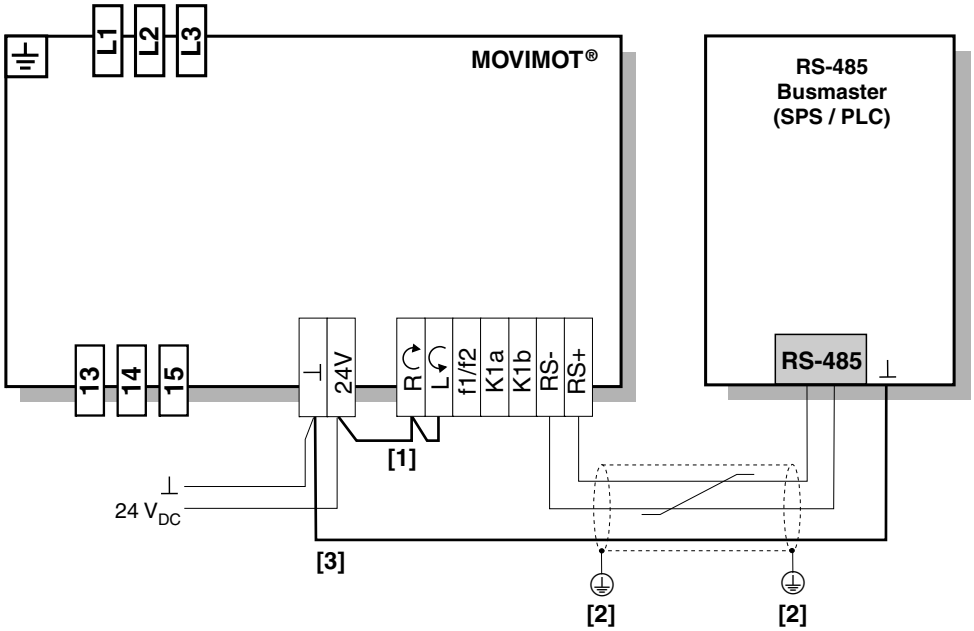

[1] Observe the enabled direction of rotation (see section "Connection of MOVIMOT® basic unit", Functions of the CW/stop and CCW/stop terminals with control via RS-485 interface)
[2] EMC metal cable gland
[3] Equipotential bonding MOVIMOT® / RS-485 master

6.6 Connection between MOVIMOT® and motor with mounting close to the motor

If the MOVIMOT® inverter with option P2.A is mounted close to the motor, the connection to the motor uses a pre-fabricated cable. The following versions are possible for MOVIMOT®:

- A: MM../P2.A/RO.A/**APG4**
- B: MM../P2.A/RE.A/**ALA4**

The APG 4 version results in the following connection options to the motor, dependent upon the hybrid cable used:

Version	A1	A2	A3	A4
MOVIMOT®	APG4	APG4	APG4	APG4
Motor	Cable gland/terminals	ASB4	APG4	IS
Hybrid cable	0 186 742 3	0 593 076 6	0 186 741 5	0 816 325 1 △ 0 816 326 X △ 0 593 278 5 ⅄ 0 593 755 8 ⅄
See also...	Page 47	Page 47	Page 47	Page 47

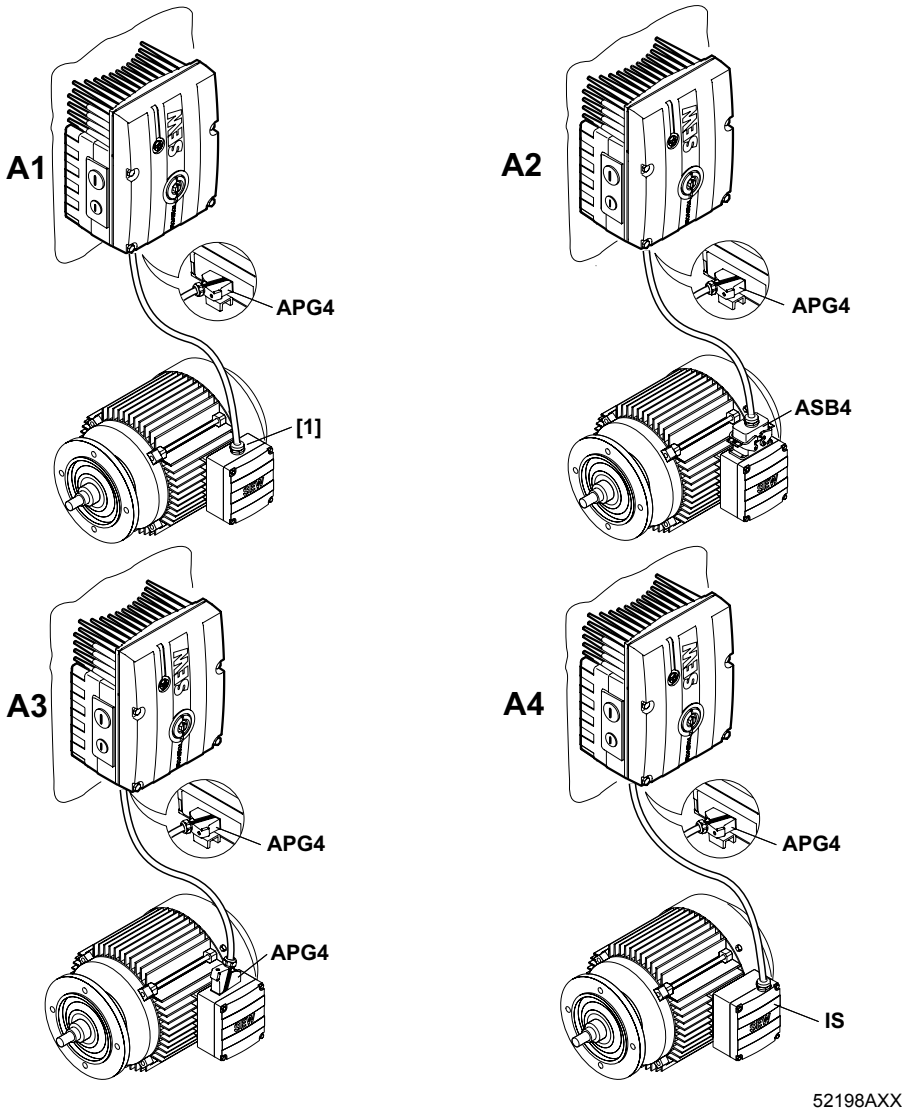

[1] Connection via terminals

The ALA 4 version results in the following connection options to the motor, dependent upon the hybrid cable used:

Version	B1	B2
MOVIMOT®	ALA4	ALA4
Motor	Cable gland/terminals	ASB4
Hybrid cable	0 817 948 4	0 816 208 5
Additional Information	Page 47	Page 47

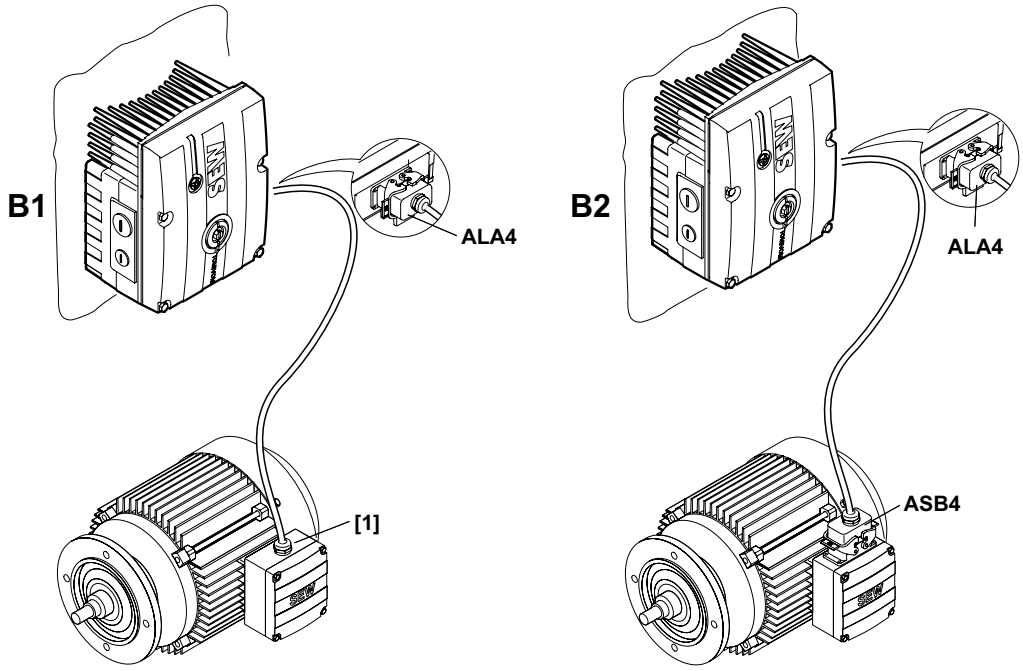

52199AXX

[1] Connection via terminals

Overview of connection between MOVIMOT® and motor when mounted in close proximity to the motor

MOVIMOT® inverter	Version	Hybrid cable	Drive
MM../P2.A/RO.A/APG4 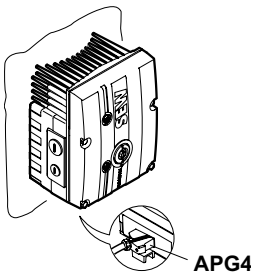	**A1**	Part number: 0 186 742 3 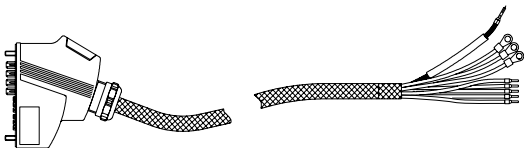	AC motors with cable gland 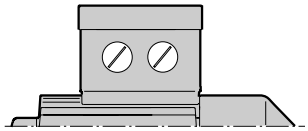
	A2	Part number: 0 593 076 6 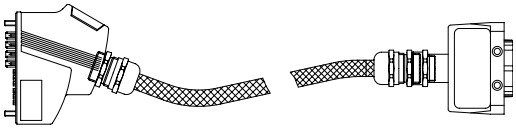	AC motors with ASB4 plug connector 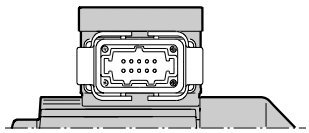
	A3	Part number: 0 186 741 5 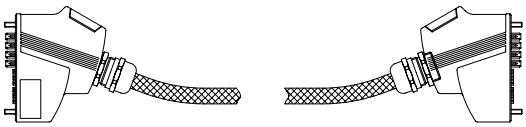	AC motors with APG4 plug connector 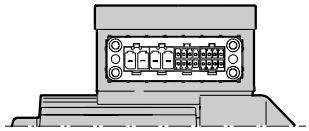
	A4	Part number: 0 593 278 5 (⅄) Part number: 0 816 325 1 (△) 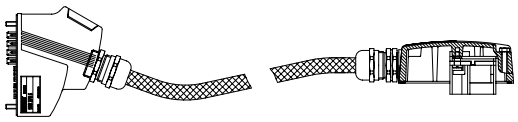	AC motors with IS plug connector, sizes DT71–DT90 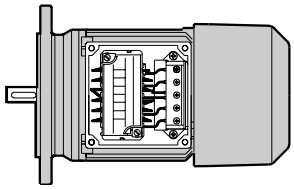
	A4	Part number: 0 593 755 8 (⅄) Part number: 0 816 326 X (△) 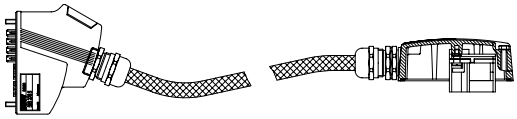	AC motors with IS plug connector, size DV100 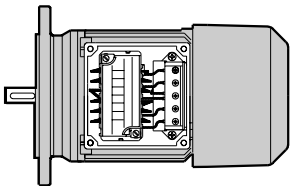
MM../P2.A/RE.A/ALA4 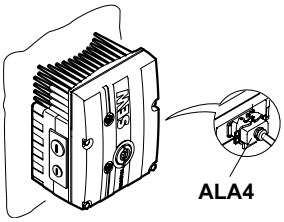	**B1**	Part number: 0 817 948 4 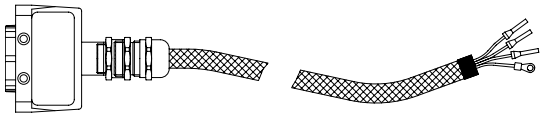	AC motors with cable gland 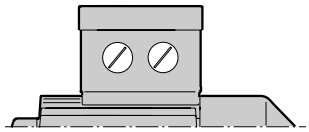
	B2	Part number: 0 816 208 5 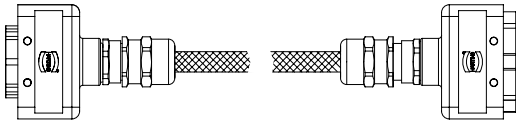	AC motors with ASB4 plug connector 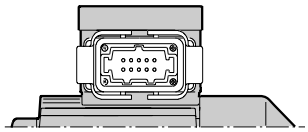

Cable/pin assignment

Cable assignment part numbers 0 186 742 3 and 0 817 948 4:

Cable assignment	
Motor terminal	**Core color/designation**
U1	Black/U1
V1	Black/V1
W1	Black/W1
4a	Red/13
3a	White/14
5a	Blue/15
1a	Black/1
2a	Black/2
PE terminal	Green-yellow + shield end (internal shield)

7 Electrical Installation of MOVIMOT® with Integrated AS-Interface

7.1 Installation instructions

Connecting supply system leads

- The rated voltage and frequency of MOVIMOT® must correspond to the data for the supply system.
- Cable cross-section: according to input current I_{mains} for rated power (see Technical Data).
- Permitted cable cross section of MOVIMOT® terminals (does not apply to field distributors)

Power terminals	Control terminals
1.0 mm^2 – 4.0 mm^2 (2 x 4.0 mm^2)	0.25 mm^2 – 1.0 mm^2 (2 x 0.75 mm^2)
AWG17 – AWG10 (2 x AWG10)	AWG22 – AWG17 (2 x AWG18)

- Use conductor end sleeves without insulating shrouds (DIN 46228 part 1, material E-CU).
- Install line fuse at the beginning of the supply system lead behind the supply bus junction (see the section "Connection of MOVIMOT® basic unit", F11/F12/F13). Use D, D0, NH or power circuit breakers. Select the fuse size suitable to the cable cross-section.
- SEW recommends using earth-leakage monitors with pulse-code measuring processes for voltage supply systems with non-grounded star point (IT systems). Using such devices prevents the earth-leakage monitor mis-tripping due to the ground capacitance of the inverter.

Earth-leakage circuit breaker

- Do not use a conventional earth leakage circuit-breaker as a protection device. Universal current-sensitive earth leakage circuit-breakers (tripping current 300 mA) are permitted as a protection device. During normal operation of MOVIMOT®, earth-leakage currents of > 3.5 mA can occur.
- SEW-EURODRIVE recommends that you do not use earth-leakage circuit breakers. However, if an earth-leakage circuit breaker (FI) is stipulated for direct or indirect protection against contact, observe the **following note in accordance with EN 61800-5-1**:

WARNING

Incorrect earth-leakage circuit breaker installed.

Severe or fatal injuries.

MOVIMOT® can cause direct current in the protective earth. In cases where an earth-leakage circuit breaker (FI) is used for protection against direct or indirect contact, only a type B earth-leakage circuit breaker (FI) on the power supply side of the MOVIMOT® is permitted.

Mains contactor

- **Only use a contactor of utilization category AC-3** (EN 60947-4-1) as a mains contactor

NOTES

- Use the mains contactor K11 (see wiring diagram, page 55) only to switch the inverter on and off. Do not use it for jog mode. Use the "CW/stop" or "CCW/stop" commands for jog mode.
- Observe a minimum switch-off time of 2 s for the mains contactor K11.

Notes on PE connection

DANGER

Faulty PE connection

Severe or fatal injuries or property damage from electric shock.

- The permitted tightening torque for the screw fitting is 2.0 to 2.4 Nm (18...21 lb.in).
- Observe the following notes regarding the PE connection.

Prohibited assembly	Recommendation: Assembly with forked cable lug Permitted for all cross sections	Assembly with thick connecting wire Permitted for cross sections up to 2.5 mm²
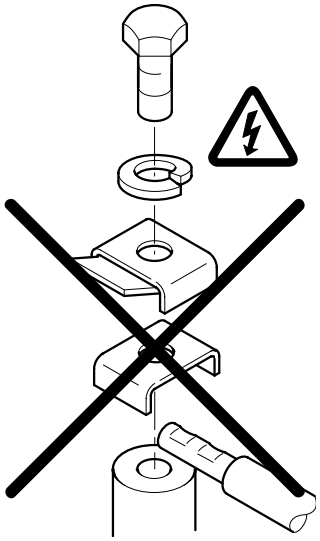 57461AXX	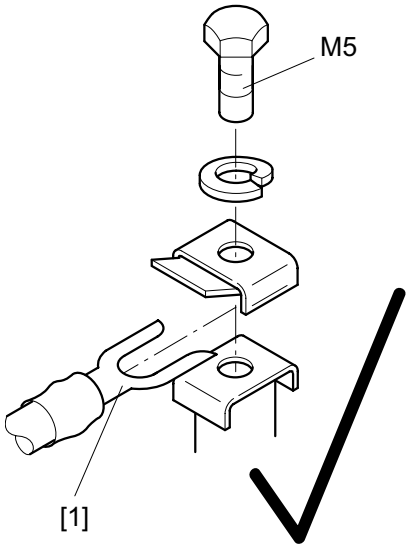 57463AXX	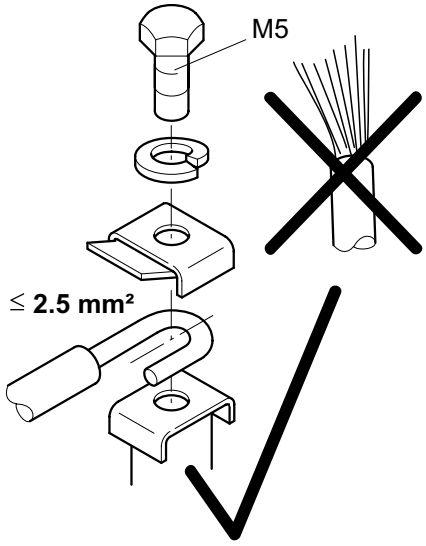 60800AXX

[1] Forked cable lug suitable for M5 PE screws

Earth-leakage currents ≥ 3.5 mA may occur during normal operation. To conform to EN 61800-5-1, observe the following:

- Route a second PE conductor with the cross section of the supply system lead in parallel to the protective earth via separate terminals or use a copper protective earth conductor with a cross section of 10 mm^2.

EMC-compliant installation

In compliance with the EMC legislation, frequency inverters cannot be operated on their own. Only if these components are integrated into a drive system can they be rated according to EMC guidelines. Their conformity is declared for a specified CE-typical drive system. Further information is found in these operating instructions.

NOTES

- This is a product with restricted availability in accordance with IEC 61800-3. It may cause EMC interference. In this case, the operator may need to implement appropriate measures.
- For detailed information on EMC-compliant installation, refer to the publication "Electromagnetic Compatibility in Drive Engineering" from SEW-EURODRIVE.

Installation at 1000 meters above sea level (msl) or higher

MOVIMOT® drives with supply voltages of 380 to 500 V can be used at altitudes from 1000 msl up to 4000 msl[1)] under the following peripheral conditions.

- The rated continuous power is reduced owing to the reduced cooling above 1000 m (see the section "Technical Data").
- Above 2000 msl, the air and creeping distances are only sufficient for overvoltage class 2. If the installation requires overvoltage class 3, you will have to install additional external overvoltage protection in order to limit overvoltage peaks to 2.5 kV phase-to-phase and phase-to-ground.
- If safe electrical disconnection is required, it must be implemented outside the unit ataltitudes above 2000 msl (safe electrical disconnection in accordance with EN 50178).
- The permitted rated supply voltage of 3 x 500 V up to 2000 msl is reduced by 6 V for every 100 m to a maximum of 3 x 380 V at 4000 msl.

Protection devices

- MOVIMOT® drives are equipped with integrated protective overload devices; external overload devices are not required.

UL-compliant installation

- Use only copper conductors with a temperature range 60/75 °C as connection cable.
- The permitted tightening torques for MOVIMOT® power terminals are: 1.5 Nm (13 lb.in).
- MOVIMOT® units are suited for operation on voltage supply systems with a grounded star point (TN and TT systems) supplying a maximum supply current of AC 5000 A and a maximum rated voltage of AC 500 V. To ensure UL-compliant installation, the performance data for fuses installed in MOVIMOT® units may not exceed 35 A/600 V.

NOTES

- Only use tested units with a limited output voltage (V_{max} = DC 30 V) and limited output current ($I \leq 8$ A) as an external DC 24 V voltage source.
- UL certification applies only to operation on voltage supply systems with voltages to ground up to 300 V. The UL approval is not valid for operation on voltage supply systems without a grounded star point (IT systems).

1) The maximum altitude is limited by creeping distances and encapsulated components such as electrolytic capacitors.

7.2 Connection options with integrated AS-interface

Power supply and control

A Version with plug connector AVSK (1 x M12 plug):

Version **Unit designation**	**A1** **MM../AVSK**	**A2** **MM../AVSK**
Switch S5	0	1
24 V supply	Yellow AS-interface cable	Black AUX-PWR cable (double pick-off)
AS-interface connection	Yellow AS-interface cable	Yellow AS-interface cable (double pick-off)
Mains connection	Terminals	Terminals
Sensor connection	Terminals	Terminals
Additional Information	Page 55	Page 55

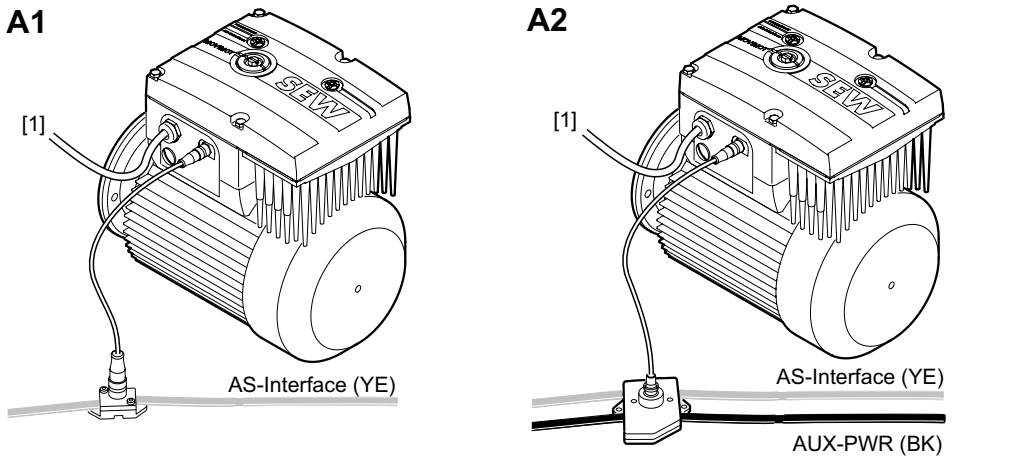

[1] Mains

	NOTE The versions shown above are also valid for mounting the MOVIMOT® inverter with option P2.A close to the motor.

B Version with plug connector AZSK (3 x M12 plug):

Version Unit designation	B1 MM../RC.A/AZSK	B2 MM../RC.A/AZSK	B3 MM../RC.A/AZSK
Switch S5	1	1	0
24 V supply	Black AUX-PWR cable	Black AUX-PWR cable (double pick-off)	Yellow AS-interface cable
AS-interface connection	Yellow AS-interface cable	Yellow AS-interface cable (double pick-off)	Yellow AS-interface cable
Mains connection	Terminals	Terminals	Terminals
Sensor connection	M12 plug connector	M12 plug connector	M12 plug connector
Additional Information	Page 56	Page 56	Page 56

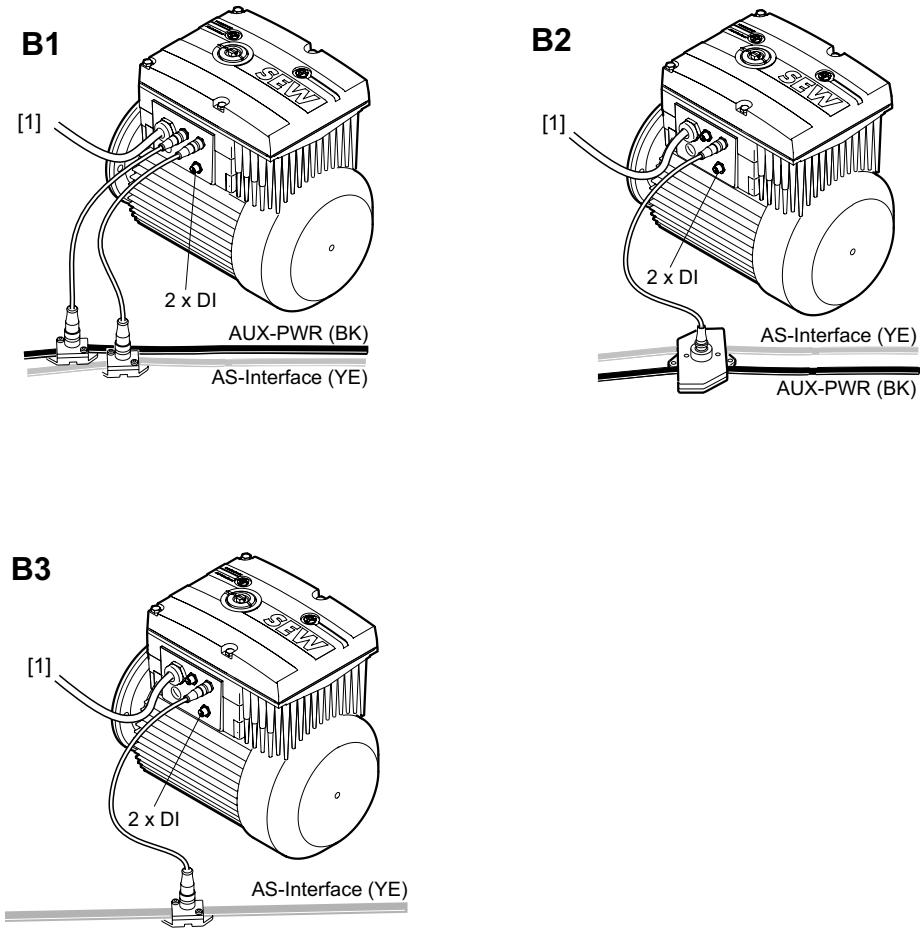

59029AXX

[1] Mains

	NOTE
	The versions shown above are also valid for mounting the MOVIMOT® inverter with option P2.A close to the motor.

C Version with plug connector AND3/AZSK (3 x M12 plug, 1 x Han Q8/0):

Version Unit designation	C1 MM../RJ.A/AND3/AZSK	C2 MM../RJ.A/AND3/AZSK	C3 MM../RJ.A/AND3/AZSK
Switch S5	1	1	0
24 V supply	AUX-PWR cable	AUX-PWR cable (double pick-off)	Yellow AS-interface cable
AS-interface connection	Yellow AS-interface cable	Yellow AS-interface cable (double pick-off)	Yellow AS-interface cable
Mains connection	AND3 plug connector	AND3 plug connector	AND3 plug connector
Sensor connection	M12 plug connector	M12 plug connector	M12 plug connector
Additional Information	Page 57	Page 57	Page 57

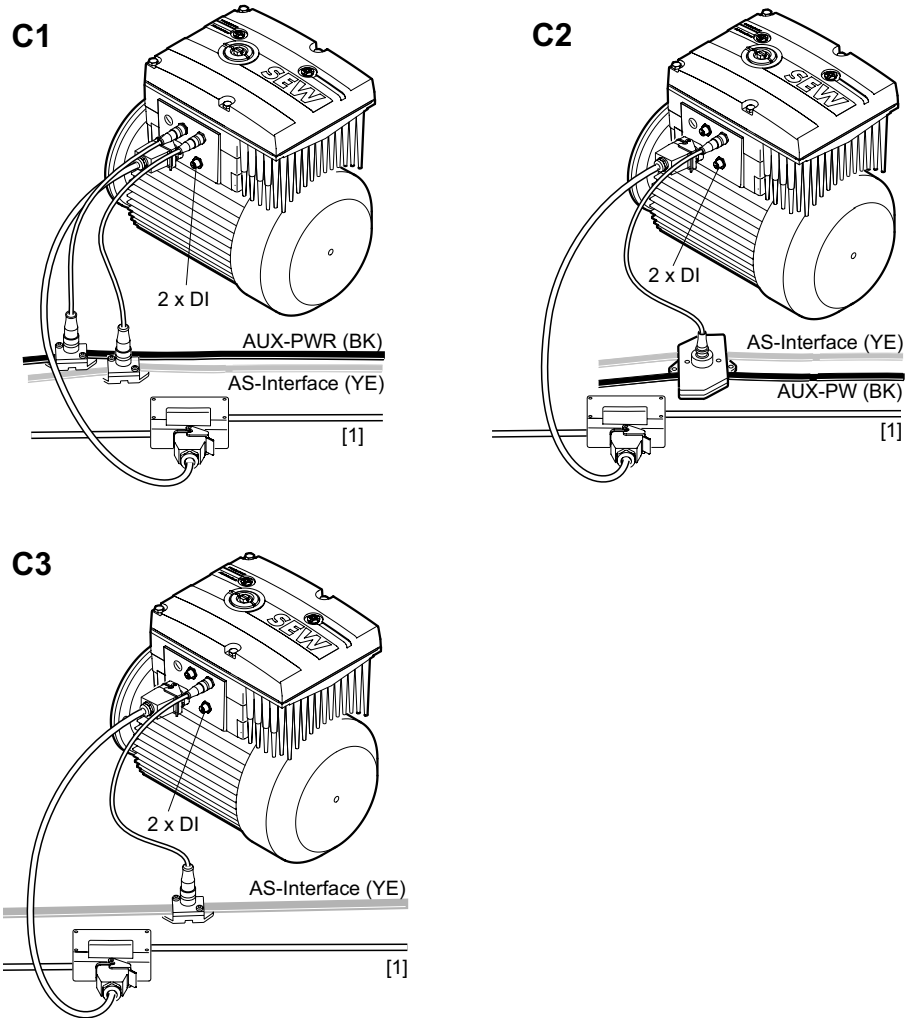

[1] Mains

	NOTE
	The versions shown above are also valid for mounting the MOVIMOT® inverter with option P2.A close to the motor.

7.3 Connection of MOVIMOT® MM../AVSK (connection option A)

The following illustration shows the connection in version MM../AVSK:

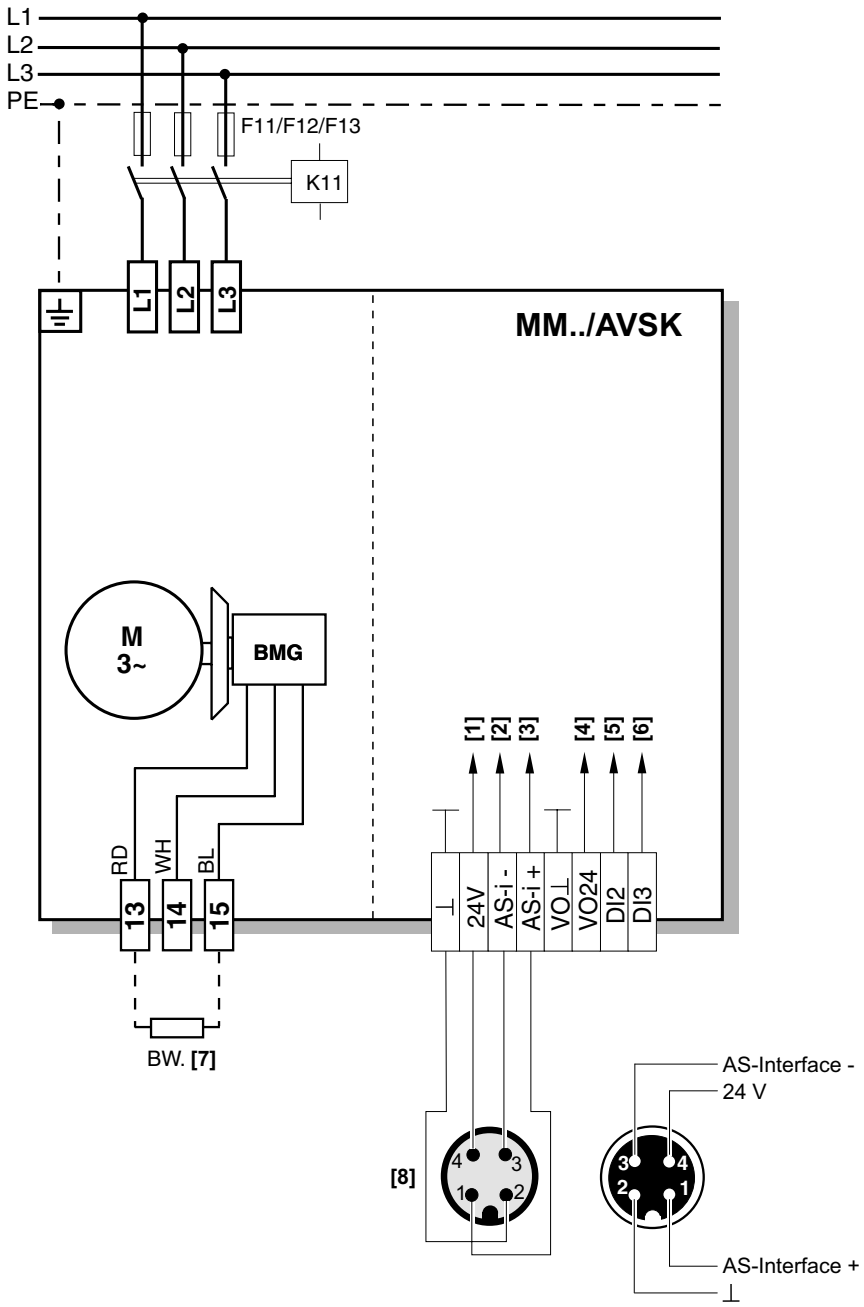

[1] DC 24 V supply
[2] AS-interface data line –
[3] AS-interface data line +
[4] Voltage supply for sensors
[5] DI2 sensor
[6] DI3 sensor
[7] Braking resistor BW.. (only for MOVIMOT® without mechanical brake)
[8] M12 plug (yellow)

7.4 Connection of MOVIMOT® MM../AZSK (connection option B)

The following illustration shows the connection in version MM../AZSK:

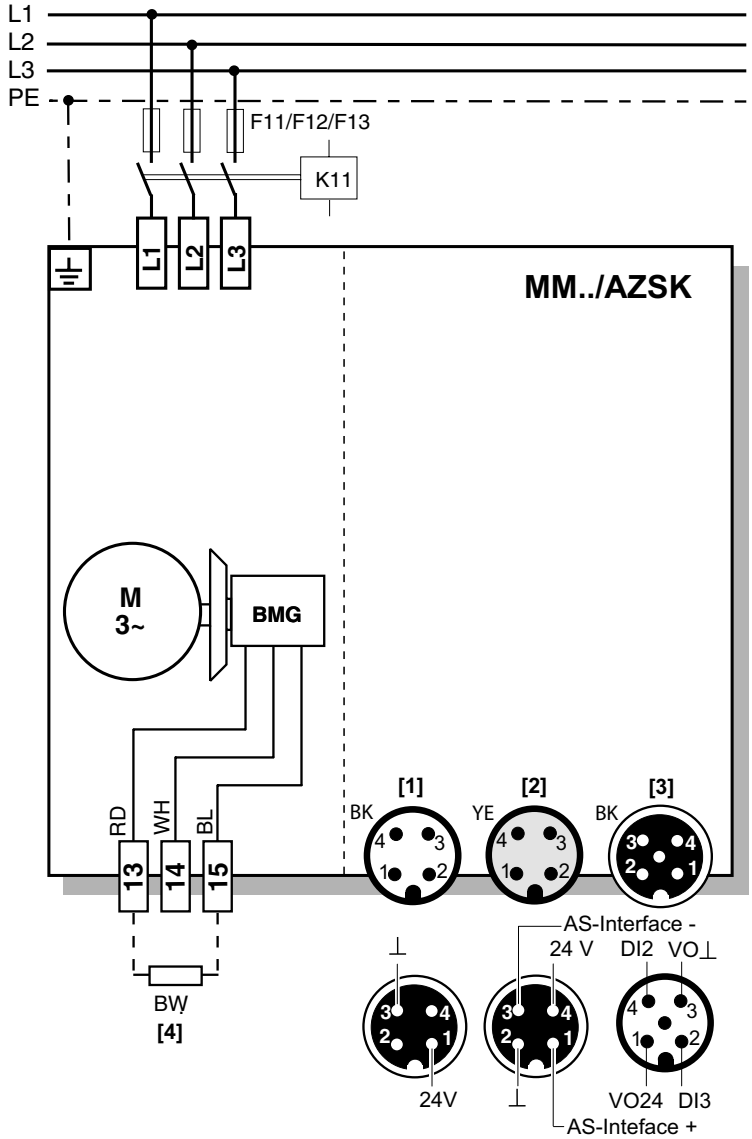

59035AXX

AZSK plug connector			
[1] M12 plug connector (Plug, black)	1	24 V	24 V supply (AUX-PWR)
	2	N. C.	Not assigned
	3	0V	Reference potential AUX-PWR
	4	N.C.	Not assigned
[2] M12 plug connector (Plug, yellow)	1	AS-interface +	AS-interface data line +
	2	0 V	Reference potential AUX-PWR
	3	AS-interface –	AS-interface data line –
	4	24 V	24 V supply (AUX-PWR)
[3] M12 plug connector (Socket, black)	1	VO24	24 V voltage supply for sensors
	2	DI3	Sensor input DI3
	3	VOØ	0 V reference potential for sensors
	4	DI2	Sensor input DI2

[4] Braking resistor BW.. (only for MOVIMOT® without mechanical brake)

7.5 Connection of MOVIMOT® MM../AND3/AZSK (connection option C)

The following illustration shows the connection in version MM../AND3/AZSK:

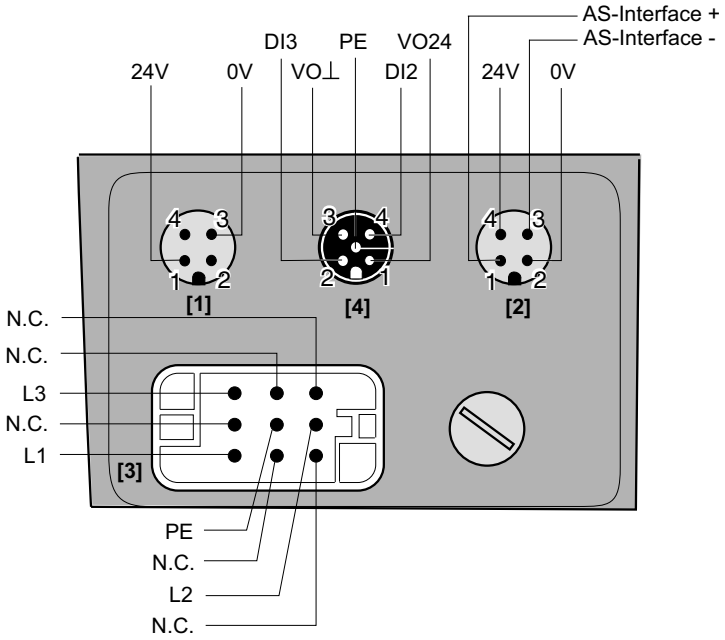

59036AXX

AZSK plug connector			
[1] M12 plug connector (Plug, black)	1	24 V	24 V supply (AUX-PWR)
	2	N. C.	Not assigned
	3	0V	Reference potential AUX-PWR
	4	N.C.	Not assigned
[2] M12 plug connector (Plug, yellow)	1	AS-interface +	AS-interface data line +
	2	0 V	Reference potential AUX-PWR
	3	AS-interface –	AS-interface data line –
	4	24 V	24 V supply (AUX-PWR)
[4] M12 plug connector (Socket, black)	1	VO24	24 V voltage supply for sensors
	2	DI3	Sensor input DI3
	3	VOØ	0 V reference potential for sensors
	4	DI2	Sensor input DI2

AND3 plug connector			
[3] AND3 plug connector (Plug connector)	1	N.C.	Not assigned (reserved for N)
	2	L2	Mains connection L2
	3	N.C.	Not assigned
	4	N.C.	Not assigned
	5	N.C.	Not assigned
	6	L3	Mains connection L3
	7	N.C.	Not assigned
	8	L1	Mains connection L1
	×	PE	PE

7.6 Connection MOVIMOT® options

Connection of URM option

The following illustration shows the connection of the URM option.

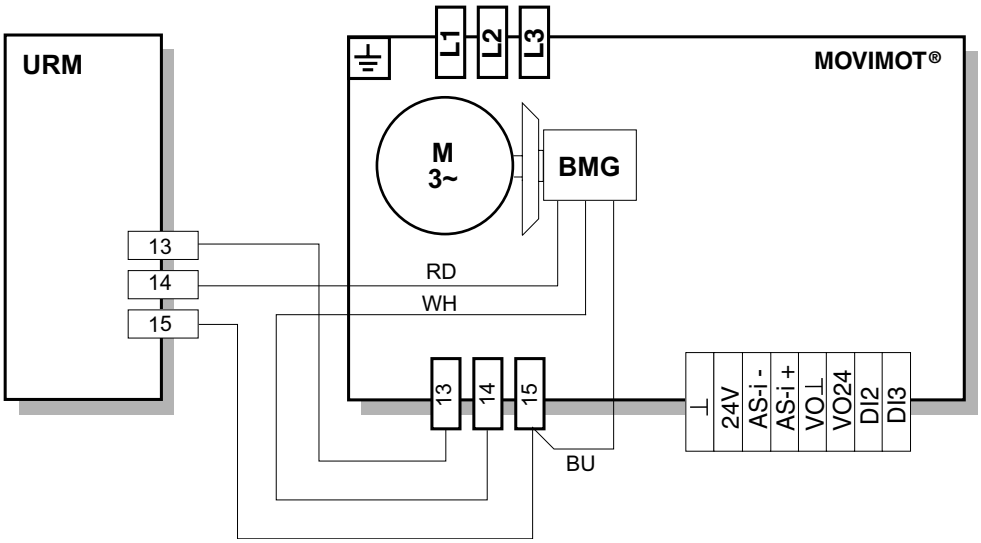

52208AXX

Connection of MNF11A option

The following illustration shows the connection of the MNF option in connection with MOVIMOT® with integrated AS-interface.

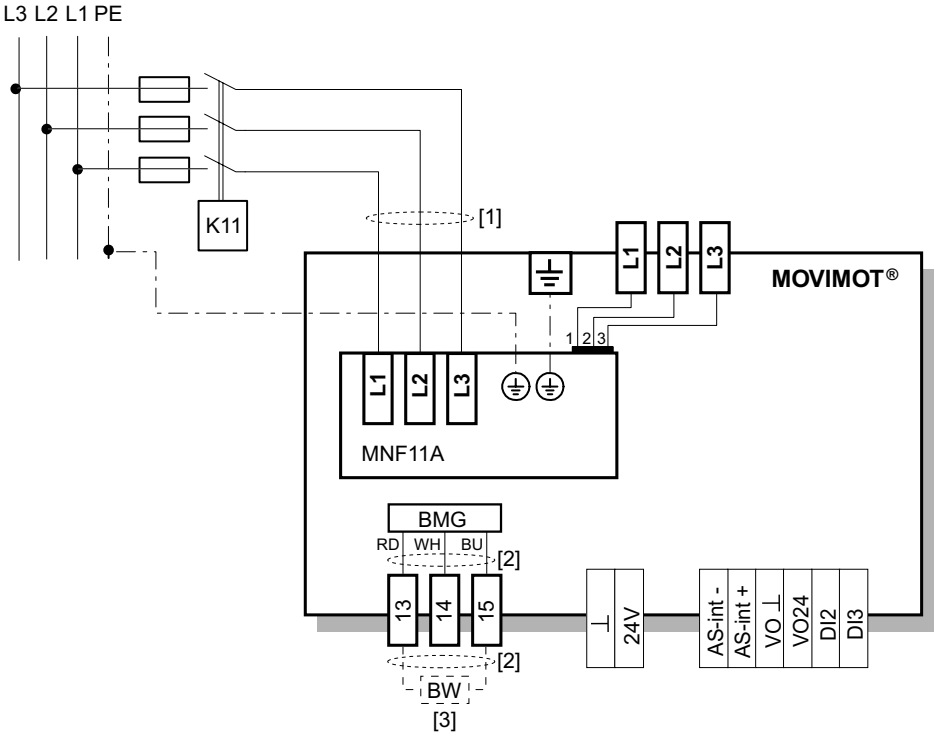

59071AXX

[1] Route the power supply cables so that the conductor lengths are as short as possible.
[2] Route the brake cables as short as possible. Route the brake cables as far as possible from the power supply cables, not parallel to them.
[3] Only for MOVIMOT® without mechanical brake

7.7 Connection of DBG60B terminal

There are several possible ways to the connect the DBG60B control unit and the MOVIMOT® drive.

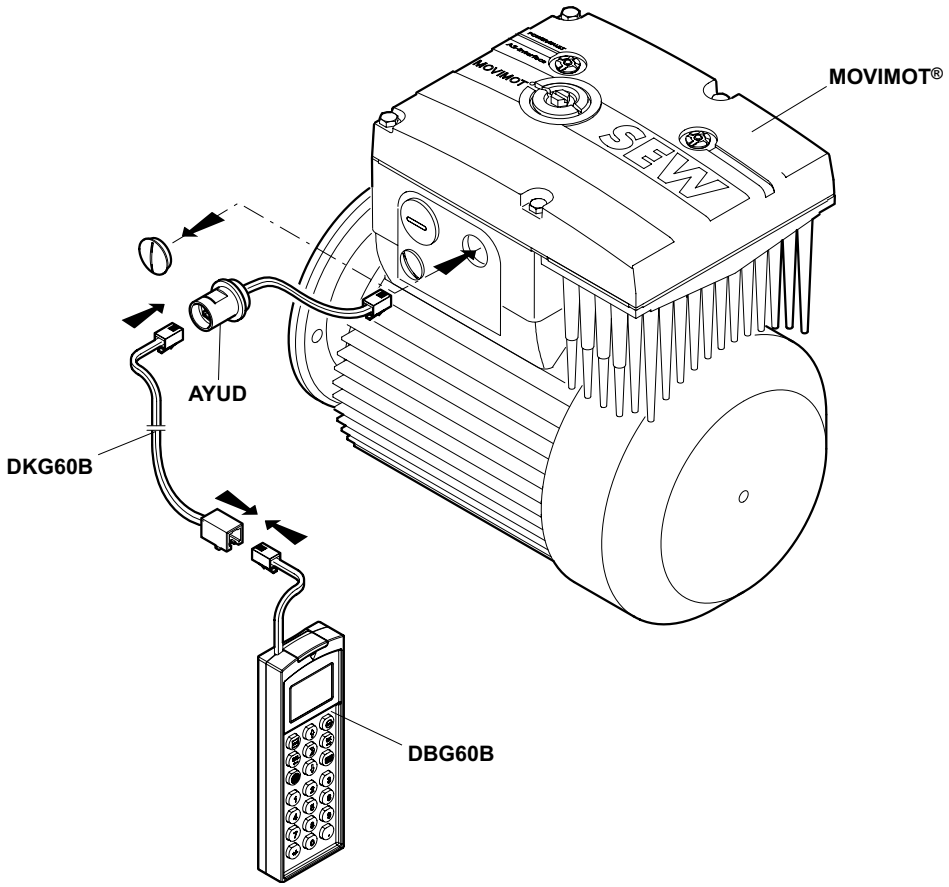

58743AXX

Extension cable	Description (= scope of delivery)	Part Number
DKG60B	• Length 5 m • 4-core, shielded cable (AWG26)	0 817 583 7
Adapter	**Description**	
AYUD	Connection adapter for MOVIMOT® with integrated AS-interface • If the AYUD adapter was specified when the MOVIMOT® drive was ordered, it is included in the scope of delivery of the MOVIMOT® drive. • It can also be retrofitted into the MOVIMOT® drive.	0 818 037 7

The AYUD adapter is integrated in MOVIMOT®.

	WARNING The surface temperature of the MOVIMOT® and the external options, for example, the braking resistor (in particular the heat sink), can reach high temperatures during operation. Burn risk • Only touch the MOVIMOT® drive and the external options when they have sufficiently cooled.

If the AYUD adapter is already installed in the MOVIMOT® drive, the DBG60B hand-held terminal can be connected to the AYUD adapter of the MOVIMOT® drive with integrated AS-interface either directly or using the DBG60B option (5 m extension cable).

The AYUD adapter is retrofitted

	DANGER When working on the unit, dangerous voltage levels may still be present up to one minute after the mains is disconnected. Severe or fatal injuries from electric shock. • Disconnect the MOVIMOT® inverter from the mains and secure it against unintentional reconnection to the voltage supply. • Then wait at least one minute.

	WARNING The surface temperature of the MOVIMOT® and the external options, for example, the braking resistor (in particular the heat sink), can reach high temperatures during operation. Burn risk • Only touch the MOVIMOT® drive and the external options when they have sufficiently cooled.

The AYUD adapter can also be retrofitted.

- Loosen four screws and remove the terminal box cover.
- Remove one blanking plug from the MOVIMOT® terminal box.
- Guide the AYUD adapter cable through the open hole into the terminal box.
- Tightly screw the AYUD adapter onto the terminal box.
- Plug the AYUD adapter's RJ10 plug into the X50 connection socket.
- Screw the terminal box cover onto the terminal box with four screws.
- Plug the DKG60B option's RJ10 plug into the AYUD adapter.
- Plug the RJ10 connector of the DBG60B hand-held terminal into the socket of the DKG60B option.

Connection without AYUD adapter.

	DANGER
	When working on the unit, dangerous voltage levels may still be present up to one minute after the mains is disconnected. Severe or fatal injuries from electric shock. • Disconnect the MOVIMOT® inverter from the mains and secure it against unintentional reconnection to the voltage supply. • Then wait at least one minute.

	WARNING
	The surface temperature of the MOVIMOT® and the external options, for example, the braking resistor (in particular the heat sink), can reach high temperatures during operation. Burn risk • Only touch the MOVIMOT® drive and the external options when they have sufficiently cooled.

For a quick startup, the terminal can also be connected via the DKG60B option (5 m extension cable).

	NOTE
	When you use this connection option, the MOVIMOT® drive no longer has the enclosure class that can be referenced in the section "Technical Data".

- Loosen four screws and remove the terminal box cover.
- Remove one blanking plug from the MOVIMOT® terminal box.
- Guide the DKG60B option through the open hole into the terminal box.
- Plug the DKG60B option's RJ10 plug into the X50 connection socket.
- Screw the terminal box cover onto the terminal box with four screws.
- Plug the RJ10 connector of the DBG60B hand-held terminal into the socket of the DKG60B option.

7.8 PC connection

MOVIMOT® drives with integrated AS-interface contain a diagnostic interface for startup and service. This enables diagnostics, manual mode, and parameter setting by scaling factors with the SEW MOVITOOLS® software **(version 4.0 and higher)**.

Diagnostic interface

The diagnostic interface is located on the MOVIMOT® connector board (see the illustration following):

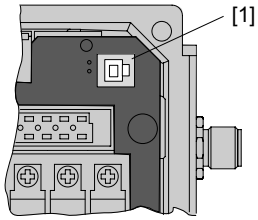

51943AXX

[1] X50 diagnostic interface

Interface adapter

The diagnostic interface can be connected to a commercial PC using one of the following options:

- UWS21B with serial interface RS-232, part number 1 820 456 2
- USB11A with USB interface, part number 0 824 831 1

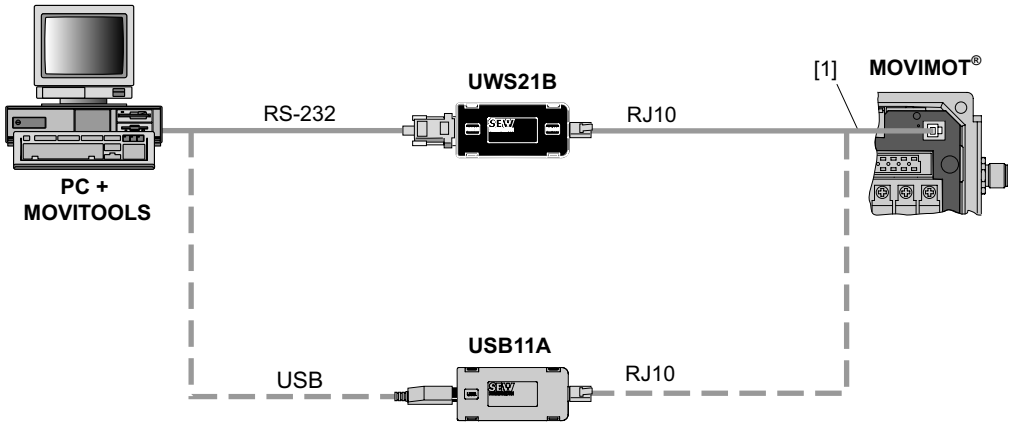

58526AXX

Scope of delivery:

- Interface adapter
- Cable with RJ10 plug connector
- Interface cable RS-232 (UWS21B) or USB (USB11A)

AYUD adapter

The AYUD adapter (option) allows access to the diagnostic interface from outside.

You will find additional information about mounting the AYUD adapter on page 60.

7.9 Connection between MOVIMOT® and motor with mounting close to the motor

If the MOVIMOT® inverter with option P2.A (only in connection with a modular terminal box) is mounted close to the motor, the connection to the motor uses a pre-fabricated cable. The following versions are possible for MOVIMOT®:

- A: MM../P2.A/RO.A/**APG4**
- B: MM../P2.A/RE.A/**ALA4**

The APG4 version results in the following connection options to the motor, dependent upon the hybrid cable used:

Version	A1	A2	A3	A4
MOVIMOT®	APG4	APG4	APG4	APG4
Motor	Cable gland/terminals	ASB4	APG4	IS
Hybrid cable	0 186 742 3	0 593 076 6	0 186 741 5	0 816 325 1 △ 0 816 326 X △ 0 593 278 5 ⅄ 0 593 755 8 ⅄
See also...	Page 65	Page 65	Page 65	Page 65

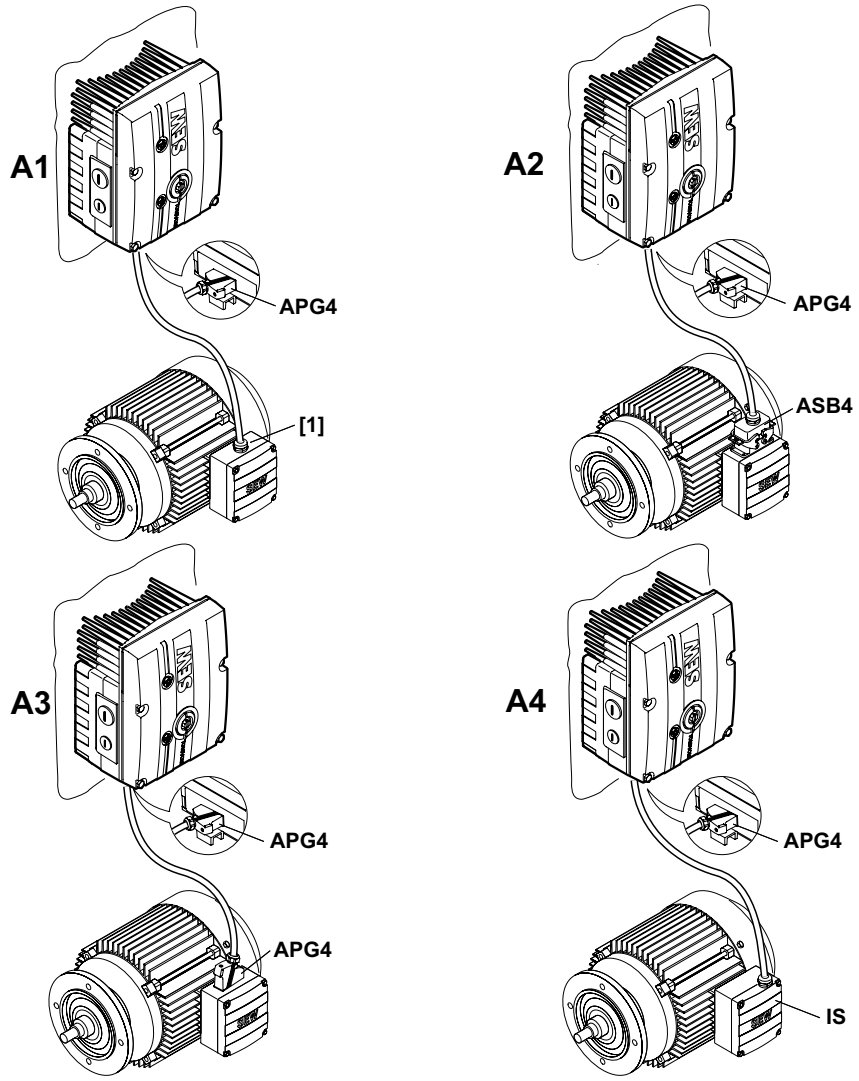

[1] Connection via terminals

The ALA4 version results in the following connection options to the motor, dependent upon the hybrid cable used:

Version	B1	B2
MOVIMOT®	ALA4	ALA4
Motor	Cable gland/terminals	ASB4
Hybrid cable	0 817 948 4	0 816 208 5
Additional Information	Page 65	Page 65

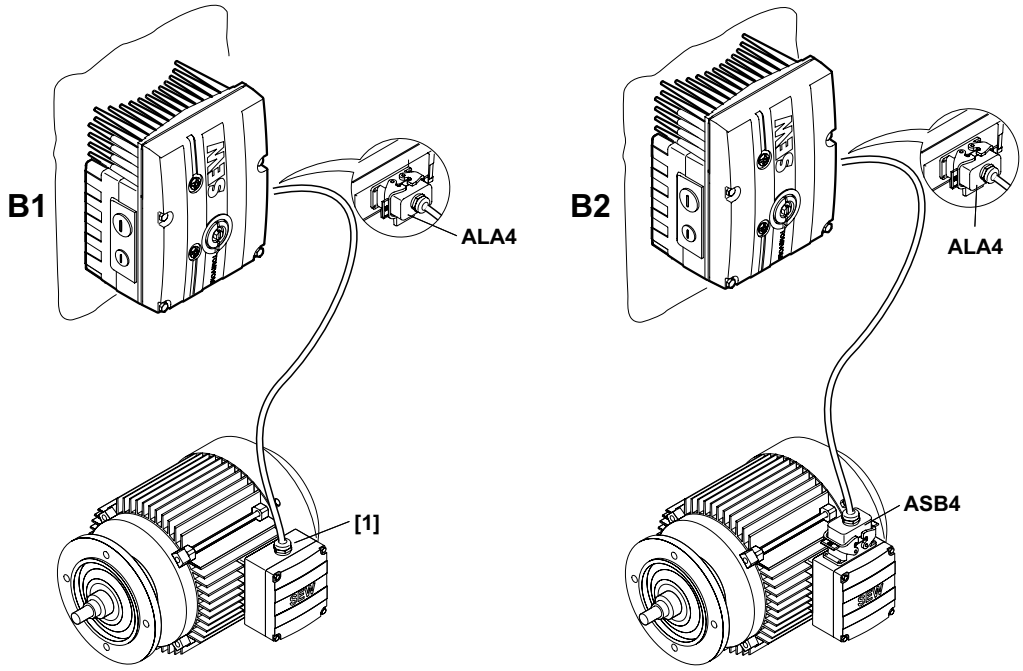

51853AXX

[1] Connection via terminals

Overview of connection between MOVIMOT® and motor when mounted in close proximity to the motor

MOVIMOT® inverter	Version	Hybrid cable	Drive
MM../P2.A/RO.A/APG4 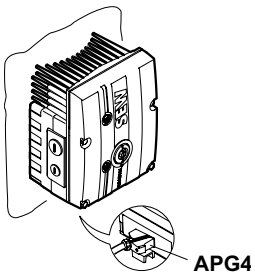	**A1**	Part number: 0 186 742 3 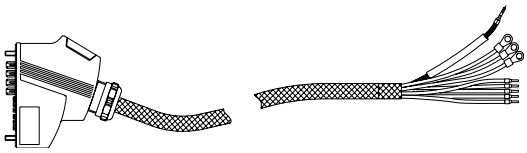	AC motors with cable gland 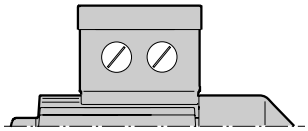
	A2	Part number: 0 593 076 6 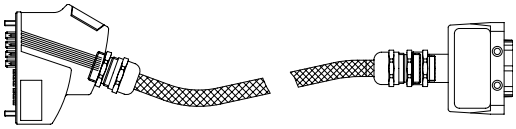	AC motors with ASB4 plug connector 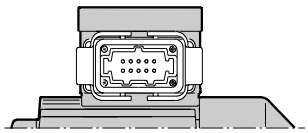
	A3	Part number: 0 186 741 5 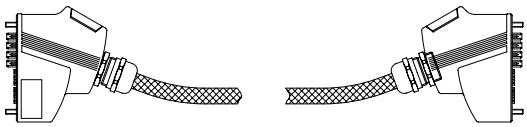	AC motors with APG4 plug connector 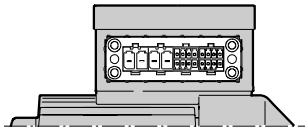
	A4	Part number: 0 593 278 5 (⅄) Part number: 0 816 325 1 (△) 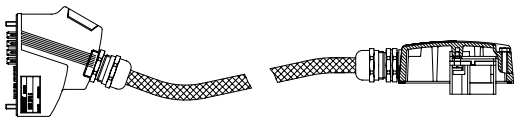	AC motors with IS plug connector, sizes DT71–DT90 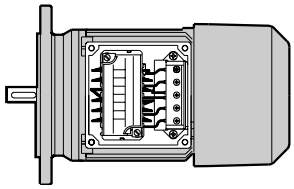
	A4	Part number: 0 593 755 8 (⅄) Part number: 0 816 326 X (△) 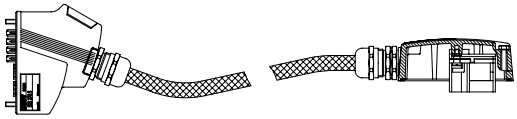	AC motors with IS plug connector, size DV100 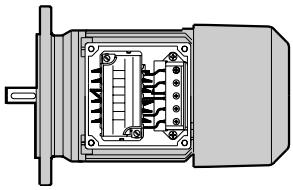
MM../P2.A/RE.A/ALA4 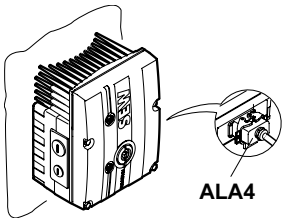	**B1**	Part number: 0 817 948 4 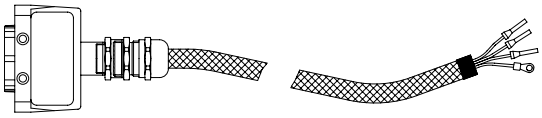	AC motors with cable gland 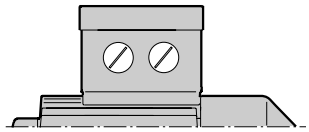
	B2	Part number: 0 816 208 5 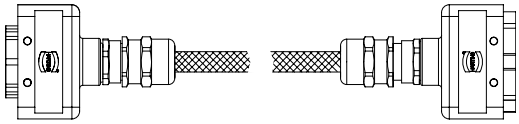	AC motors with ASB4 plug connector 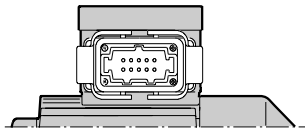

Cable/pin assignment

Cable assignment part numbers 0 186 742 3 and 0 817 948 4:

Cable assignment	
Motor terminal	**Core color/Designation**
U1	Black/U1
V1	Black/V1
W1	Black/W1
4a	Red/13
3a	White/14
5a	Blue/15
1a	Black/1
2a	Black/2
PE terminal	Green-yellow + shield end (internal shield)

8 Startup: MOVIMOT® Standard Version

8.1 Important notes on startup

	DANGER You must disconnect the MOVIMOT® inverter from the mains before removal/installation. Dangerous voltages may still be present for up to one minute after disconnection from the mains. Severe or fatal injuries from electric shock. • Disconnect the MOVIMOT® inverter from the mains and secure it against unintentional reconnection to the voltage supply. • Then wait at least one minute.

	WARNING The surface temperature of the MOVIMOT® and the external options, for example, the braking resistor (in particular the heat sink), can reach high temperatures during operation. Burn risk • Only touch the MOVIMOT® drive and the external options when they have sufficiently cooled.

	NOTES • Before startup, remove the paint protection cap from the status LED. • Before startup, remove the paint protection film from the nameplate. • Check that all protective covers are installed correctly. • Set the "CW/stop" or "CCW/stop" signals for jog mode. • Observe a minimum switch-off time of 2 seconds for the mains contactor K11.

8.2 Description of the controls

Setpoint potentiometer f1

The function of the potentiometer changes depending on the unit's operating mode.

- Control via terminals: Setpoint f1 (selected via term. f1/f2 = "0")
- Control via RS-485: Maximum frequency f_{max}

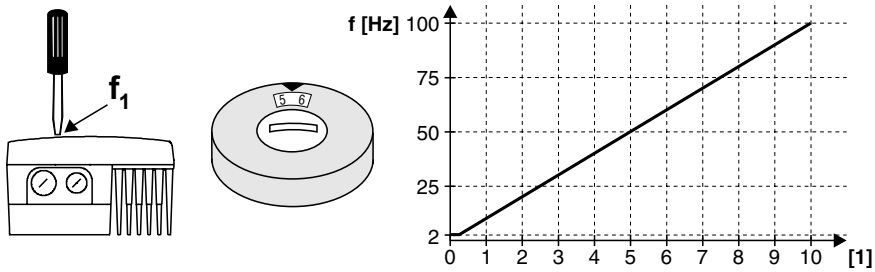

60799AXX

[1] Potentiometer setting

STOP	**STOP** The enclosure specified in the technical data only applies when the screw plug of the setpoint potentiometer is correctly mounted. When the screw plug is not mounted or incorrectly mounted, the MOVIMOT® inverter can be damaged. • Rescrew the screw plug of the f1 setpoint potentiometer (with seal).

Setpoint switch f2

The function of the switch changes depending on the unit's operating mode:

- Control via terminals: Setpoint f2 (selected via term. f1/f2 = "1")
- Control via RS-485: Minimum frequency f_{min}

Switch f2											
Detent position	**0**	1	2	3	4	5	6	7	8	9	10
Setpoint f2 [Hz]	**5**	7	10	15	20	25	35	50	60	70	100
Minimum frequency [Hz]	**2**	5	7	10	12	15	20	25	30	35	40

Switch t1

For integrator ramp (ramp times in relation to a setpoint step change of 50 Hz)

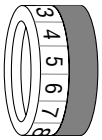

Switch t1											
Detent position	0	1	2	3	4	**5**	6	7	8	9	10
Ramp time t1 [s]	0.1	0.2	0.3	0.5	0.7	**1**	2	3	5	7	10

DIP switches S1 and S2

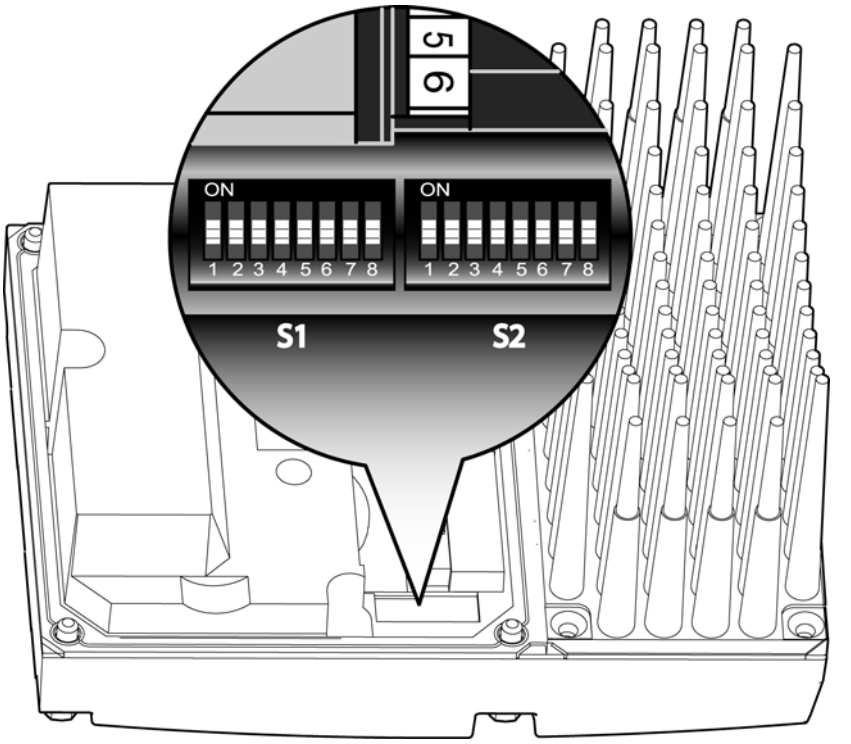

50522AXX

DIP switch S1:

S1 Meaning	1	2	3	4	5	6	7	8
	RS-485 address				Motor protection	Motor power increment	PWM frequency	No-load damping
	2^0	2^1	2^2	2^3				
ON	1	1	1	1	Off	Motor one rating smaller	Variable (16, 8, 4 kHz)	On
OFF	**0**	**0**	**0**	**0**	**On**	**Adjusted**	**4kHz**	**Off**

DIP switch S2:

S2 Meaning	1	2	3	4	5	6	7	8
	Motor type	Brake released without enable	Control process	Speed monitoring	Additional functions			
					2^0	2^1	2^2	2^3
ON	SEW-DZ motor[1)]	On	V/f	On	1	1	1	1
OFF	**IEC motor**	**Off**	**VFC**	**Off**	**0**	**0**	**0**	**0**

1) Only available in Brazil

STOP	**STOP** Move the DIP switch only with suitable tools; e.g., slotted screwdrivers with a blade width < 3 mm. The force with which you move the DIP switch may only be a maximum of 5 N.

8.3 Description of DIP switch S1

DIP switches S1/1-S1/4:

Selectig the RS-485 address of the MOVIMOT® via binary coding

Decimal address	0	1	2	3	4	5	6	7	8	9	10	11	12	13	14	15
S1/1	–	X	–	X	–	X	–	X	–	X	–	X	–	X	–	X
S1/2	–	–	X	X	–	–	X	X	–	–	X	X	–	–	X	X
S1/3	–	–	–	–	X	X	X	X	–	–	–	–	X	X	X	X
S1/4	–	–	–	–	–	–	–	–	X	X	X	X	X	X	X	X

X = ON
– = OFF

Different addresses must be set depending on how the MOVIMOT® is controlled:

Control	RS-485 address
Binary control (terminal operation)	0
Via external AS-interface binary slave (MLK11A)	0
Via terminal (MLG.., MBG..)	1
Via fieldbus interface (MF..)	1
Via MOVIFIT® MC (MTM..)	1
Via intelligent fieldbus modules (MQ..)	1 to 15
Via RS-485 master	1 to 15

DIP switch S1/5

Motor protection switched on or switched off

- When the MOVIMOT® inverter is installed close to the motor (with option P2.A or in field distributor), the motor protection must be deactivated.
- To ensure motor protection, a TH (bimetallic thermostat) must be installed. In doing so, the TH opens the sensor circuit when the rate response temperature is reached (see system manual, "Drive system for decentralized installation", section "Startup with field distributor".

DIP switch S1/6 **Lower motor power rating**

- When activated, this DIP switch enables MOVIMOT® to be assigned to a motor with a lower motor rating. The rated unit power is not affected.
- When a motor with a lower power is used, the overload capacity of the drive can be increased since, from the perspective of the motor, MOVIMOT® is one power increment too big. A higher current can be provided briefly, leading to higher torque ratings.
- The aim of the switch S1/6 is to achieve short-term utilization of the motor's peak torque. The current limit of the respective unit remains the same regardless of the switch position. The motor protection function is adjusted depending on the switch position.
- **Stall protection for the motor is not possible in this operating mode when S1/6 = "ON".**

MOVIMOT® Inverter	Assigned motor			
	S1/6 = OFF		S1/6 = ON	
	W	m	W	m
MM03	DT71D4	DR63L4[1)]	DR63L4[1)]	–
MM05	DT80K4	DT71D4	DT71D4	DFR63L4[1)]
MM07	DT80N4	DT80K4	DT80K4	DT71D4
MM11	DT90S4	DT80N4	DT80N4	DT80K4
MM15	DT90L4	DT90S4	DT90S4	DT80N4
MM22	DV100M4	DT90L4	DT90L4	DT90S4
MM30	DV100L4	DV100M4	DV100M4	DT90L4
MM3X	–	DV100L4	DV100L4	DV100M4

1) Only possible when installed close to the motor

DIP switch S1/7 **Setting the maximum PWM frequency**

- When DIP-SWITCH S1/7 = OFF, the MOVIMOT® operates with 4 kHz PWM frequency.
- When DIP SWITCH S1/7 = ON, the MOVIMOT® operates with a 16 kHz PWM frequency (low noise) and switches back in steps to lower switching frequencies depending on the heat sink temperature.

DIP switch S1/8 **No-load damping function (S1/8 = ON)**

The function prevents resonance vibrations during activation in no-load operation.

8.4 Description of DIP switch S2

DIP switch S2/1

Motor type

- For IEC and NEMA motors, the DIP switch S2/1 must always be set to OFF.
- For DZ motors with rated voltages of 220/380V, 60 Hz (only available in Brazil), the DIP switch must always be set to ON.

DIP switch S2/2

Releasing the brake without enable

When the activated switch S2/2 = "ON", it is possible to release the brake even when there is no drive enable.

Operation with braking resistor

The additional function is not effective during operation with a braking resistor.

Function with terminal control (address = 0)

In terminal control, the brake can be released by setting terminal f1/f2 subject to the following prerequisites:

Terminal status			Enable status	Fault status	Brake function
R	L	f1/f2			
"1" "0"	"0" "1"	"0"	Unit enabled	No unit fault	Brake is controlled by MOVIMOT®, setpoint f1
"1" "0"	"0" "1"	"1"	Unit enabled	No unit fault	Brake is controlled by MOVIMOT®, setpoint f2
"1" "0"	"1" "0"	"0"	Unit is not enabled	No unit fault	Brake applied
"1"	"1"	"1"	Unit is not enabled	No unit fault	Brake applied
"0"	"0"	**"1"**	**Unit is not enabled**	**No unit fault**	**Brake released for manual movement**
All statuses possible			Unit is not enabled	Unit fault	Brake applied

Functions in bus operation

In bus mode, the brake is released by control in the control word:

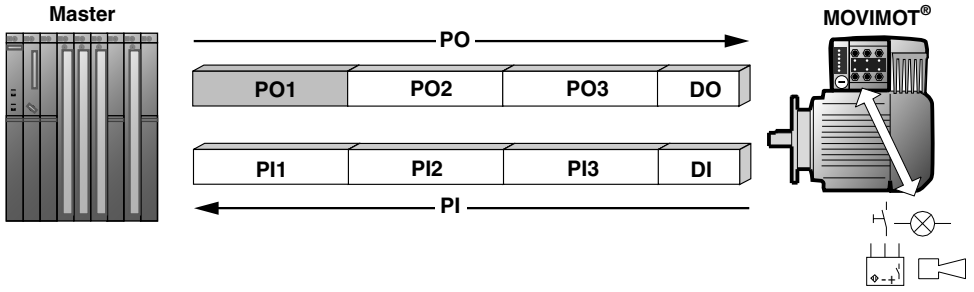

60458AXX

PO = Process output data	PI = Process input data
PO1 = Control word	PI1 = Status word 1
PO2 = Speed [%]	PI2 = Output current
PO3 = Ramp	PI3 = Status word 2
DO = Digital outputs	DI = Digital inputs

By setting bit 8 in the control word, the brake can be released if the following prerequisites are met:

								Basic control block							
15	14	13	12	11	10	9	8	7	6	5	4	3	2	1	0
Control word															
Not assigned[1)]						**Bit "9"**	**Bit "8"**	Not assigned[1]	"1" = Reset	Not assigned[1)]			"1 1 0" = Enable Otherwise stop		

Virtual terminals for releasing the brake without drive enable

Virtual terminals for "Brake applied at downward ramp" (rapid stop).
Only for MOVIMOT® with additional function 7 or 12

1) Recommendation for all unassigned bits = "0"

Enable status	Fault status	Status bit 8 in control word	Brake function
Unit enabled	No unit fault / no communication timeout	"0"	Brake is controlled by MOVIMOT®
Unit enabled	No unit fault / no communication timeout	"1"	Brake is controlled by MOVIMOT®
Unit is not enabled	No unit fault / no communication timeout	"0"	Brake applied
Unit is not enabled	**No unit fault / no communication timeout**	**"1"**	**Brake released for manual movement**
Unit is not enabled	Unit fault / communication timeout	"1" or "0"	Brake applied

NOTE

To be able to release the brake without enabling the drive, the bit D3 (reset/controller enable) must be set to be able to enable the drive.

Setpoint selection in terminal operation

Setpoint selection in terminal operation depending on the status of terminal f1/f2:

Enable status	Terminal f1/f2	Active setpoint
Unit enabled	Terminal f1/f2 = "0"	Setpoint potentiometer f1 active
Unit enabled	Terminal f1/f2 = "1"	Setpoint potentiometer f2 active

Behavior if unit not ready

If the unit is not ready, the brake is always applied irrespective of the setting of terminal f1/f2 or bit 8 in the control word.

LED display

The yellow LED display flashes periodically at a fast rate (t_{on} : t_{off} = 100ms : 300ms) ifthe brake has been released for manual movement. This applies both to terminal operation and bus operation.

DIP switch S2/3

Control process

- DIP switch S2/3 = OFF: VFC operation for 4-pole motors
- DIP switch S2/3 = ON: V/f operation reserved for special cases

DIP switch S2/4

Speed monitoring

- Speed monitoring (S2/4 = "ON") is used for protecting the drive in case of a blockage.
- If the drive is operated at the current limit for longer than 1 second when speed monitoring is active (S2/4 = "ON"), the speed monitoring is tripped. The MOVIMOT® unit signals a fault using the status LED (red, slow flashing, fault code 08). The current limit must be reached uninterrupted for the duration of the deceleration time before monitoring responds.

DIP switches S2/5 to S2/8

Additional functions

- Additional functions can be selected using binary coding of the DIP switches.
- The possible values can be set as follows:

Decimal Value	0	1	2	3	4	5	6	7	8	9	10	11	12	13	14	15
S2/5	–	X	–	X	–	X	–	X	–	X	–	X	–	X	–	X
S2/6	–	–	X	X	–	–	X	X	–	–	X	X	–	–	X	X
S2/7	–	–	–	–	X	X	X	X	–	–	–	–	X	X	X	X
S2/8	–	–	–	–	–	–	–	–	X	X	X	X	X	X	X	X

X = ON

– = OFF

- An overview of the additional functions that can be selected is given on page 75.

8.5 Additional functions for MM..C-503-00

Overview of the additional functions

Decimal value:	Brief description	Intended operating mode		See page
		Bus	Termi-nals	
0	Basic functions, no additional function selected	X	X	–
1	MOVIMOT® with increased ramp times	X	X	Page 76
2	MOVIMOT® with adjustable current limitation (fault when value is exceeded)	X	X	Page 76
3	MOVIMOT® with adjustable current limitation (can be changed using terminal f1/f2)	X	X	Page 77
4	MOVIMOT® with bus parameter setting	X	–	Page 79
5	MOVIMOT® with motor protection via TH	X	–	Page 81
6	MOVIMOT® with maximum 8 kHz PWM frequency	X	X	Page 82
7	MOVIMOT® with rapid start/stop	X	X	Page 83
8	MOVIMOT ® with minimum frequency 0 Hz	X	X	Page 85
9	MOVIMOT® for hoist applications	X	X	Page 86
10	MOVIMOT® with minimum frequency 0 Hz and reduced torque at low frequencies	X	X	Page 89
11	Monitoring of supply-phase fault deactivated	X	X	Page 90
12	MOVIMOT® with rapid start/stop and motor protection via TH	X	X	Page 90
13	MOVIMOT® with extended speed monitoring	X	X	Page 94
14	MOVIMOT® with deactivated slip compensation	X	X	Page 97
15	Not assigned	–	–	–

Additional function 1

MOVIMOT® with increased ramp times

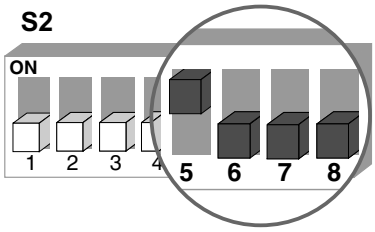

05592AXX

Functional description

- It is possible to set ramp times of up to 40 s.
- In bus operation, a ramp time of maximum 40s can be transmitted by using 3 process data items.

Changed ramp times

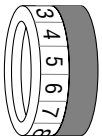

Switch t1											
Detent position	0	1	2	3	4	5	6	7	8	9	10
Ramp time t1 [s]	0.1	0.2	0.3	0.5	0.7	1	20	25	30	35	40

☐ = Corresponds to standard setting
▒ = Changed ramp times

Additional function 2

MOVIMOT® with adjustable current limitation (fault if exceeded)

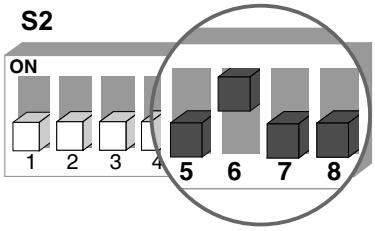

05596AXX

Functional description

- The current limitation can be set using switch f2.
- The setpoint f2 (for control via terminals) or the minimum frequency (for control via RS-485) cannot be changed and are set to the following values:
  - Setpoint f2: 5 Hz
  - Minimum frequency: 2 Hz
- The monitoring function comes into effect above 15 Hz. If the drive operates at the current limit for longer than 500 ms, the unit changes to fault status (fault 44). The fault is displayed by a red LED that flashes quickly.

Adjustable current limits

Switch f2											
Detent position	0	1	2	3	4	5	6	7	8	9	10
I_{max} [%] of I_N	90	95	100	105	110	115	120	130	140	150	160

Additional function 3

MOVIMOT® with adjustable current limitation (can be changed terminal f1/f/2); the frequency is reduced when this value is exceeded.

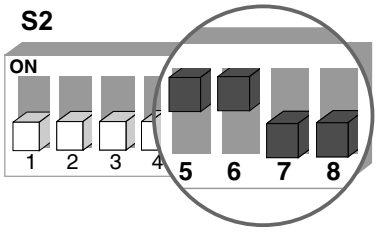

05598AXX

Functional description

The current limit can be set using switch f2. Binary input terminal f1/f2 can be used to switch between the maximum current limit and the current limit set by switch f2.

Response when current limit is reached

- When the current limit is reached, the unit reduces the frequency using the current limitation function and may stop the ramp to prevent a current increase.
- If the unit is at the current limit, the status LED displays the status with rapid green flashing.

System-internal values for the setpoint f2/minimum frequency

- It is no longer possible to switch via terminals between setpoint f1 and setpoint f2 during terminal operation pr to set the minimum frequency in bus operation.
- The minimum frequency in bus operation has a fixed setting of 2 Hz.

Adjustable current limits

Switch f2											
Detent position	0	1	2	3	4	5	6	7	8	9	10
I_{max} [%] of I_N	60	70	80	90	100	110	120	130	140	150	160

Selecting the current limits via binary input terminal f1/f2

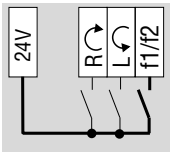

60193AXX

f1/f2 = "0" 160% current limit is active

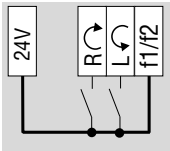

60194AXX

f1/f2 = "1" The current limit set using switch f2 is active.
The selection can also be made when the unit is enabled.

Influencing the current characteristic curve

The current limit curve is calculated with a constant factor by selecting a lower current limit.

Motor with star connection

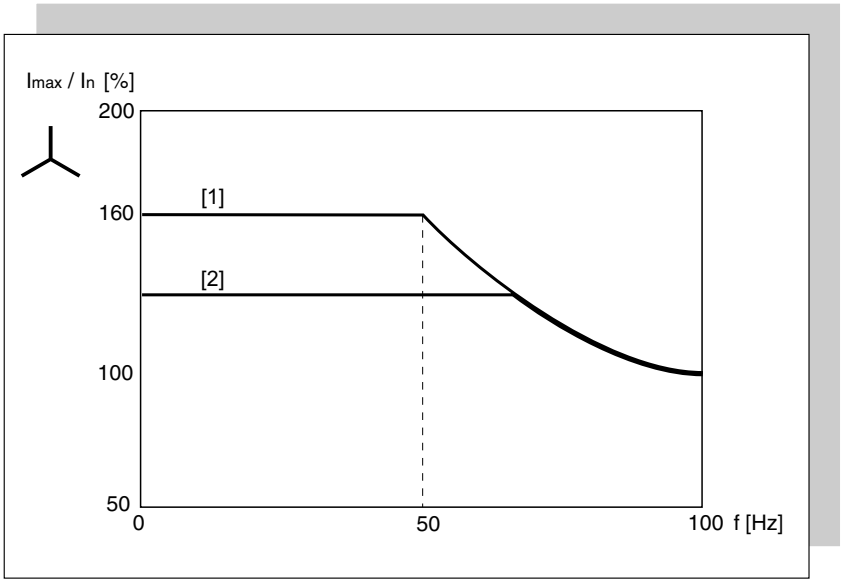

50851AXX

[1] Current limit characteristic curve of standard function
[2] Reduced current limit for additional function 3 and terminals f1/f2 = "1"

Motor with delta connection

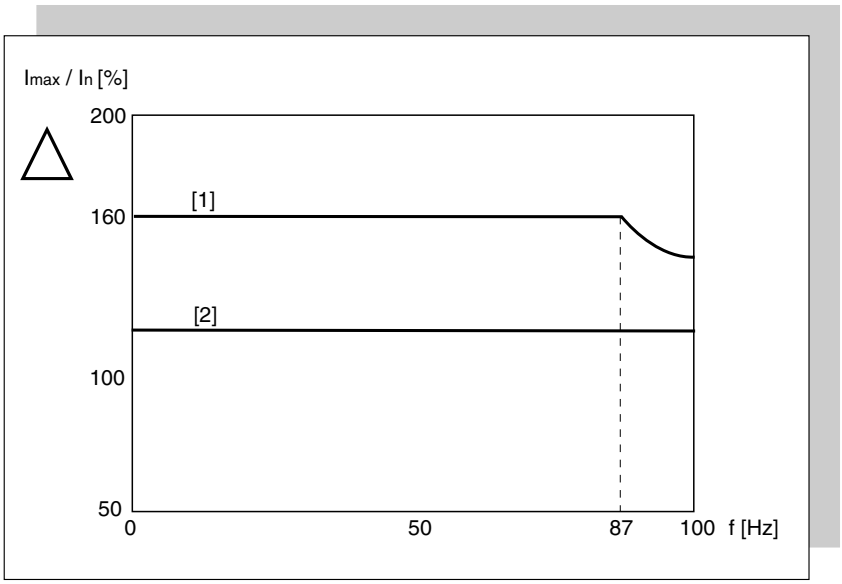

50852AXX

[1] Current limit characteristic curve of standard function
[2] Reduced current limit for additional function 3 and terminals f1/f2 = "1"

Additional function 4

MOVIMOT® with bus parameter setting

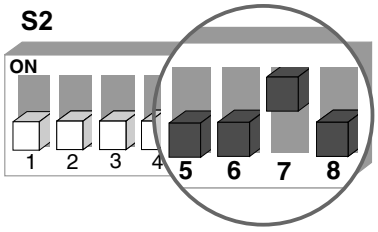

05599AXX

	NOTES
	The function is implemented exclusively with bus operation via intelligent fieldbus interfaces MQ.. with integrated minicontroller. A parameter channel is available to operate the unit, and the values are saved in EEPROM. You can find more information in the following SEW-EURODRIVE manuals: • DeviceNet/CANopen Interfaces, Field Distributors • InterBus Interfaces, Field Distributors • PROFIBUS Interfaces, Field Distributors

Functional description

Potentiometer f1 as well as switches f2 and t1 are deactivated. The settings of the potentiometer and the switches are ignored by MOVIMOT®. The setting of the DIP switch is still read in from the unit. Functions selected using a DIP switch cannot be changed using the bus.

Block diagram

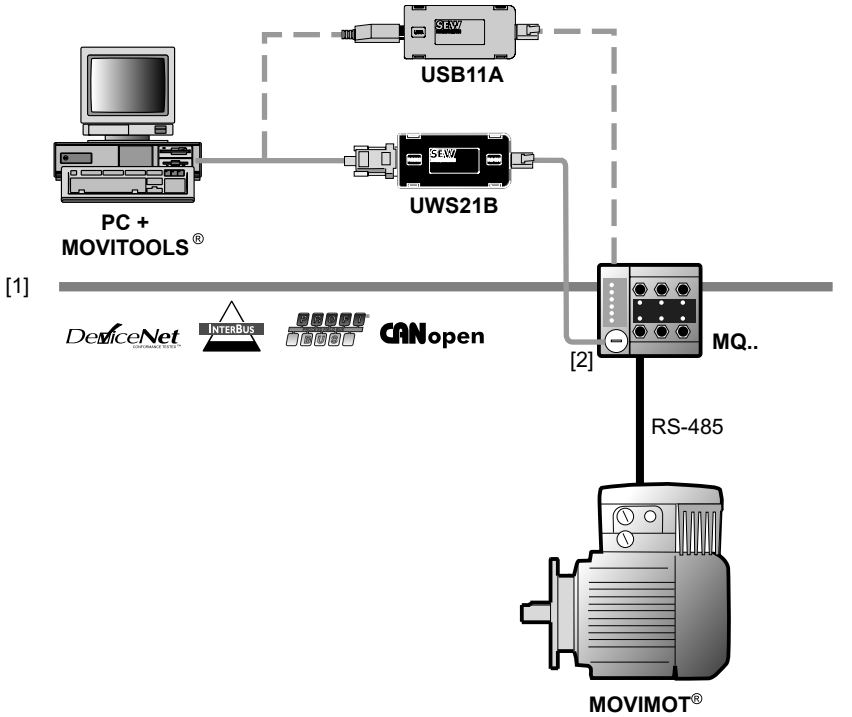

58524AXX

[1] Fieldbus
[2] Diagnostic interface

Changing the parameters in MOVITOOLS®

Open the MOVITOOLS®/Shell as follows:

- Select "MOVIMOT®" device type [1]
- In the "Execute Program" group box, click "Shell" [2]

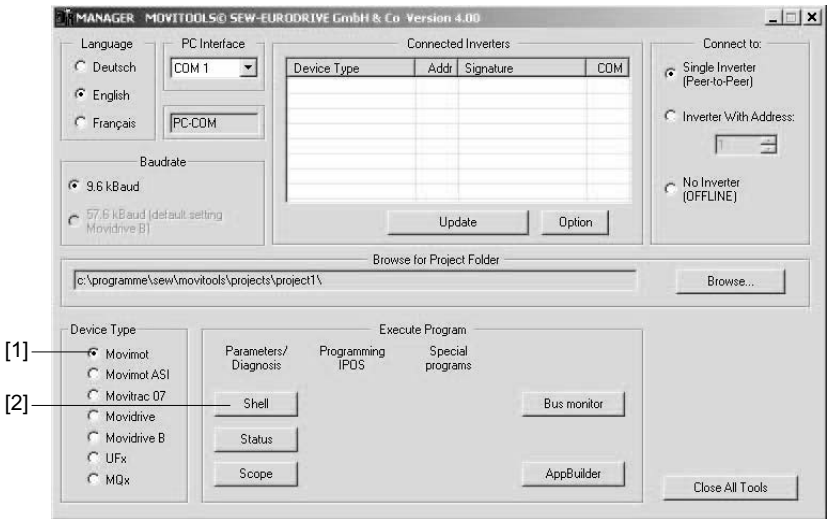

59888AXX

After opening MOVITOOLS®/Shell, the following parameters are accessible. They can be changed and saved in the unit.

Name	Area	Index	Parameter number	Step width
Ramp up	0.1...**1**...2000 [s]	8807	130	0.1 s – 1 s: 0.01 1 s – 10 s: 0.1 10 s – 100 s: 1 100 s – 2000 s: 10
Ramp down	0.1...**1**...2000 [s]	8808	131	
Minimum frequency	**2**...100 [Hz]	8899	305	0.1
Maximum frequency[1)]	**2**...100 [Hz]	8900	306	0.1
Current limit	60...**160** [%]	8518	303	1
Pre-magnetization time	0...**0.4**...2 [s]	8526	323	0.001
Post-magnetization time	0...**0.1**...2 [s]	8585	732	0.001
Parameter lock	On/**Off**	8595	803	–
Factory setting	Yes/**No**	8594	802	–
Deceleration time Speed monitoring	0.1...**1**...10.0 [s]	8558	501	0.1
Brake release time	**0**..2 [s]	8749	731	0.001
Slip compensation[2)]	0..500 [1/min]	8527	324	0.2

Factory setting = bold

1) Example: Maximum frequency = 60 Hz
Bus setpoint = 10 %
Frequency setpoint = 6 Hz

2) The value will be set to the rated motor slip when there is a change in the additional function setting.

- The factory setting is activated as soon as additional function 4 is activated via DIP switches. If the additional function which was selected via DIP switches remains unchanged after the 24 V operating voltage is switched off, the last valid values from EEPROM will be used after reactivation.
- The start frequency is fixed at 0.5 Hz, the stop frequency at 3 Hz.
- If the set setpoint or maximum frequency is lower than the set minimum frequency, the minimum frequency becomes active.
- The parameters are only evaluated with this additional function.

Additional function 5

MOVIMOT® Motor protection via TH

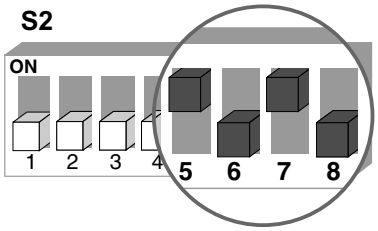

05600AXX

	NOTE
	The additional function is only designed to be implemented during bus operation when MOVIMOT® is installed close to the motor (with option P2.A or in field distributor).

Functional description

Functions in combination with fieldbus interfaces MF.. and MQ..:

- Additional function 5 generates fault 84 (motor over temperature) when both terminals for the direction of rotation are open.
- When the MOVIMOT® inverter (with P2.A option or in a field distributor) is mounted close to the motor, the direction terminals are set to "0" by the TH during over temperatures in the motor.
- Fault 84 is displayed by a flashing signal of the status LED on the MOVIMOT®.
- When generated, fault 84 is also transmitted via the fieldbus.

Functions in combination with fieldbus interfaces MQ..

- MOVIMOT® bus parameter setting according to additional function 4 (see page 79)

Functions in combination with fieldbus interfaces MF.

- Potentiometer f1 and switches f2 and t1 are deactivated. The following values apply:

Name	Value
Ramp up	1 [s]
Ramp down	1 [s]
Minimum frequency	2 [Hz]
Maximum frequency	100 [Hz]
Current limit	160 [%]
Pre-magnetization time	0.4 [s]
Post-magnetization time	0.1 [s]
Speed monitoring delay time	1 [s]
Brake release time	0 [s]
Slip compensation	Rated motor slip

Tripping conditions for fault 84

Fault 84, "Over temperature motor" is tripped if **all** of the following conditions are met:

- The standard MOVIMOT® motor protection function is deactivated via DIP switch S1/5 = ON.
- The terminals for direction of rotation are wired to 24 V via a TH as shown in the following illustration.

With field distributor:

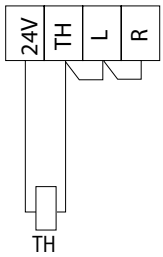

52119AXX

With mounting close to the motor with option P2.A:

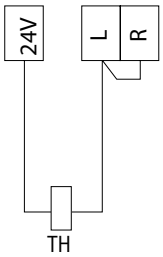

52120AXX

- The TH tripped due to excessive heat in the motor (enable for both terminals for the direction of rotation is revoked).
- Supply voltage is present.

	NOTE
	If only the DC 24 V supply voltage is present at the MOVIMOT®, the fault is not tripped.

Additional function 6

MOVIMOT® with maximum 8 kHz PWM frequency

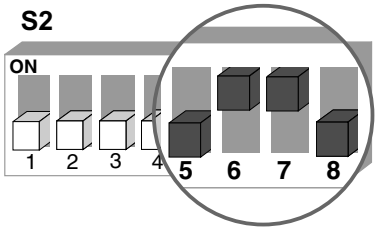

05601AXX

Functional description

- The additional function reduces the maximum PWM frequency that can be set via S1/7 from 16 kHz to 8 kHz.
- When DIP switch S1/7 = "ON", the unit operates with an 8 kHz PWM frequency and switches back to 4 kHz depending on the heat sink temperature.

	S1/7 without additional function 6	**S1/7 with additional function 6**
ON	PWM frequency variable 16, 8, 4 kHz	PWM frequency variable 8, 4 kHz
OFF	PWM frequency 4 kHz	PWM frequency 4 kHz

Additional function 7

MOVIMOT® with rapid start / stop

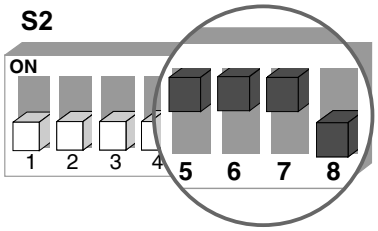

05602AXX

Functional description

- The pre-magnetization time is set at 0 s, independent of whether MOVIMOT® is operated in bus or terminal operation.
- This means that pre-magnetization is not performed when the drive is enabled in order to begin the acceleration at the setpoint ramp as quickly as possible.
- The subsequent behavior of MOVIMOT® is dependent on the operating mode and whether a mechanical brake is connected.

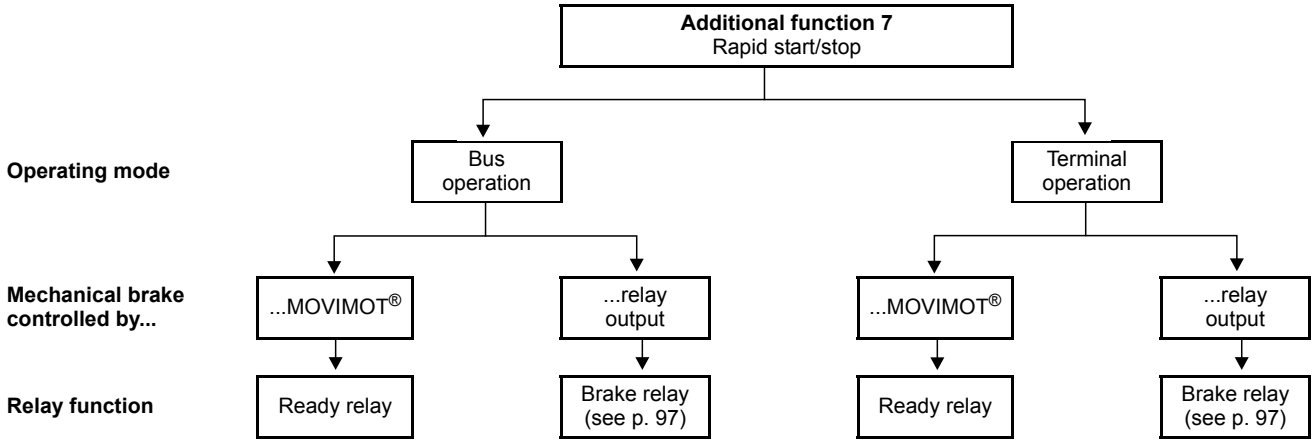

Bus operation

Mechanical brake controlled by MOVIMOT®:

- Terminals 13, 14 and 15 are assigned through the brake coil of the mechanical brake on the MOVIMOT® wiring board.
- A new function, "Brake applied at downward ramp" is introduced. Bit 9 in the control word is assigned with this function as a virtual terminal according to the MOVILINK® profile.
- As soon as bit 9 is set during the downwards ramp, MOVIMOT® applies the brake and inhibits the output stage.
- If the motor frequency is less than the stop frequency, the brake is applied at the downwards ramp regardless of the status of bit 9.
- The relay is switched as a ready relay (standard function).

Mechanical brake controlled by relay output:

- A braking resistor (BW..) must be connected to terminals 13 and 15 on the MOVIMOT® wiring board; terminal 14 is not assigned.
- Relay K1 functions as a brake control relay. This means that the ready signal function is no longer available.

  It is imperative that you observe the section "Use of relay output with additional functions 7, 9, 12, and 13", starting on page 97.

DANGER

If DIP switches S2/5 to S2/8 are set incorrectly, the brake can release.

If the section "Use of relay output with additional functions 7, 9, 12, and 13" is not observed, a crushing risk could arise through unintentional starting of the drive.

Severe or fatal injuries.

- Observe the note in the section "Use of relay output with additional functions 7, 9, 12, and 13", starting on page 97.

- A new function, "Brake applied at downward ramp" is introduced. Bit 9 in the control word is assigned with this function as a virtual terminal according to the MOVILINK® profile.
- As soon as bit 9 is set during the downwards ramp, the relay output applies the brake and MOVIMOT® inhibits the output stage.
- If the motor frequency is less than the stop frequency, the brake is applied at the downwards ramp regardless of the status of bit 9.

"Brake control in bus operation" flowchart:

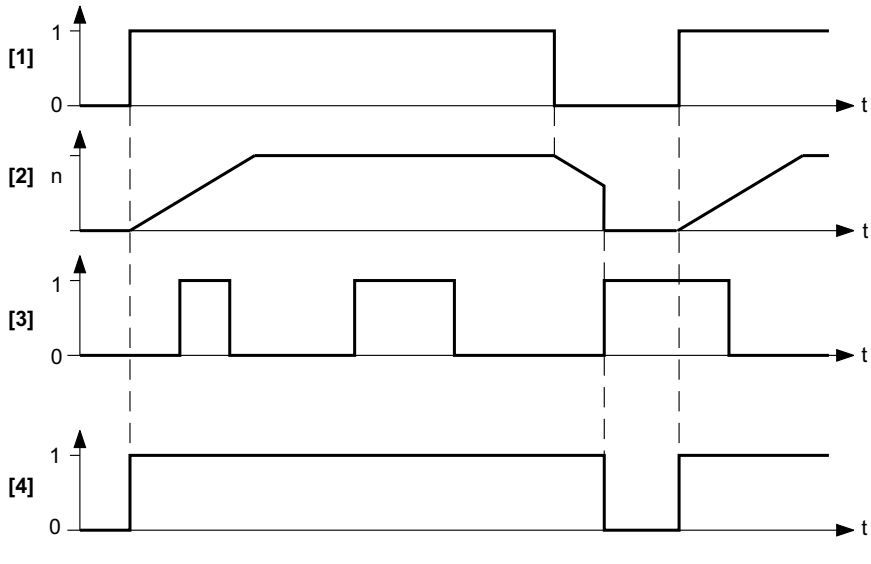

[1] Enable terminals/control word
[2] Speed
[3] Bit 9
[4] Brake control signal: 1= open, 0 = closed

Terminal operation

Mechanical brake controlled by MOVIMOT®:

- Terminals 13, 14 and 15 are assigned to the brake coil of the mechanical brake on the MOVIMOT® wiring board.
- The mechanical brake cannot be influenced by the terminals. The brake works analogous to a unit without additional function.
- The relay is switched as a ready relay (standard function).

Mechanical brake controlled by relay output

- A braking resistor (BW..) must be connected to terminals 13 and 15 on the MOVIMOT® wiring board; terminal 14 is not assigned.
- Relay K1 works as a brake control relay; the ready signal function is thus no longer available. It is imperative that you observe the section "Use of relay output with additional functions 7, 9, 12, and 13", starting on page 97.

	NOTE
	The rapid stop function cannot be used in terminal operation.

Additional function 8

MOVIMOT® with minimum frequency 0 Hz

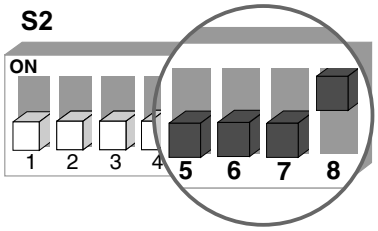

05603AXX

Functional description

Control via RS-485:

When switch f2 is in detent position 0, the minimum frequency measures 0 Hz with the activated additional function. All other values that can be set remain unchanged.

Switch f2											
Detent position	**0**	1	2	3	4	5	6	7	8	9	10
Minimum frequency [Hz] With additional function activated	**0**	5	7	10	12	15	20	25	30	35	40
Minimum frequency [Hz] Without additional function	**2**	5	7	10	12	15	20	25	30	35	40

Control via terminals:

When switch f2 is in detent position 0, the setpoint f2 measures 0 Hz with the activated additional function. All other values that can be set remain unchanged.

Switch f2											
Detent position	**0**	1	2	3	4	5	6	7	8	9	10
Setpoint f2 [Hz] With additional function activated	0	7	10	15	20	25	35	50	60	70	100
Setpoint f2 [Hz] Without additional function	**5**	7	10	15	20	25	35	50	60	70	100

Additional function 9

MOVIMOT® for hoist applications

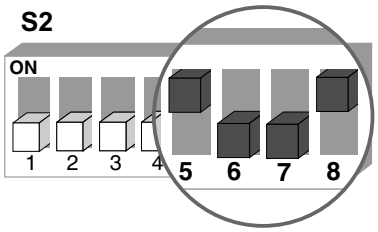

05604AXX

	DANGER Risk of fatal injury if the hoist falls. Severe or fatal injuries or damage to property. • MOVIMOT® is not designed for use as a safety device in hoist applications. Use monitoring systems or mechanical protection devices as safety equipment.

	STOP In order to avoid a system overload, the MOVIMOT® drive may not be operated at the current limit. Activate speed monitoring. In this way, you ensure that the MOVIMOT® drive is not operated for a longer time (> 1 s) at the current limit.

Prerequisites

	STOP MOVIMOT® can only be used in hoist applications if the following prerequisites are met: • Additional function 9 can only be used with brake motors. • Ensure that the DIP switch S2/3 =OFF (VFC operation). • The use of the BGM brake controller in connection with an external braking resistor is imperative (beginning at page 97). • We recommend that you activate the "Speed monitoring" function (page 74).

Functional description

- The start frequency for terminal and bus operation is 2 Hz If the function is not activated, the start frequency is 0.5 Hz.
- The brake release time is fixed at 200 ms (standard = 0 ms), which prevents the motor for working against the applied brake.
- The brake application time (post-magnetization time) is 150 ms (standard = 100 ms), which ensures that the brake is applied as soon as the motor stops generating torque.
- The subsequent behavior of MOVIMOT® is dependent on the operating mode (see page 88).

Overview of brake control with additional function 9:

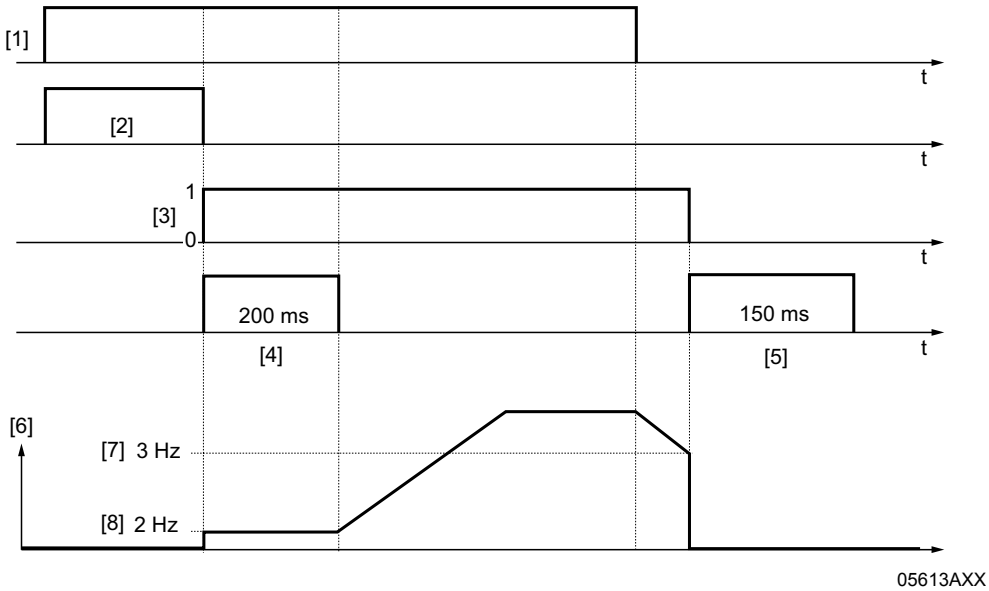

[1] Enable
[2] Pre-magnetization time
[3] Brake control signal
1= open, 0 = closed
[4] Brake release time
[5] Brake application time
(Post-magnetization time)
[6] frequency
[7] Stop frequency
[8] Start / minimum frequency

Bus operation

- **The mechanical brake is controlled by the relay output.**
- A braking resistor (BW..) must be connected to terminals 13 and 15 on the MOVIMOT® wiring board; terminal 14 is not assigned.
- Relay K1 functions as a brake control relay. This means that the ready signal function is no longer available

  It is imperative that you observe the section "Use of relay output with additional functions 7, 9, 12, and 13", starting on page 97.

DANGER

If DIP switches S2/5 to S2/8 are set incorrectly, the brake can release.

If the section "Use of relay output with additional functions 7, 9, 12, and 13" is not observed, a crushing risk could arise through unintentional starting of the drive.

Severe or fatal injuries.

- Observe the note in the section "Use of relay output with additional functions 7, 9, 12, and 13", starting on page 97.

- A new function, "Brake applied at downward ramp" is introduced. Bit 9 in the control word is assigned with this function as a virtual terminal according to the MOVILINK® profile.
- As soon as bit 9 is set during the downwards ramp, the relay output applies the brake and MOVIMOT® inhibits the output stage.
- If the motor frequency is less than the stop frequency, the brake is applied at the downwards ramp regardless of the status of bit 9.

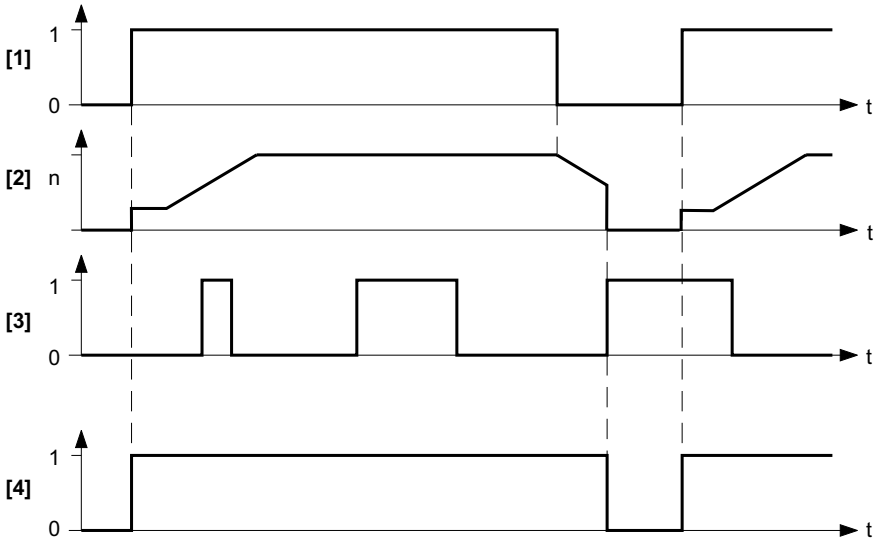

05648AXX

[1] Enable terminals/control word
[2] Speed
[3] Bit 9
[4] Brake control signal: 1= open, 0 = closed

Terminal operation

- **The mechanical brake is controlled by the relay output.**
- A braking resistor (BW..) must be connected to terminals 13 and 15 on the MOVIMOT® wiring board; terminal 14 is not assigned.
- The relay works as a brake control relay; the ready signal function is thus no longer available.

	NOTE
	Applying the brakes via bit 9 cannot be used in terminal operation.

Additional function 10

MOVIMOT® with reduced torque at low frequencies

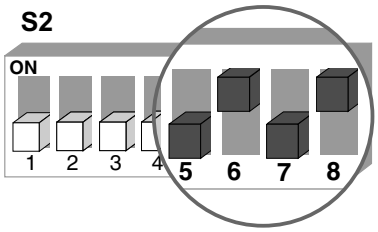

05606AXX

Functional description

- Through reducing the slip compensation and active current at low speeds, the drive only develops a reduced torque (see the illustration which follows).
- Minimum frequency = 0 Hz (see Additional function 8 on page 85).

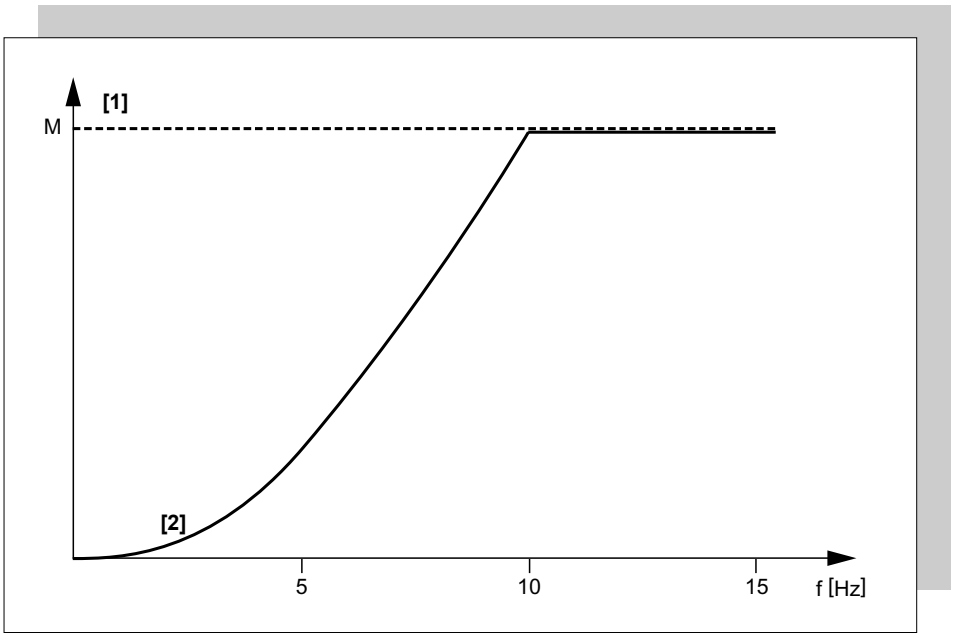

50907AXX

[1] Maximum torque during VFC operation
[2] Maximum torque with activated additional function

Additional function 11

Deactivation of phase failure monitoring

	STOP Deactivating the phase failure monitoring in unfavorable operating conditions can damage the unit.

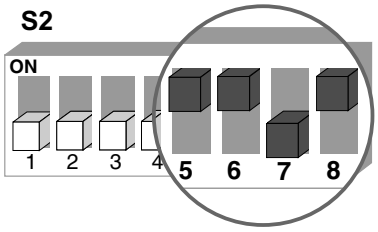

06378AXX

Functional description

- When the additional function is activated, phase monitoring does not occur.
- This is appropriate, for example, for supply systems with short-term asymmetries.

Additional function 12

MOVIMOT® with rapid start/stop and motor protection via TH

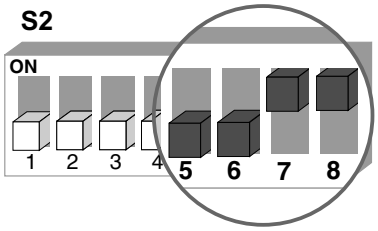

06379AXX

Functional description

- The additional function is active in terminal and bus operation, but there are differences with respect to the usable functional scope.
- When the MOVIMOT® inverter is installed close to the motor (with option P2.A or in field distributor), the additional function includes the following functions:
  - Motor protection function via indirect TH analysis via the direction of rotation terminals
  - Rapid start and stop function

"Motor protection function using TF analysis" subfunction

This function is only active in bus operation. This additional function causes a tripping of fault 84, "Motor overtemperature".

The fault is tripped when all of the following conditions are met:

- The standard MOVIMOT® motor protection function is deactivated via DIP switch S1/5 = ON.
- The terminals for direction of rotation are wired to 24 V via a TH as shown in the following illustration.

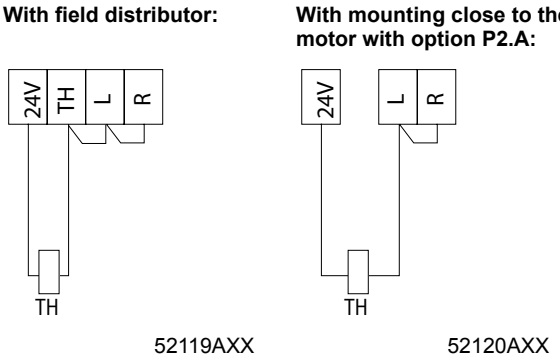

- The TH tripped due to excessive heat in the motor (enable for both terminals for the direction of rotation is revoked).
- Supply voltage is present.

	NOTE
	The "Motor protection function using TH analysis" can be deactivated by setting the DIP switch S1/5 = OFF. In this case, the motor protection in the MOVIMOT® that is implemented via a motor model is in effect.

"Rapid start" subfunction

Regardless of whether the MOVIMOT® is controlled in terminal or bus operation, the pre-magnetization time is set to 0 s. This means that pre-magnetization does not occur at the beginning of the enable in order to start accelerating at the setpoint ramp as quickly as possible.

"Rapid stop" subfunction

The function, "Brake applied at downward ramp" is introduced in bus operation. Bit 9 is assigned with this function as a virtual terminal in the control word.

15	14	13	12	11	10	9	8	7	6	5	4	3	2	1	0
Not assigned[1]						**Bit "9"**	Bit "8"	Not assigned[1]	"1" = Reset	Not assigned[1]			"1 1 0" = Enable Otherwise stop		

Brake can be released without enable

Virtual terminals for "Brake applied at downward ramp"

1) Recommendation for all unassigned bits = "0"

As soon as bit 9 is set during the downwards ramp, the MOVIMOT® unit applies the brake directly (brake control through the MOVIMOT®) or through the MOVIMOT® signal relay output (brake control through the relay output) and inhibits the output stage.

If the motor frequency is less than the stop frequency (3 Hz), the brake is applied at the downwards ramp regardless of the status of bit 9.

"Brake control in bus operation" flowchart:

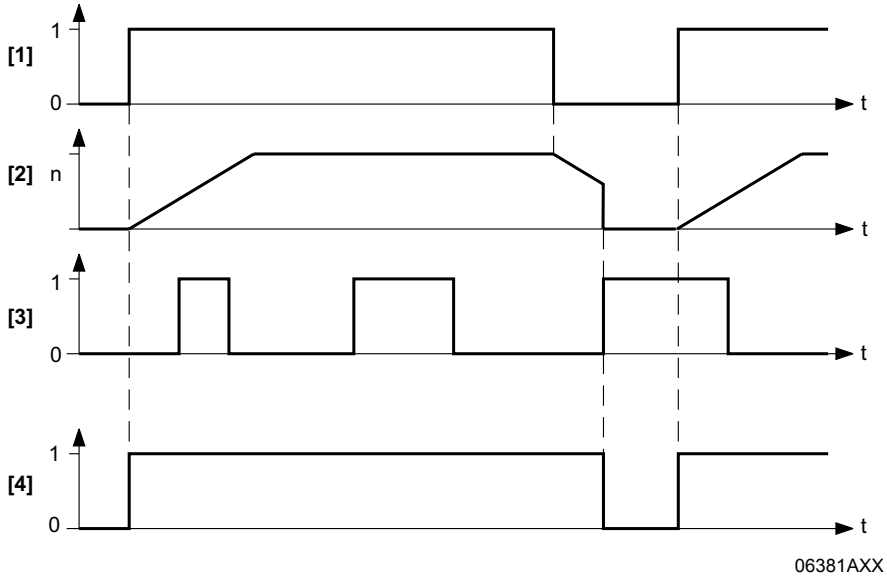

[1] Enable terminals/control word
[2] Speed
[3] Bit 9
[4] Brake control signal: 1= open, 0 = closed

	NOTE
	In terminal operation, the rapid stop function using control word bit 9 is not available.

Functionality of the signal relay

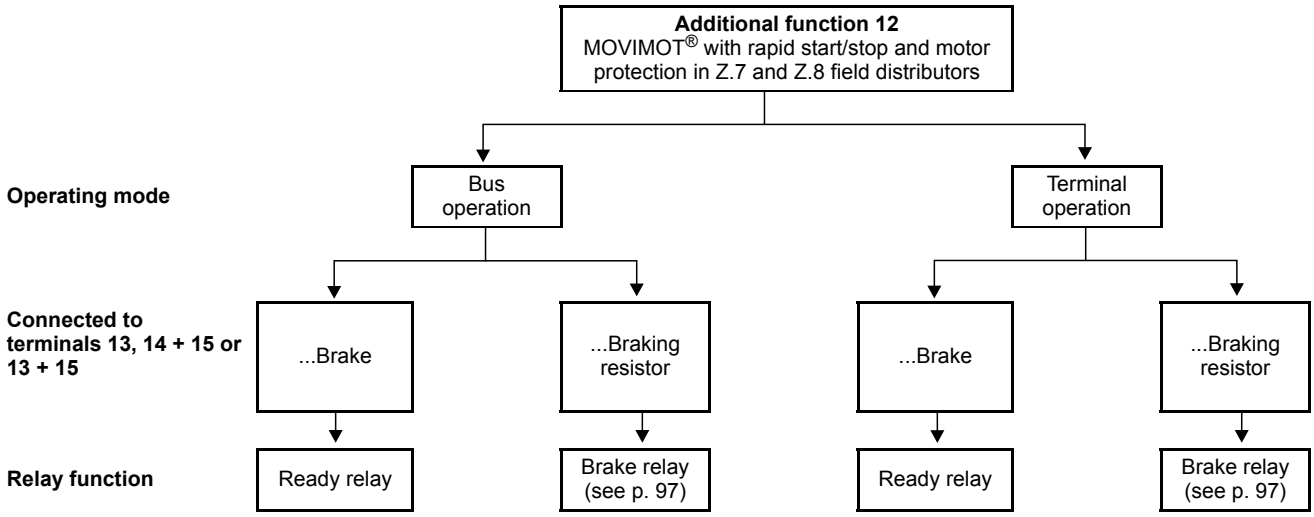

- If an external braking resistor is connected to the terminals, relay K1 functions as a brake control relay. This means that the ready signal function is no longer available.

  It is imperative that you observe the section "Use of relay output with additional functions 7, 9, 12, and 13", starting on page 97.

DANGER

If DIP switches S2/5 to S2/8 are set incorrectly, the brake can release.

If the section "Use of relay output with additional functions 7, 9, 12, and 13" is not observed, a crushing risk could arise through unintentional starting of the drive.

Severe or fatal injuries.

- Observe the note in the section "Use of relay output with additional functions 7, 9, 12, and 13", starting on page 97.

Additional function 13

MOVIMOT® with extended speed monitoring

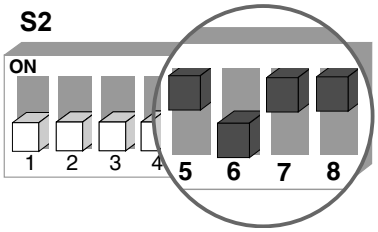

58613AXX

DANGER

Risk of fatal injury if the hoist falls.

Severe or fatal injuries or damage to property.

- MOVIMOT® is not designed for use as a safety device in hoist applications. Use monitoring systems or mechanical protection devices as safety equipment.

Prerequisites

STOP

MOVIMOT® can only be used in hoist applications if the following prerequisites are met:

- Additional function 13 can only be used with brake motors.
- Ensure that the DIP switch S2/3 =OFF (VFC operation).
- The use of the BGM brake controller in connection with an external braking resistor is imperative (beginning at page 97).

- If an external braking resistor is connected to the terminals, relay K1 functions as a brake control relay. This means that the ready signal function is no longer available.

DANGER

If DIP switches S2/5 to S2/8 are set incorrectly, the brake can release.

If the section "Use of relay output with additional functions 7, 9, 12, and 13" is not observed, a crushing risk could arise through unintentional starting of the drive.

Severe or fatal injuries.

- Observe the note in the section "Use of relay output with additional functions 7, 9, 12, and 13", starting on page 97.

Functional description

The additional function 13 comprises the following functions:

- Additional function 9, MOVIMOT® for hoisting applications
- Speed monitoring with adjustable monitoring time

After additional function 13 is activated, speed monitoring is always on, regardless of the setting of DIP switch S2/4.

After additional function 13 is activated, DIP switch S2/4 serves the following functions, depending on the RS-485 address that is set:

Terminal operation

The RS-485 address set on DIP switches S1/1 to S1/4 is 0.

- S2/4 = OFF
  - Speed monitoring time 2 is set on switch t1.
  - Speed monitoring times 1 and 3 are fixed at 1 s.
  - The ramp time is fixed at 1 s.
  - Set point f2 is set on switch f2.
- S2/4 = ON
  - Speed monitoring time 2 is set on switch f2.
  - Speed monitoring times 1 and 3 are fixed at 1 s.
  - The setpoint is fixed at 5 Hz.
  - The ramp time is set on switch t1.

Bus operation

The RS-485 address set on DIP switches S1/1 to S1/4 is not equal to 0.

- S2/4 = OFF
  - Speed monitoring time 2 is set on switch t1.
  - Speed monitoring time 1 and 3 are set on switch f2
  - The ramp time is fixed at 1 s.
  - The minimum frequency is fixed at 2 Hz.
- S2/4 = ON
  - Speed monitoring time 2 is set on switch f2.
  - Speed monitoring times 1 and 3 are fixed at 1 s.
  - The ramp time is set on switch t1.
  - The minimum frequency is fixed at 2 Hz.

Setting options for additional function 13

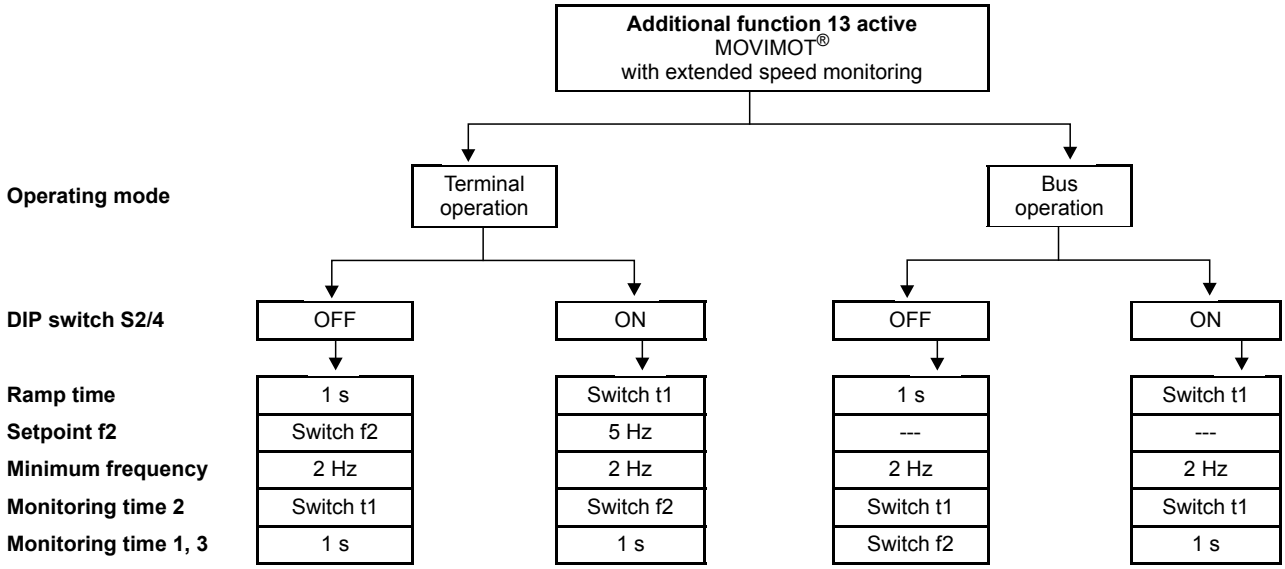

Setting the speed monitoring times

When additional function 13 is active, the following values may be set as monitoring times on switches t1 and f2:

Switch t1 or f2 (see above)											
Detent position	0	1	2	3	4	5	6	7	8	9	10
Monitoring time 2 [s]	0.1	0.2	0.3	0.4	0.5	0.6	0.7	0.8	0.9	1.0	1.5
Monitoring time 1 and 3 [s]	0.1	0.2	0.3	0.4	0.5	0.6	0.7	0.8	0.9	1.0	1.5

Validity of the speed monitoring times

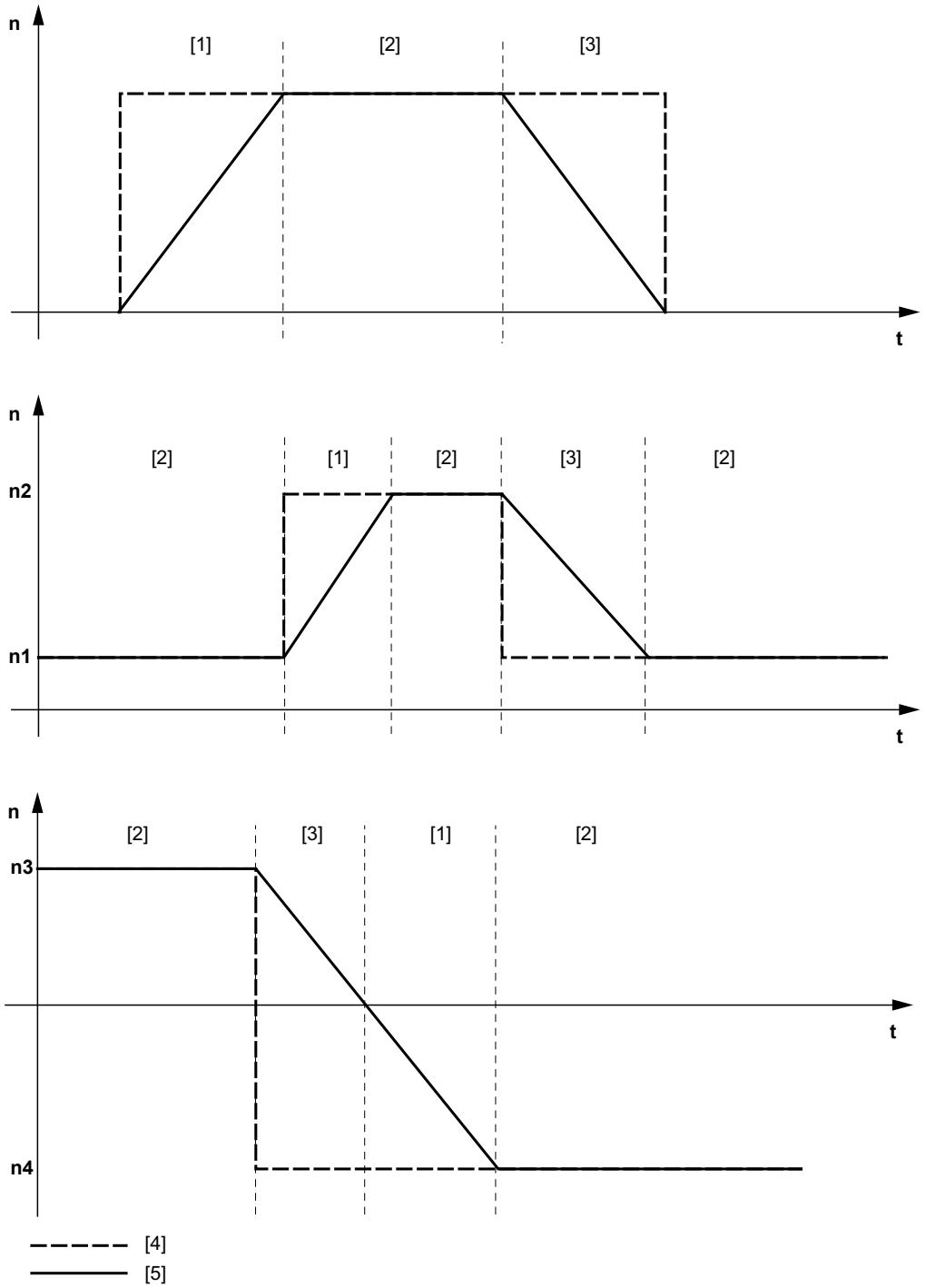

[1] Validity range: speed monitoring time 1
[2] Validity range: speed monitoring time 2
[3] Validity range: speed monitoring time 3
[4] Speed setpoint
[5] Speed output (actual value)

Monitoring time 1 is valid when the actual speed increases after a setpoint change.

The field of application of monitoring time 2 begins when the setpoint is reached.

The field of application of monitoring time 3 is valid when the actual speed decreases after a setpoint change.

Additional function 14

MOVIMOT® with deactivated slip compensation

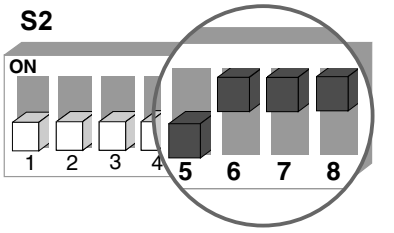

59638AXX

Functional description

Slip compensation is deactivated.

Deactivating slip compensation can reduce the speed accuracy of the motor.

Use of the relay output with additional functions 7, 9, 12 and 13

DANGER

Risk of crushing if the drive starts up unintentionally.

Severe or fatal injuries.

Observe the following before startup with BGM brake control:

- The brake coil must correspond with the supply voltage (e. g. 400 V).
- One of the additional functions 7, 9, 12 or 13 must be activated; otherwise, the brake is released permanently. This should also be observed when the MOVIMOT® inverter is exchanged.

  If none of the functions named is activated, the K1 relay contact operates as a ready relay contact. This means that the brake is released without enable when using the BGM, if it was connected without permission.

The following illustration shows the use of relay contact K1 to control the mechanical brake with the BGM brake rectifier.

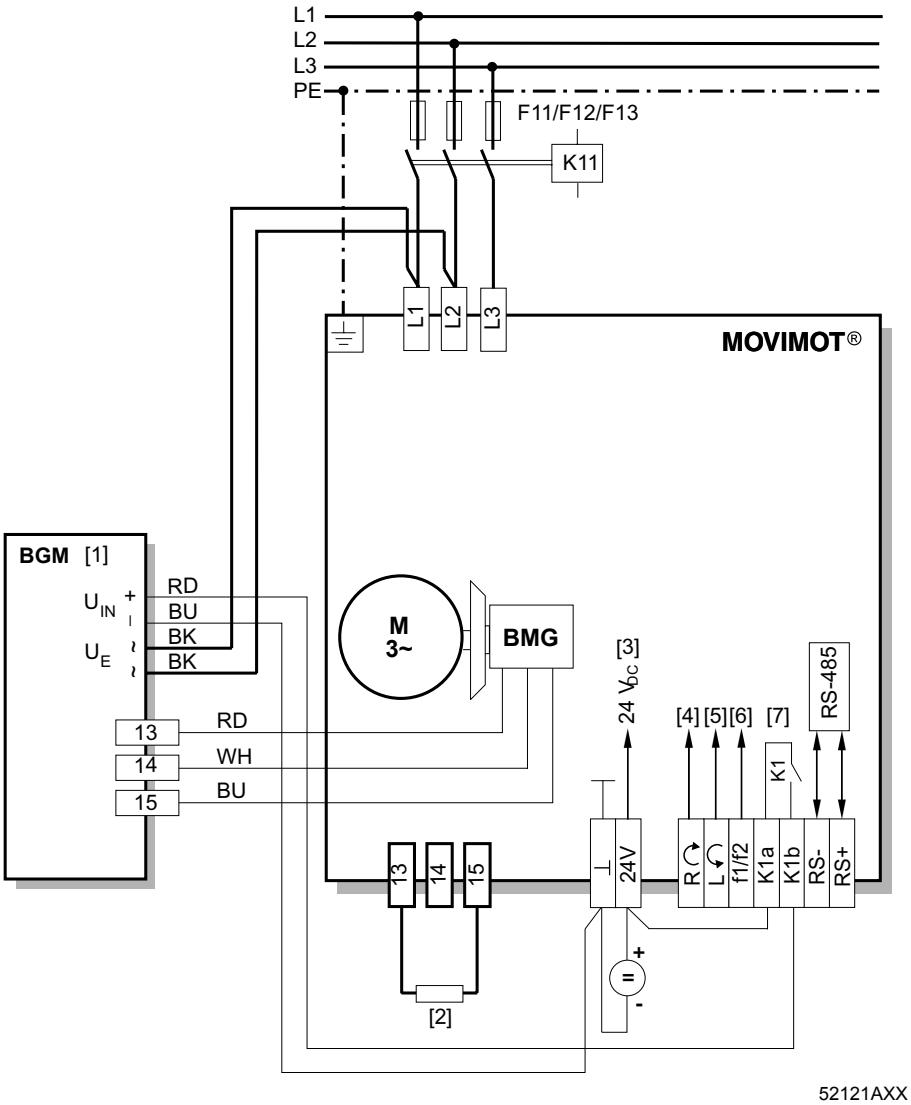

[1] BGM brake control mounted in the terminal box
[2] BW external braking resistor (assignment, see section "Technical data").
[3] DC 24 V supply
[4] CW/stop
[5] CCW/stop
Observe the enabled direction of rotation (see section "Connection of MOVIMOT® basic unit", Functions of the CW/stop and CCW/stop terminals with control via RS-485 interface)
[6] Setpoint switch mode f1/f2
[7] Brake relay

Retrofitting the brake rectifier

If the BGM brake rectifier was not ordered as an installed option, it must be retrofitted as follows:

STOP	**STOP** The installation of this option is only approved in combination with the modular terminal box. The following shows a sample assembly. The installation, in general, depends on the terminal box employed and, if applicable, the other options which are installed.

1. Exchange the brake coil (brake coil must correspond with the supply voltage).
2. Mount the BGM brake control with 2 screws according to the following illustration (connection according to wiring diagram on page 98).

   (Tightening torque 2.0 Nm / 18 lb.in)

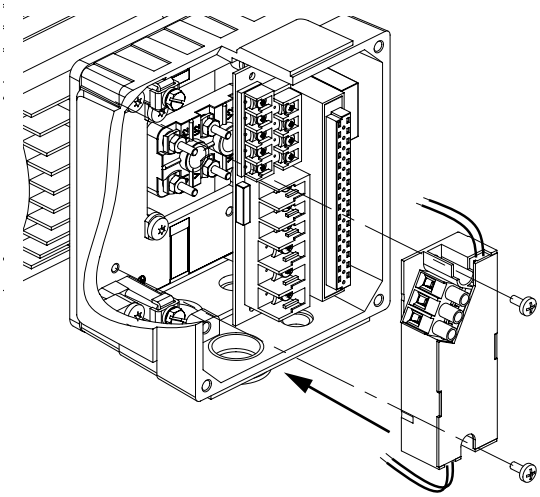

52122AXX

3. Connect the external braking resistor according to the wiring diagram on page 98 (assignment, see section "Technical data").

- Relay K1 functions as a brake control relay. This means that the ready signal function is no longer available.

  It is imperative that you observe the section "Use of relay output with additional functions 7, 9, 12, and 13", starting on page 97.

	DANGER If DIP switches S2/5 to S2/8 are set incorrectly, the brake can release. If the section "Use of relay output with additional functions 7, 9, 12, and 13" is not observed, a crushing risk could arise through unintentional starting of the drive. Severe or fatal injuries. • Observe the note in the section "Use of relay output with additional functions 7, 9, 12, and 13", starting on page 97.

8.6 Startup with binary control (control via terminals)

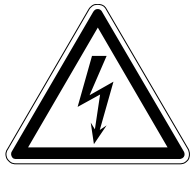

DANGER

When working on the unit, dangerous voltage levels may still be present up to one minute after the mains is disconnected.

Severe or fatal injuries from electric shock.

- Disconnect the MOVIMOT® inverter from the mains and secure it against unintentional reconnection to the voltage supply.
- Then wait at least one minute.

1. **Check that the MOVIMOT® is correctly connected (see section "Electrical Installation for MOVIMOT® Standard Version").**

2. Make sure DIP switches S1/1 – S1/4 are set to OFF (= address 0).
   E.g. MOVIMOT® is binarily controlled via the terminals.

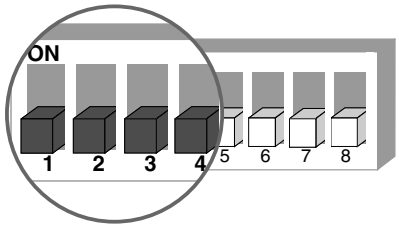

05062AXX

3. Set the first speed with setpoint potentiometer f1 (active if terminal f1/f2 = 0, (factory setting: approx. 50 Hz).

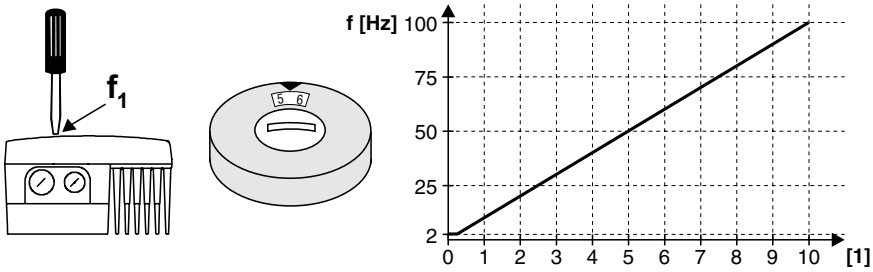

60799AXX

[1] Potentiometer setting

4. Ensure the screw plug has a seal and reinstall it in the f1 setpoint potentiometer.

STOP

The enclosure specified in the technical data only applies when the screw plug of the setpoint potentiometer is correctly mounted.

When the screw plug is not installed or is incorrectly mounted, the MOVIMOT® inverter can be damaged.

5. Set the second speed with switch f2 (active when terminal f1/f2 = "1").

Switch f2											
Detent position	0	1	2	3	4	5	6	7	8	9	10
Setpoint f2 [Hz]	5	7	10	15	20	25	35	50	60	70	100

NOTE

During operation, the first speed is infinitely variable using the setpoint potentiometer f1, which is accessible from outside.

Speeds f1 and f2 can be set independently of each other.

6. Set the ramp time with switch t1 (ramp times in relation to a setpoint step change of 50 Hz).

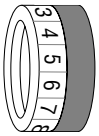

Switch t1											
Detent position	0	1	2	3	4	5	6	7	8	9	10
Ramp time t1 [s]	0.1	0.2	0.3	0.5	0.7	1	2	3	5	7	10

7. Set the MOVIMOT® inverter on the terminal box and screw it on.

8. Switch on the DC 24 V control voltage and mains.

Inverter behavior according to the terminal level

Inverter Behavior	Mains	24 V	f1/f2	CW/stop	CCW/stop	Status LED
Inverter off	0	0	x	x	x	Off
Inverter off	1	0	x	x	x	Off
Stop, mains missing	0	1	x	x	x	Flashing yellow
Stop	1	1	x	0	0	Yellow
CW operation with f1	1	1	0	1	0	Green
CCW operation with f1	1	1	0	0	1	Green
CW operation with f2	1	1	1	1	0	Green
CCW operation with f2	1	1	1	0	1	Green
Stop	1	1	x	1	1	Yellow

Key

0 = No voltage

1 = Voltage

x = any

8.7 Startup with options MBG11A or MLG11A

DANGER

When working on the unit, dangerous voltage levels may still be present up to one minute after the mains is disconnected.

Severe or fatal injuries from electric shock.

- Disconnect the MOVIMOT® inverter from the mains and secure it against unintentional reconnection to the voltage supply.
- Then wait at least one minute.

1. **Check that the MOVIMOT® is correctly connected (see section "Electrical Installation for MOVIMOT® Standard Version").**

2. Set DIP switch S1/1 (on MOVIMOT) to ON (= address 1).

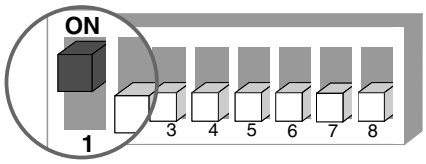

05064AXX

3. Set the minimum frequency f_{min} with switch f2

Switch f2											
Detent position	0	1	2	3	4	5	6	7	8	9	10
Minimum frequency f_{min} [Hz]	2	5	7	10	12	15	20	25	30	35	40

4. Set the ramp time with switch t1 (ramp times in relation to a setpoint step change of 50 Hz).

Switch t1											
Detent position	0	1	2	3	4	5	6	7	8	9	10
Ramp time t1 [s]	0.1	0.2	0.3	0.5	0.7	1	2	3	5	7	10

5. Check to see if the necessary direction of rotation has been enabled.

Terminal R	Terminal L	Meaning
Activated	Activated	• Both directions of rotation are enabled
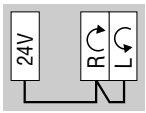		
Activated	Not activated	• Only CW operation enabled • Pre-selected setpoints for CCW operation result in a stand-still of drive.
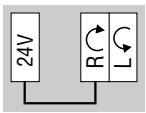		

Terminal R	Terminal L	Meaning
Not activated	Activated	• Only CCW operation enabled • Pre-selected setpoints for CW operation result in standstill of drive
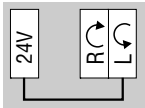		
Not activated	Not activated	• Unit is inhibited or drive is brought to a stop
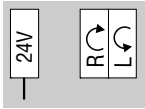		

6. Set the MOVIMOT® inverter on the terminal box and screw it on.

7. Use setpoint potentiometer f1 to set required maximum speed.

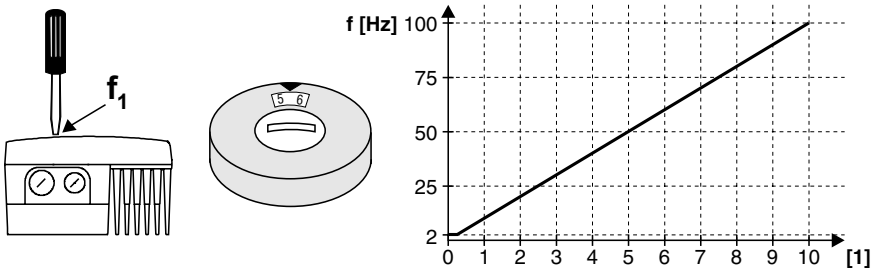

60799AXX

[1] Potentiometer setting

8. Ensure the screw plug has a seal and reinstall it in the f1 setpoint potentiometer.

STOP	**STOP** The enclosure specified in the technical data only applies when the screw plug of the setpoint potentiometer is correctly mounted. When the screw plug is not installed or is incorrectly mounted, the MOVIMOT® inverter can be damaged.

9. Connect voltage supply.

i	**NOTE** For notes on operation with the MBG11A or MLG11A options, refer to page 152.

8.8 Startup with MWA21A option (speed control module)

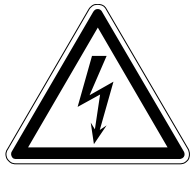

DANGER

When working on the unit, dangerous voltage levels may still be present up to one minute after the mains is disconnected.

Severe or fatal injuries from electric shock.

- Disconnect the MOVIMOT® inverter from the mains and secure it against unintentional reconnection to the voltage supply.
- Then wait at least one minute.

1. **Check that the MOVIMOT® is correctly connected (see section "Electrical Installation for MOVIMOT® Standard Version").**

2. Set DIP switch S1/1 (on MOVIMOT) to ON (= address 1).

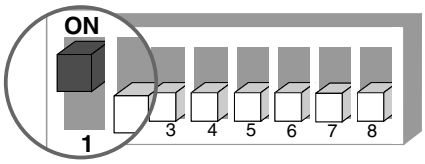

05064AXX

3. Set the minimum frequency f_{min} with switch f2

Switch f2											
Detent position	0	1	2	3	4	5	6	7	8	9	10
Minimum frequency f_{min} [Hz]	2	5	7	10	12	15	20	25	30	35	40

4. Set the ramp time with switch t1 (ramp times in relation to a setpoint step change of 50 Hz).

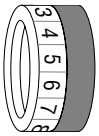

Switch t1											
Detent position	0	1	2	3	4	5	6	7	8	9	10
Ramp time t1 [s]	0.1	0.2	0.3	0.5	0.7	1	2	3	5	7	10

5. Check to see if the necessary direction of rotation has been enabled.

Terminal R	Terminal L	Meaning
Activated	Activated	• Both directions of rotation are enabled
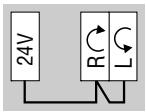		
Activated	Not activated	• Only CW operation enabled • Pre-selected setpoints for CCW operation result in a standstill of drive.
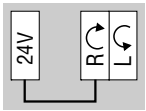		
Not activated	Activated	• Only CCW operation enabled • Pre-selected setpoints for CW operation result in standstill of drive
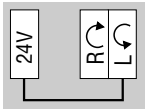		
Not activated	Not activated	• Unit is inhibited or drive is brought to a stop
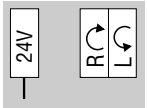		

6. Set the MOVIMOT® inverter on the terminal box and screw it on.

7. Use setpoint potentiometer f1 to set required maximum speed.

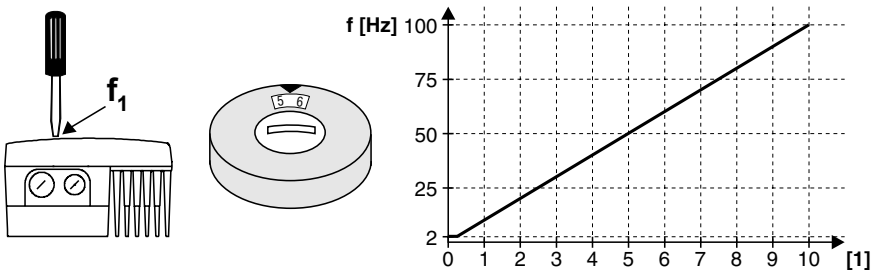

60799AXX

(1) Potentiometer setting

8. Ensure the screw plug has a seal and reinstall it in the f1 setpoint potentiometer.

STOP	**STOP** The enclosure specified in the technical data only applies when the screw plug of the setpoint potentiometer is correctly mounted. When the screw plug is not installed or is incorrectly mounted, the MOVIMOT® inverter can be damaged.

9. Select the signal type for the analog input (tl. 7 and tl. 8) of the MWA21A option using switches S1 and S2.

	S1	S2	setpoint stop function
V signal 0 – 10 V	OFF	OFF	No
I signal 0 – 20 mA	ON	OFF	
I signal 4 – 20 mA	ON	ON	Yes
V signal 2 – 10 V	OFF	ON	

10. Connect voltage supply.

11. Enable MOVIMOT® by applying +24 V to tl. 4 (CW rotation) or tl. 5 (CCW rotation) of the MWA21A.

	NOTE
	For notes on operating the MWA21A option, refer to page 153.

8.9 Startup with external AS-interface binary slave MLK11A

	DANGER When working on the unit, dangerous voltage levels may still be present up to one minute after the mains is disconnected. Severe or fatal injuries from electric shock. • Disconnect the MOVIMOT® inverter from the mains and secure it against unintentional reconnection to the voltage supply. • Then wait at least one minute.

1. **Check that the MOVIMOT® is correctly connected (see section "Electrical Installation for MOVIMOT® Standard Version").**

2. Make sure DIP switches S1/1 – S1/4 are set to OFF (= address 0).

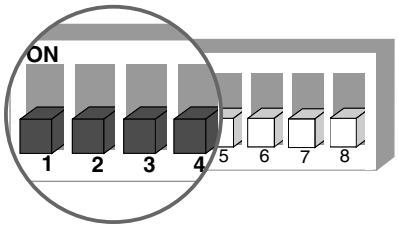

05062AXX

3. Set the first speed with setpoint potentiometer f1 (active if terminal f1/f2 = 0, (factory setting: approx. 50 Hz).

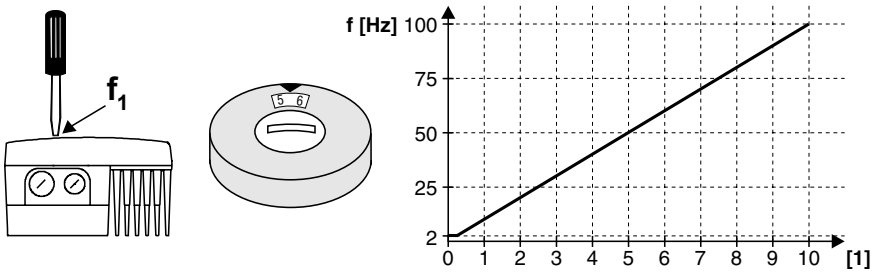

60799AXX

[1] Potentiometer setting

4. Ensure the screw plug has a seal and reinstall it in the f1 setpoint potentiometer.

	STOP The enclosure specified in the technical data only applies when the screw plug of the setpoint potentiometer is correctly mounted. When the screw plug is not installed or is incorrectly mounted, the MOVIMOT® inverter can be damaged.

5. Set the second speed with switch f2 (active when terminal f1/f2 = "1").

Switch f2											
Detent position	0	1	2	3	4	5	6	7	8	9	10
Setpoint f2 [Hz]	5	7	10	15	20	25	35	50	60	70	100

NOTE

During operation, the first speed is infinitely variable using the setpoint potentiometer f1, which is accessible from outside.

Speeds f1 and f2 can be set independently of each other.

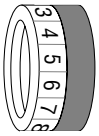

6. Set the ramp time with switch t1 (ramp times in relation to a setpoint step change of 50 Hz).

Switch t1											
Detent position	0	1	2	3	4	5	6	7	8	9	10
Ramp time t1 [s]	0.1	0.2	0.3	0.5	0.7	1	2	3	5	7	10

7. Set the MOVIMOT® inverter on the terminal box and screw it on.

8. Connect AS-interface supply voltage and the mains.

Data AS-interface master Æ MLK11A

The following table shows the 4 data bits that are transmitted from the AS-interface master to the MLK11A using the AS-interface:

Bit	Function	Display / LED color
D0	Clockwise (terminal R)	DO 0 / yellow
D1	Counterclockwise (terminal L)	DO 1 / yellow
D2	Speed f1 / speed f2 (terminal f1/ f2)	DO 2 / yellow
D3	Voltage supply / reset (terminal 24 V)	DO3 / green

Data MLK11A Æ AS-interface master

The following table shows the 4 data bits that are returned from the MLK11A to the AS-interface master via the AS-interface:

Bit	Function	Display / LED color
D0	Ready signal (relay K1)	DI 0 / yellow
D1	–	–
D2	Sensor 1 (M12 socket, pin 4)	DI 2 / yellow
D3	Sensor 2 (M12 socket, pin 2)	DI 3 / yellow

LED display

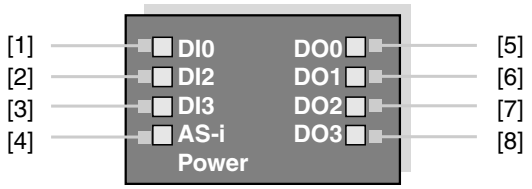

05070BXX

[1] MOVIMOT® ready
[2] External input DI2
[3] External input DI3
[4]Voltage supply via AS-interface network ok
[5] Clockwise rotation active
[6] Counterclockwise rotation active
[7] Speed f2 active
[8] MOVIMOT® voltage supply

Assigning the slave address using a hand-held programming device

It is possible to use an AS-interface hand-held programming device to assign the slave address. This allows simple and network-independent addressing.

The AS-interface hand-held programming devices offer the following functions:

- Reading and changing an AS-interface slave address
- Reading the AS-interface profile
- Reading and changing the data bits

The use of a hand-held programming device requires a connection cable that fits onto the M12 plug connector of the MLK11A (see the following illustration).

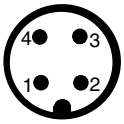

1: AS-Interface +
2: N.C
3: AS-Interface -
4: N.C

59043AXX

Example: Each AS-interface station is individually addressed (A) and reintegrated in the AS-interface network (B).

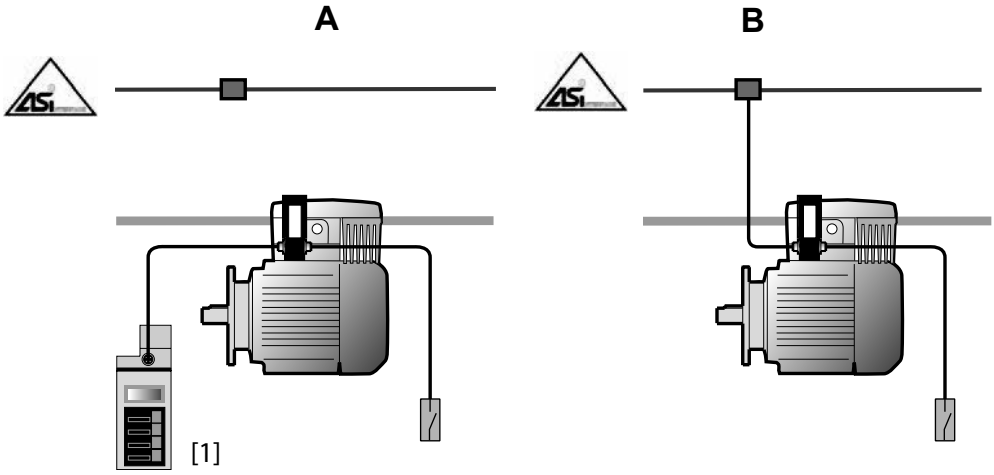

52308AXX

[1] AS-interface hand-held programming device

8.10 Supplementary notes for installation close to the motor

When the MOVIMOT® inverter with option P2.A is installed close to the motor, observe the following notes:

Check the connection type for the connected motor

Use the following illustration to check that the selected connection type of the MOVIMOT® matches the connected motor.

03636AXX

Important: For brake motors: do not install brake rectifiers inside the terminal box of the motor.

Motor protection and direction of rotation enable

The connected motor must be equipped with a TH.

- If control is carried out via RS-485, the TH must be wired as follows:

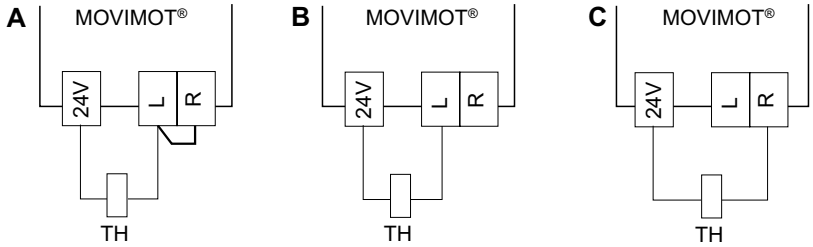

52257AXX

[A] Both directions of rotation are enabled
[B] Only **CCW** direction of rotation is enabled
[C] Only **CW** direction of rotation is enabled

- For control via binary signals, we recommend that you connect the TH in series with the "Ready signal" relay (see the following illustration).
  - The ready signal must be monitored by an external controller.
  - As soon as the ready signal is no longer applied, the drive must be switched off (terminals R and L = "0").

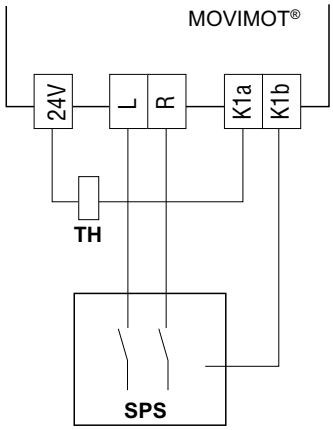

52253AXX

DIP switch

When the MOVIMOT® inverter is installed close to the motor, the DIP switch S1/5 must be changed from the factory setting to ON:

S1	**1**	**2**	**3**	**4**	**5**	**6**	**7**	**8**
Meaning	**RS-485 address**				**Motor protection**	**Motor power increment**	**PWM frequency**	**No-load damping**
	2^0	2^1	2^2	2^3				
ON	1	1	1	1	**Off**	Motor one rating smaller	Variable (16, 8, 4 kHz)	On
OFF	**0**	**0**	**0**	**0**	On	**Adapted**	**4kHz**	**Off**

Braking resistor

- An internal braking resistor (BW1 or BW2) must be connected to the MOVIMOT® with motors without brake.

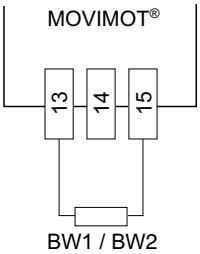

06487AXX

- **With brake motors, no braking resistor may be connected to the MOVIMOT®.**

Mounting the MOVIMOT® inverter in the field distributor

Follow the instructions in the corresponding manuals when mounting the MOVIMOT® inverter close to the motor in the field distributor.

- PROFIBUS Interfaces, Field Distributors
- InterBus Interfaces, Field Distributors
- DeviceNet/CANopen Interfaces, Field Distributors
- AS-interface Interfaces, AS-interface Field Distributors

9 Startup: MOVIMOT® with Integrated AS-Interface

9.1 Important startup instructions

	DANGER You must disconnect the MOVIMOT® inverter from the mains before removal/installation. Dangerous voltages may still be present for up to one minute after disconnection from the mains. Severe or fatal injuries from electric shock • Disconnect the MOVIMOT® inverter from the mains and secure it against unintentional reconnection to the voltage supply. • Then wait at least one minute.

	WARNING The surface temperature of the MOVIMOT® and the external options, for example, the braking resistor (in particular the heat sink), can reach high temperatures during operation. Burn risk • Only touch the MOVIMOT® drive and the external options when they have sufficiently cooled.

	NOTES • Before startup, remove the paint protection cap from the status LED. • Before startup, remove the paint protection film from the nameplate. • Check that all protective covers are installed correctly. • Set the "CW/stop" or "CCW/stop" signals for jog mode. • Observe a minimum switch-off time of 2 seconds for the mains contactor K11.

9.2 Description of the controls

Setpoint potentiometer f1

The setpoint f1 is set using the potentiometer.

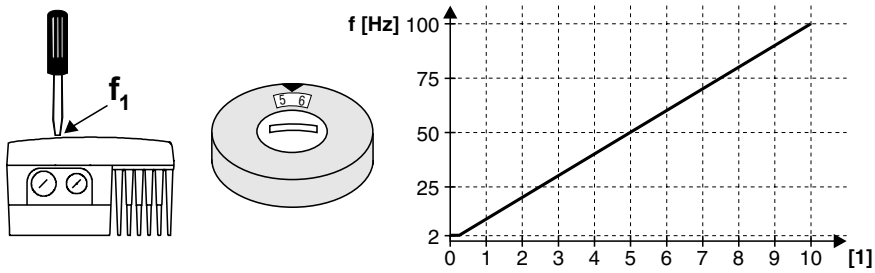

60799AXX

[1] Potentiometer setting

STOP	**STOP** The enclosure specified in the technical data only applies when the screw plug of the setpoint potentiometer is correctly mounted. When the screw plug is not installed or is incorrectly mounted, the MOVIMOT® inverter can be damaged. • Rescrew the screw plug of the f1 setpoint potentiometer (with seal).

Setpoint f1 is selected via the AS-interface bit "Speed f1/speed f/2":

Setpoint switch f2

Setpoint f2 is set using the switch:

Switch f2											
Detent position	**0**	1	2	3	4	5	6	7	8	9	10
Setpoint f2 [Hz]	**5**	7	10	15	20	25	35	50	60	70	100

Setpoint f2 is selected via the AS-interface bit "Speed f1/speed f/2":

Switch t1

For integrator ramp (ramp times in relation to a setpoint step change of 50 Hz)

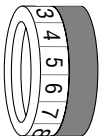

Switch t1											
Detent position	0	1	2	3	4	**5**	6	7	8	9	10
Ramp time t1 [s]	0.1	0.2	0.3	0.5	0.7	**1**	2	3	5	7	10

DIP switches S3 and S4

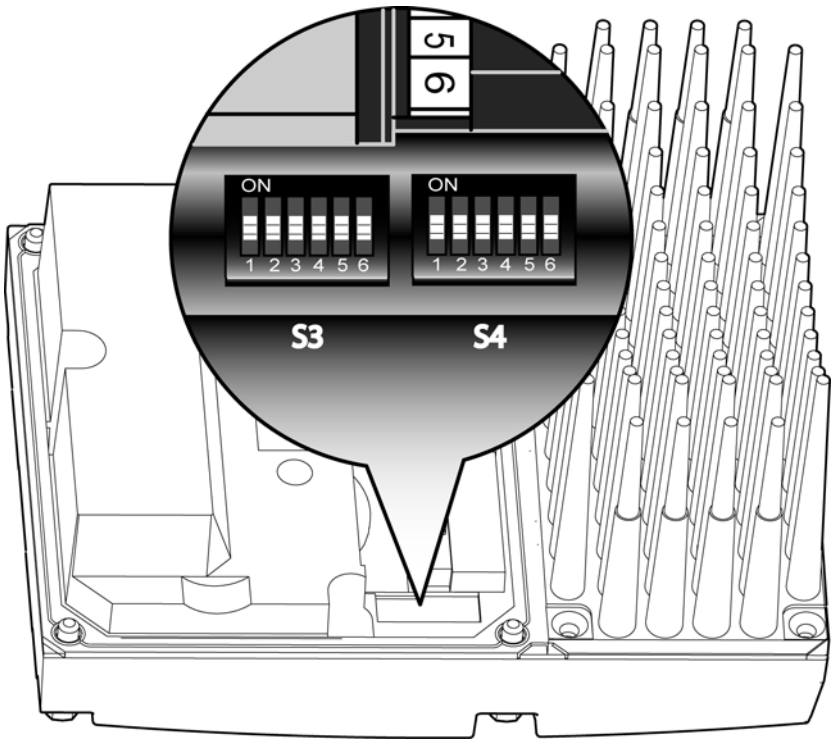

51858AXX

DIP switch S3:

S3 Meaning	1 Motor protection	2 Motor power increment	3 PWM frequency	4 No-load damping	5 Motor type	6 Brake released without enable
ON	Off	Motor one rating smaller	Variable (16, 8, 4 kHz)	On	SEW-DZ motor[1)]	On
OFF	**On**	**Adapted**	**4 kHz**	**Off**	**IEC motor**	**Off**

1) Only available in Brazil

DIP switch S4:

S4 Meaning	1 Control process	2 Speed monitoring	3	4	5	6
			Additional functions			
			2^0	2^1	2^2	2^3
ON	V/f	On	1	1	1	1
OFF	**VFC**	**Off**	**0**	**0**	**0**	**0**

STOP	**STOP** Move the DIP switch only with suitable tools; e.g., slotted screwdrivers with a blade width < 3 mm. The force with which you move the DIP switch may not exceed the maximum of 5 N.

9.3 Description of the DIP switches S3

DIP switch S3/1 **Motor protection switched on or switched off**

- When the MOVIMOT® inverter is installed close to the motor (with option P2.A or in field distributor), the motor protection must be deactivated.
- To ensure motor protection, a TH (bimetallic thermostat) must be installed.

DIP switch S3/2 **Lower motor power increment**

- When activated, this DIP switch enables the MOVIMOT® to be assigned to a motor with a lower motor rating. The rated unit power is not affected.
- When a motor with a lower power is used, the overload capacity of the drive can be increased because from the perspective of the motor, the MOVIMOT® is one power increment too big. A higher current can be provided briefly, leading to higher torque ratings.
- The objective of switch S3/2 is to achieve short-term utilization of the motor's peak torque. The current limit of the respective unit remains the same regardless of the switch position. The motor protection function is adjusted depending on the switch position.
- **Stall protection for the motor is not possible in this operating mode when S3/2 = "ON".**

MOVIMOT® Inverter	Assigned motor			
	S3/2 = OFF		S3/2 = ON	
	W	m	W	m
MM03	DT71D4	DR63L4[1)]	DR63L4[1)]	–
MM05	DT80K4	DT71D4	DT71D4	DFR63L4[1)]
MM07	DT80N4	DT80K4	DT80K4	DT71D4
MM11	DT90S4	DT80N4	DT80N4	DT80K4
MM15	DT90L4	DT90S4	DT90S4	DT80N4
MM22	DV100M4	DT90L4	DT90L4	DT90S4
MM30	DV100L4	DV100M4	DV100M4	DT90L4
MM3X	–	DV100L4	DV100L4	DV100M4

1) Only possible when installed close to the motor

DIP switch S3/3 **Setting the maximum PWM frequency**

- When DIP-SWITCH S3/3 = OFF, the MOVIMOT® operates with a 4 kHz PWM frequency.
- When DIP SWITCH S3/3 = ON, the MOVIMOT® operates with a 16 kHz PWM frequency (low noise) and switches back in steps to lower switching frequencies depending on the heat sink temperature.

DIP switch S3/4 **No-load damping function (S3/4 = ON)**

The function prevents resonance vibrations during activation in no-load operation.

DIP switch S3/5

Motor type

- For IEC and NEMA motors, the DIP switch S3/5 must always be set to OFF.
- For DZ motors with rated voltages of 220/380V and 60 Hz (only available in Brazil), the DIP switch S3/5 must always be set to ON.

DIP switch S3/6

Releasing the brake without enable

When switch S3/6 = "ON", it is possible to release the brake even when there is no drive enable.

Operation with braking resistor

The additional function is not effective during operation with a braking resistor.

Release brake

The brake can be released by setting the AS-interface bit "Speed f1/Speed f2", and the following conditions must be met:

State of the AS-interface bits			Enable status	Fault status	Brake function
D0 (R)	**D1 (L)**	**D2 (f1/f2)**			
"1" "0"	"0" "1"	"0"	Unit enabled	No unit fault	Brake is controlled by the MOVIMOT®, setpoint f1
"1" "0"	"0" "1"	"1"	Unit enabled	No unit fault	Brake is controlled by the MOVIMOT®, setpoint f2
"1" "0"	"1" "0"	"0"	Unit is not enabled	No unit fault	Brake applied
"1"	"1"	"1"	Unit is not enabled	No unit fault	Brake applied
"0"	"0"	**"1"**	**Unit is not enabled**	**No unit fault**	**Brake released for manual movement**
All statuses possible			Unit is not enabled	Unit fault	Brake applied

NOTE

To be able to release the brake without enabling the drive, you must set the bit D3 (reset/controller enable).

Setpoint selection

Setpoint selection depending on the AS-interface bit "Speed f1/Speed f2":

Enable status	AS-interface bit	Active setpoint
Unit enabled	D2 = "0"	Setpoint potentiometer f1 active
Unit enabled	D2 = "1"	Setpoint potentiometer f2 active

Behavior if unit not ready

When a unit is not ready for operation, the brake is always applied, regardless of the position of the AS-interface bit "Speed f1/Speed f2."

LED display

The yellow LED display flashes periodically at a fast rate (t_{on} : t_{off} = 100 ms : 300 ms) when the brake was released for manual movement.

9.4 Description of the DIP switches S4

DIP switch S4/1

Control process

- DIP switch S4/1 = OFF: VFC operation for 4-pole motors
- DIP switch S4/1 = ON: V/f operation reserved for special cases

DIP switch S4/2

Speed monitoring

- Speed monitoring (S24 = "ON") is used for protecting the drive in case of a blockage.
- If the drive is operated at the current limit for more than 1 second when speed monitoring is active (S4/2 = "ON"), speed monitoring is triggered. The MOVIMOT® signals a fault using the status LED (red, slow flashing, fault code 08). The current limit must be reached uninterrupted for the duration of the deceleration time before monitoring responds.

DIP switches S4/3 to S4/6

Additional functions

- Additional functions can be selected using binary coding of the DIP switches.
- The possible values can be set as follows:

Decimal value:	0	1	2	3	4	5	6	7	8	9	10	11	12	13	14	15
S4/3	–	X	–	X	–	X	–	X	–	X	–	X	–	X	–	X
S4/4	–	–	X	X	–	–	X	X	–	–	X	X	–	–	X	X
S4/5	–	–	–	–	X	X	X	X	–	–	–	–	X	X	X	X
S4/6	–	–	–	–	–	–	–	–	X	X	X	X	X	X	X	X

X = ON
– = OFF

- An overview of the additional functions that can be selected is given on page 118.

9.5 Additional functions for MM..C-503-30

Overview of the additional functions

Decimal value	Brief description	Limitations	See page
0	Basic functions, no additional function selected	–	–
1	MOVIMOT® with increased ramp times	–	Page 119
2	MOVIMOT® with adjustable current limitation (fault if exceeded)	–	Page 119
3	MOVIMOT® with adjustable current limitation (switchable using terminal f1/f2)	–	Page 120
4	**Not possible for MOVIMOT® with integrated AS-interface**		–
5	**Not possible for MOVIMOT® with integrated AS-interface**		–
6	MOVIMOT® with a maximum 8 kHz PWM frequency	–	Page 122
7	MOVIMOT® with rapid start/stop	**Rapid stop is not possible**	Page 122
8	MOVIMOT® with minimum frequency 0 Hz	–	Page 123
9	**Not possible for MOVIMOT® with integrated AS-interface**		–
10	MOVIMOT® with minimum frequency 0 Hz and reduced torque at low frequencies	–	Page 124
11	Monitoring of supply-phase fault deactivated	–	Page 125
12	**Not possible for MOVIMOT® with integrated AS-interface**		–
13	**Not possible for MOVIMOT® with integrated AS-interface**		–
14	MOVIMOT® with deactivated slip compensation	–	Page 125
15	Not assigned	–	–

Additional function 1

MOVIMOT® with increased ramp times

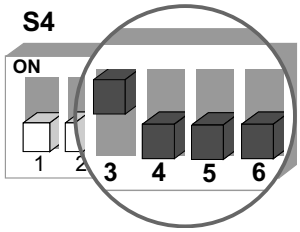

51859AXX

Functional description

- It is possible to set ramp times of up to 40 s.

Changed ramp times

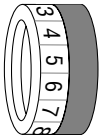

Switch t1											
Detent position	0	1	2	3	4	5	6	7	8	9	10
Ramp time t1 [s]	0.1	0.2	0.3	0.5	0.7	1	20	25	30	35	40

= Corresponds to standard setting

= Changed ramp times

Additional function 2

MOVIMOT® with adjustable current limitation (fault if exceeded)

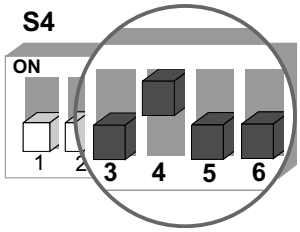

51860AXX

Functional description

- The current limitation can be set using switch f2.
- The setpoint f2 can no longer be changed and is set to the following fixed values:
  - Setpoint f2: 5 Hz
- The monitoring function is effective at 15 Hz and higher. If the drive operates at the current limit for longer than 500 ms, the unit generates a fault (fault 44). The fault is displayed by a red LED that flashes quickly.

Adjustable current limits

Switch f2											
Detent position	0	1	2	3	4	5	6	7	8	9	10
I_{max} [%] of I_N	90	95	100	105	110	115	120	130	140	150	160

Additional function 3

MOVIMOT® with adjustable current limitation (switchable using AS-interface bit "Speed f1/Speed f2"); the frequency is reduced when this value is exceeded

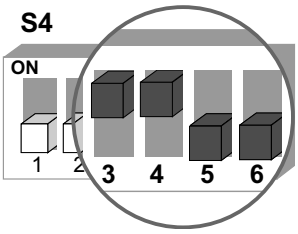

51861AXX

Functional description

The current limitation can be set using switch f2. The AS-interface bit "Speed f1/Speed f2" can be used to switch between the maximum current limit and the current limit set with switch f2.

Response when current limit is reached.

- When the current limit is reached, the unit reduces the frequency using the current limitation function and may stop the ramp to prevent a current increase.
- If the unit is at the current limitation, the status LED displays the status with rapid green flashing.

System-internal values for the setpoint f2/ minimum frequency

- The AS-interface bit "Speed f1/Speed f2" can no longer be used to switch between setpoint f1 and setpoint f2.

Adjustable current limits

Switch f2											
Detent position	0	1	2	3	4	5	6	7	8	9	10
I_{max} [%] of I_N	60	70	80	90	100	110	120	130	140	150	160

Selection of current limits using the AS-interface bit "Speed f1/ Speed f2"

AS-interface bit "Speed f1/Speed f2" = 0	**AS-interface bit "Speed f1/Speed f2" = 1**
Current limitation 160%	Current limitation using switch f2

Interference of the current characteristic

The current limit line is assessed with a constant factor by selecting a lower current limit.

Motor with star connection

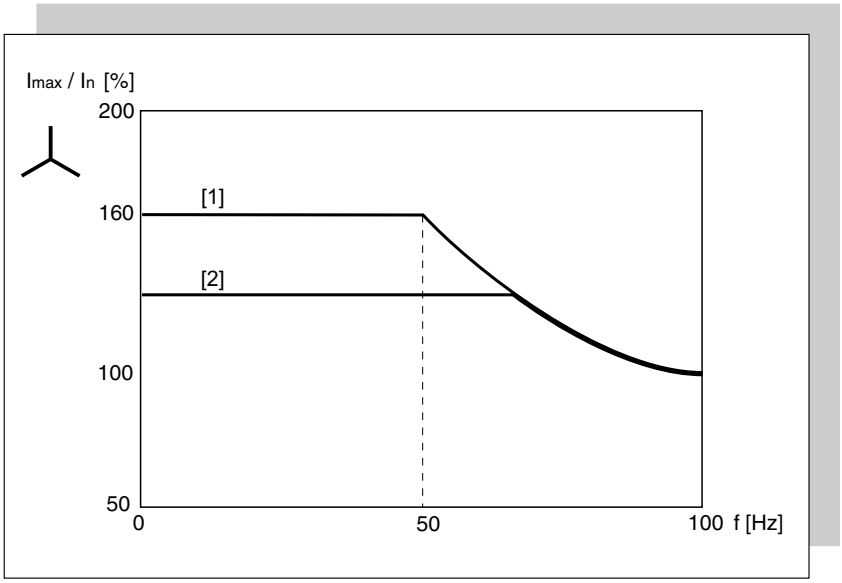

50851AXX

[1] Current limit characteristic standard function
[2] Reduced current limit line for additional function 3 and AS-interface bit "Speed f1/Speed f2" = "1"

Motor with delta connection

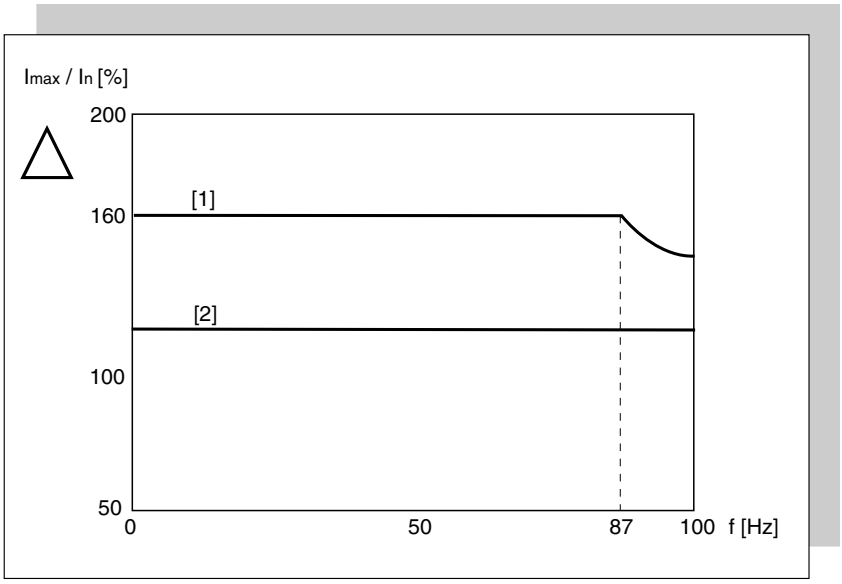

50852AXX

[1] Current limit characteristic standard function
[2] Reduced current limit line for additional function 3 and AS-interface bit "Speed f1/Speed f2" = "1"

Additional function 6

MOVIMOT® with maximum 8 kHz PWM frequency

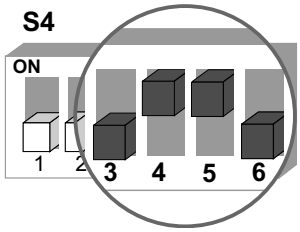

51863AXX

Functional description

- The additional function reduces the maximum PWM frequency that can be set from 16 kHz to 8 kHz using S3/3.
- When DIP switch S3/3 = "ON", the unit operates with an 8 kHz PWM frequency and switches back to 4 kHz depending on the heat sink temperature.

	S3/3 Without additional function 6	S3/3 With additional function 6
ON	PWM frequency variable 16, 8, 4 kHz	PWM frequency variable 8, 4 kHz
OFF	PWM frequency 4 kHz	PWM frequency 4 kHz

Additional function 7

MOVIMOT® with rapid start

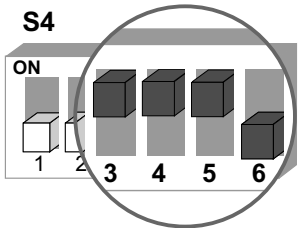

51864AXX

Functional description

- The pre-magnetization time is set to 0 s.
- This means that pre-magnetization is not performed when the drive is enabled in order to accelerate the drive as quickly as possible using the setpoint ramp.

Additional function 8

MOVIMOT® with minimum frequency 0 Hz

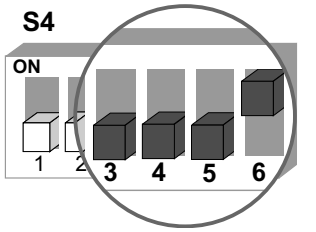

51866AXX

Functional description

In detent position 0 of switch f2, the setpoint f2 with the activated additional function is 0 Hz. All other values that can be set remain unchanged.

Switch f2											
Detent position	**0**	1	2	3	4	5	6	7	8	9	10
Setpoint f2 [Hz] **With additional function activated**	0	7	10	15	20	25	35	50	60	70	100
Setpoint f2 [Hz] **Without additional function**	**5**	7	10	15	20	25	35	50	60	70	100

Additional function 10

MOVIMOT® with reduced torque at low frequencies

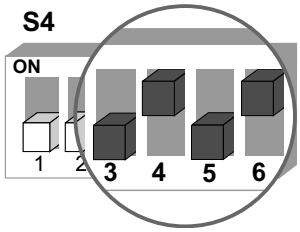

51868AXX

Functional description

- If the slip and active current are reduced at low speeds, the drive builds up a reduced torque (see the following illustration):
- Minimum frequency = 0 Hz (see Additional function 8 on page 123)

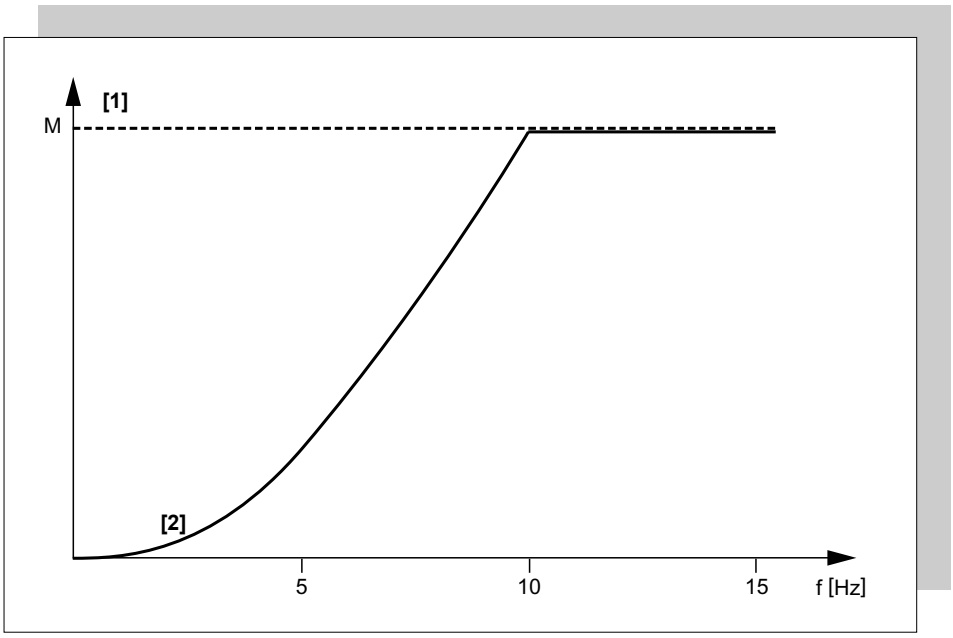

50907AXX

[1] Maximum torque during VFC operation
[2] Maximum torque with activated additional function

Additional function 11

Deactivation of phase failure monitoring

STOP	**STOP** Deactivating the phase failure monitoring in unfavorable operating conditions can damage the unit.

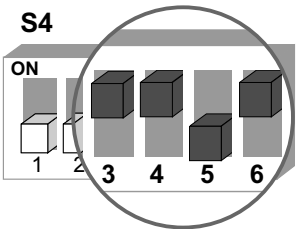

52123AXX

Functional description

- When activating additional function, phase monitoring does not occur.
- It is appropriate, for example, for power supply systems with short-term asymmetries.

Additional function 14

MOVIMOT® with deactivated slip compensation

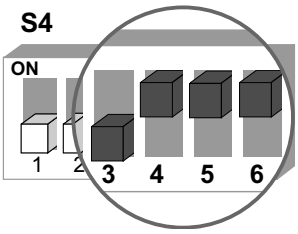

59042AXX

Functional description

Slip compensation is deactivated.

Deactivating slip compensation can reduce the speed accuracy of the motor.

9.6 Startup procedure

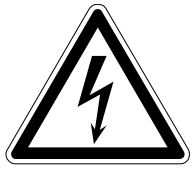

DANGER

When working on the unit, dangerous voltage levels may still be present up to one minute after the mains is disconnected.

Severe or fatal injuries from electric shock.

- Switch off the MOVIMOT® inverter, and secure it against unintentional restart.
- Then wait at least one minute.

1. When mounting the MOVIMOT® inverter, and when S5 = 1 (factory setting), the required AS-interface address is set either using a hand-held programming device (see page 128) or later using a Master (see the description of your AS-interface master).

2. **Check that the MOVIMOT® is correctly connected (see section "Electrical installation MOVIMOT® with integrated AS-interface").**

3. Set the type of the 24 V supply with switch S5 (see page 130).

4. Set the first speed with setpoint potentiometer f1 (factory setting approx. 50 Hz).

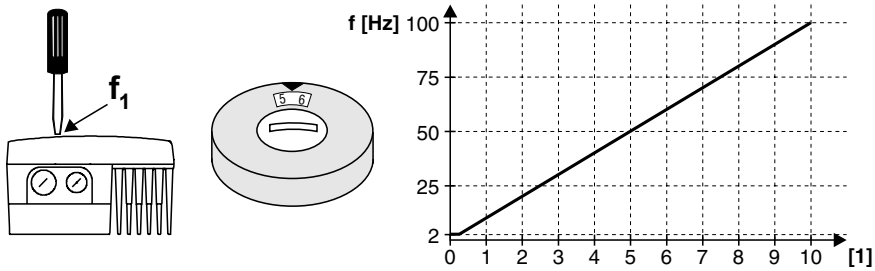

60799AXX

[1] Potentiometer setting

5. Ensure the screw plug has a seal, and reinstall it in the setpoint potentiometer.

STOP

The enclosure specified in the technical data only applies when the screw plug of the setpoint potentiometer is correctly mounted.

When the screw plug is not mounted or incorrectly mounted, the MOVIMOT® inverter can be damaged.

6. Set the second speed with switch f2 (active when AS-interface bit "Speed f1/Speed f2" = "1").

Switch f2											
Detent position	0	1	2	3	4	5	6	7	8	9	10
Setpoint f2 [Hz]	5	7	10	15	20	25	35	50	60	70	100

NOTE

During operation, the first speed is infinitely variable using the setpoint potentiometer f1, which is accessible from outside.

Speeds f1 and f2 can be set independently of each other.

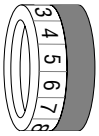

7. Set the ramp time with switch t1 (the ramp times are based on a setpoint step change of 50 Hz).

Switch t1											
Detent position	0	1	2	3	4	5	6	7	8	9	10
Ramp time t1 [s]	0.1	0.2	0.3	0.5	0.7	1	2	3	5	7	10

8. Set the MOVIMOT® inverter on the terminal box and screw it on.

9. AS-interface voltage, switch on 24 V auxiliary voltage and mains.

Assigning the slave address

MOVIMOT® drives with integrated AS-interface are supplied with address 0. The addresses (address 1 to 31) are assigned as follows:

- Address assignment occurs automatically within a configured AS-interface system when replacing a MOVIMOT®. The following prerequisites must be fulfilled:
  - The new MOVIMOT® must have the address 0.
  - If you need to replace several MOVIMOT®, you must exchange them individually (in succession).
- Manual address assignment occurs using the system master (you must connect the drives to the AS-interface cable in succession so that multiple MOVIMOT® units will not receive the same address).
- Manual address assignment occurs using an AS-interface hand-held programming device (before connecting the MOVIMOT® to the AS-interface cable, see the following section).

Assigning the slave address using a hand-held programming device

AS-interface hand-held programming devices offer the following functions:

- Reading and changing an AS-interface slave address
- Reading the AS-interface profile
- Reading and changing the data and parameter bits
- Function check and test run. You will need an external voltage supply (AUX-PWR) for the function check and test run, as the hand-held programming devices do not provide enough power for operation.

When using a hand-held programming device, you need a **two-core** connection cable that fits onto the AS-interface plug connector of the MOVIMOT® (see the following illustration).

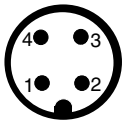

1: AS-Interface +
2: 0V24 [1]
3: AS-Interface -
4: 24V [1]

56746AXX

[1] Pins 2 + 4 are not required for assigning the address.

	STOP
STOP	• Only connect the hand-held programming device using Pin 1 (AS-interface +) and 3 (AS-interface –) with the AS-interface plug connector. The hand-held programming device may be damaged with a faulty connection. • The switch AUX-PWR (S5) in the MOVIMOT® control section must be at position one when using a hand-held programming device for addressing. • After addressing, the switch AUX-PWR (S5) must be set depending on the type of 24 V supply.

Example: Each AS-interface station is individually addressed (A) and reintegrated in the AS-interface network (B).

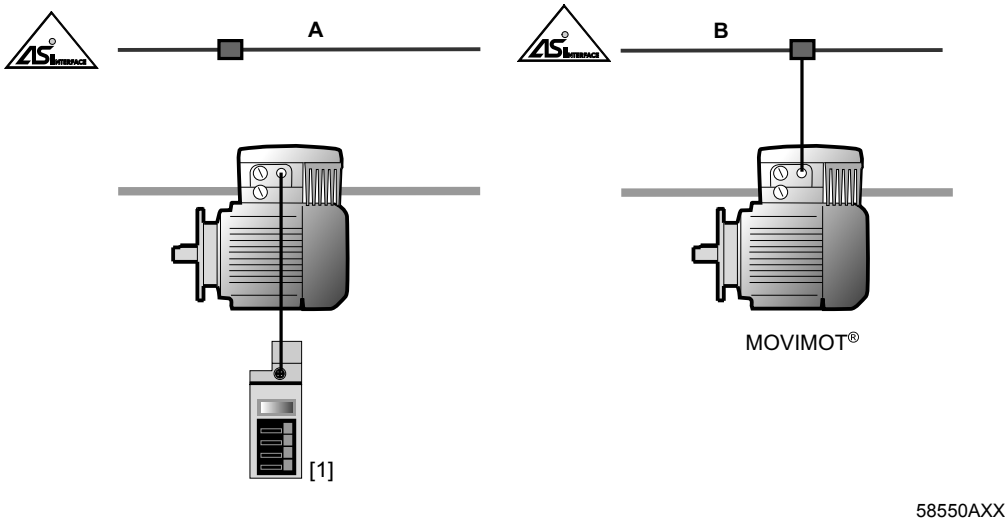

[1] AS-interface hand-held programming device

Select the 24 V supply using switch S5

The switch S5 is located on the connection board next to the control terminal. Select the type of the 24 V supply with the switch.

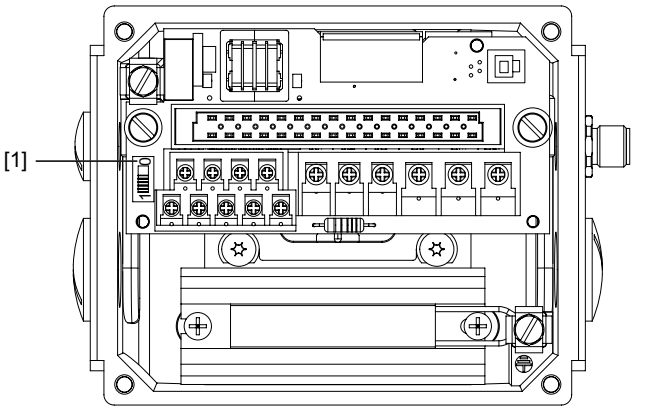

[1] Switch S5

Switch	24 V supply
Switch S5 = 1 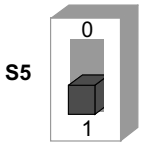 51941AXX	Supplying the MOVIMOT® using AUX PWR (e.g., black AS-interface cable) 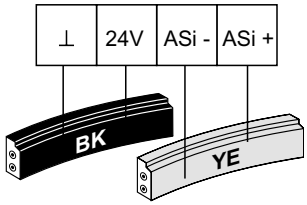 60051AXX
Switch S5 = 0 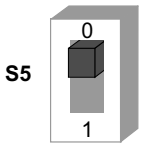 51942AXX	Supplying the MOVIMOT® with power using the AS-interface data cable. 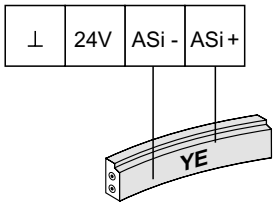 60052AXX

Data AS-interface master Æ MOVIMOT®

The following table shows the 4 data bits that are transferred from AS-interface master to the MOVIMOT® using the AS-interface:

Bit	Function
D0	CW operation/Stop
D1	CCW operation/Stop
D2	Speed f2/Speed f1
D3	Reset[1)]/controller enable

1) With edge change of "0" Æ "1" (only effective in the event of an error)

NOTE

You must set bit D3 to enable the drive (reset/controller enable).

Data MOVIMOT® Æ AS-interface master

The following table shows the 4 data bits that are transferred from MOVIMOT® to the AS-interface master using the AS-interface:

Bit	Function
D0	Ready signal
D1	–
D2	Sensor input 1 (terminal DI 2 or optional M12 socket pin 4)
D3	Sensor input 2 (terminal DI 3 or optional M12 socket pin 2)

Setpoint scaling using parameter bits

The following table shows the parameter bits for setpoint scaling. Setpoint scaling is only effective on the setpoint f1 that can be externally set. Scaling does not interfere with setpoint f2 and the minimum frequency. As an example, the possible setpoint frequencies with the setting f1 = 100 Hz and f1 = 50 Hz are represented in the table:

Parameter bits				Divisor factor	Example 1	Example 2
P3	P2	P1	P0		Setting f1 = 100 Hz	Setting f1 = 50 Hz
1	1	1	1	1.00	100	50
1	1	1	0	1.11	90	45
1	1	0	1	1.25	80	40
1	1	0	0	1.43	70	35
1	0	1	1	1.67	60	30
1	0	1	0	2.00	50	25
1	0	0	1	2.22	45	22.5
1	0	0	0	2.50	40	20
0	1	1	1	2.86	35	17.5
0	1	1	0	3.33	30	15
0	1	0	1	4.00	25	12.5
0	1	0	0	5.00	20	10
0	0	1	1	6.67	15	7.5
0	0	1	0	10.00	10	5
0	0	0	1	14.30	7	3.5
0	0	0	0	20.00	5	2.5

9.7 Advanced startup with MOVITOOLS®

MOVIMOT® drives with integrated AS-interface contain a diagnostics interface for startup and service. This enables diagnostics, manual mode, and parameter setting by scaling factors with the SEW MOVITOOLS® software **(version 4.0 and higher)**.

Start MOVITOOLS®

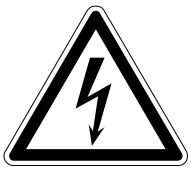

DANGER

When working on the unit, dangerous voltage levels may still be present up to one minute after the mains is disconnected.

Severe or fatal injuries from electric shock.

- Switch off the MOVIMOT® inverter, and secure it against unintentional restart.
- Then wait at least one minute.

1. Remove the screws on the MOVIMOT® inverter, and remove the MOVIMOT® inverter.

2. Remove one closing plug on the MOVIMOT® terminal box.

3. Connect RJ10 plug connecter with the X50 socket. To do this, lead the cable through the open cable entry. As an alternative, you can also connect it with the AYUD adapter (optional) (see starting on page 60).

4. Set the MOVIMOT® inverter on the terminal box and screw it on.

5. Switch off the electronics supply voltage

6. Start the MOVITOOLS® Manager on the PC. The following window opens:

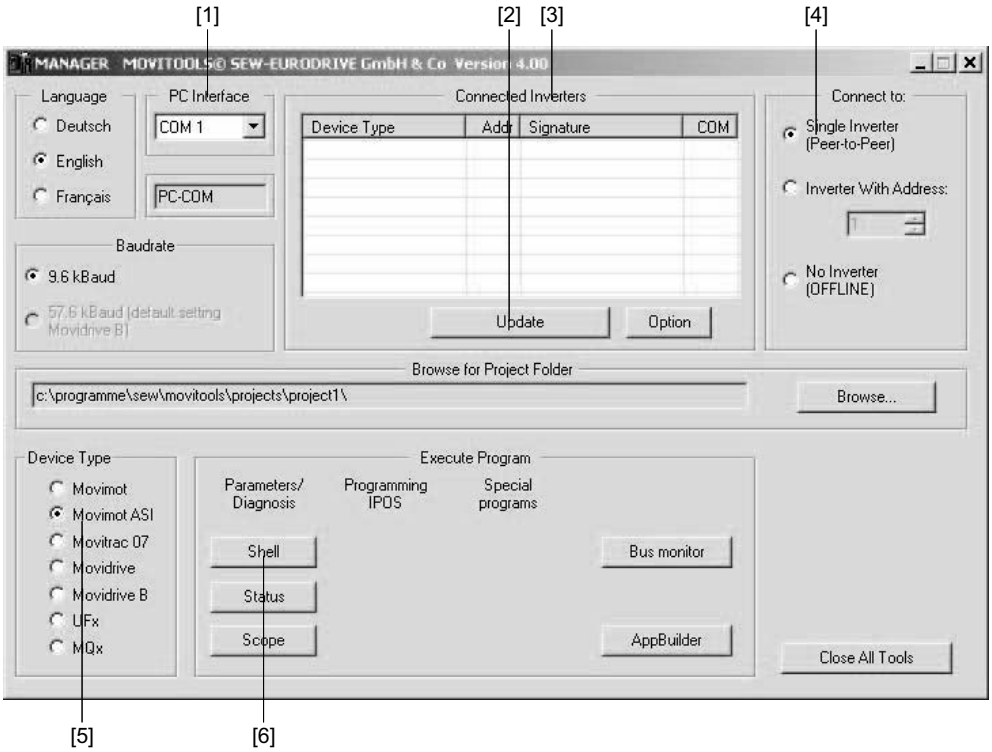

59626AXX

7. Choose the serial interface used in your PC from the dropdown menu "PC-COM" [1].

8. Activate the button [Single Inverter (Peer-to-Peer)] [4] in the group "Connect to".

9. The MOVIMOT® that you used appears in the window "Connected Inverters" [3] after clicking the [Update] [2] button. If no device is displayed, check the communication connection.

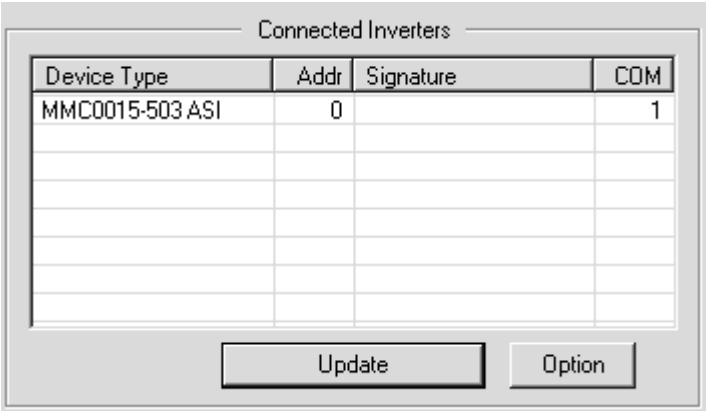

59627AXX

10. Activate the [MOVIMOT ASI] [5] button in the group "Device Type".

11. By clicking the [Shell] [6] button, the window for diagnostics, manual mode, and parameter setting of the scaling factors (Shell) as well as a status window opens.

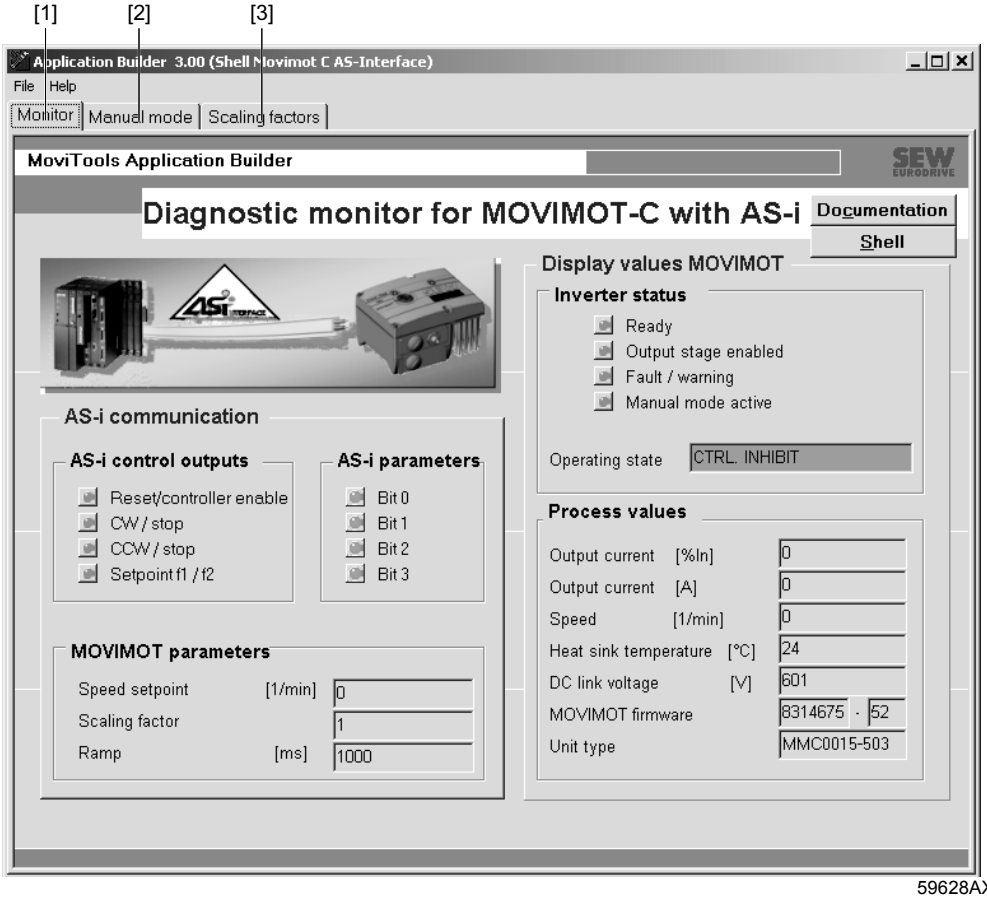

59628AXX

12. You can switch between the tab pages of the program by using the [Monitor] [1], [Manual mode] [2], and [Scaling factors] [3] buttons assigned in the upper left area of the window. For more information on the tab page "Monitor", refer to page 177.

Tab page "Scaling factors"

Scaling factors can be entered in the value area from 1.00 to 50.00 in this tab page. The entry must be confirmed using the [Enter] key.

The basic settings can be restored using the drop-down menu "Restore factory settings".

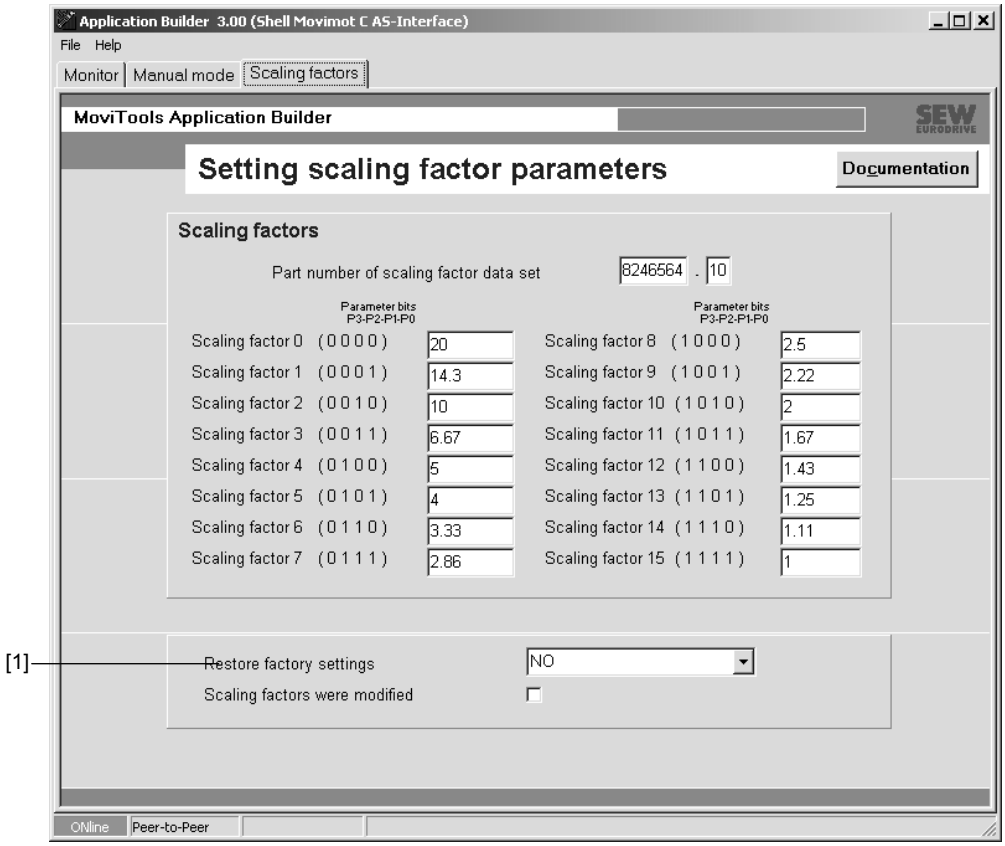

59629AXX

Saving scaling factors

The scaling factors can be saved in an xml file under the menu item [File]/[Save settings as…] [2]. The file name and the directory in which the file is saved can be chosen however you want.

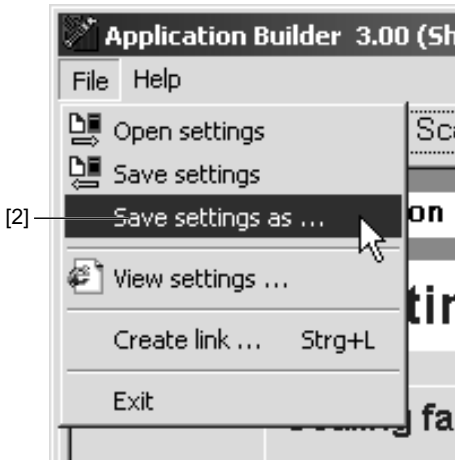

59630AXX

If the values saved in the file are transferred in the MOVIMOT®, the file must be opened by using the menu item [File]/[Open settings] [3].

When opening the file, the scaling factors are automatically downloaded to the device.

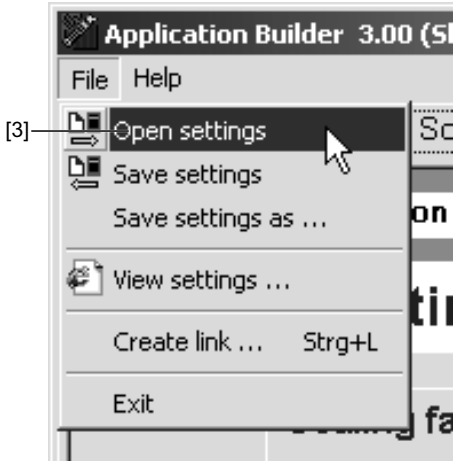

59631AXX

	NOTE
	• For notes on manual operation with the MOVITOOLS® software, refer to page 154. • For notes on Diagnostics with the MOVITOOLS® software, refer to page 174.

9.8 Supplementary notes for installation close to the motor

When the MOVIMOT® inverter with option P2.A is installed close to the motor, observe the following notes:

Check the connection type for the connected motor

Use the following figure to check that the selected connection of the MOVIMOT® matches the connected motor.

03636AXX

Important: For brake motors: do not install brake rectifiers inside the terminal box of the motor.

Motor protection

The connected motor must be equipped with a TH. We recommend wiring the TH using input DI2 (see the following illustration).

- Input DI2 must be monitored by an external controller.
- As soon as DI2 = LOW, the drive must be switched off (Bit D0 and D1 = "0").

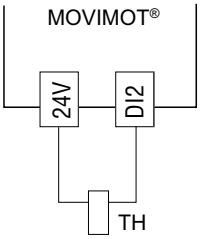

52254AXX

	NOTE
	When installing near the motor, input DI2 is no longer available for connecting external sensors.

DIP switch

When the MOVIMOT® inverter is installed close to the motor the DIP switch S3/1 must be changed from the factory setting to ON:

S3 **Meaning**	**1** **Motor protection**	**2** **Motor power increment**	**3** **PWM frequency**	**4** **No-load damping**	**5** **Motor type**	**6** **Brake released without enable**
ON	**Off**	Motor one rating smaller	Variable (16, 8, 4 kHz)	On	SEW-DZ motor[1)]	On
OFF	On	**Adjusted**	**4 kHz**	**Off**	**IEC motor**	**Off**

1) Only available in Brazil

Braking resistor

- An internal braking resistor (BW1 or BW2) must be connected to the MOVIMOT® with motors without brake.

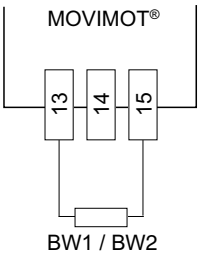

52245AXX

- **Braking resistor may not be connected to the MOVIMOT® with brake motors.**

10 Startup with Communication Interface/Fieldbus

DANGER

You must disconnect the MOVIMOT® inverter from the mains before removal/installation. Dangerous voltages may still be present for up to one minute after disconnection from the mains.

Severe or fatal injuries from electric shock.

- Switch off the MOVIMOT® inverter, and secure it against unintentional restart.
- Then wait at least one minute.

WARNING

The surface temperature of the MOVIMOT® and the external options, for example, the braking resistor (in particular the heat sink) can reach high temperatures during operation.

Burn risk

- Touch the MOVIMOT® drive and the external options only when they have sufficiently cooled.

10.1 Startup procedure

1. **Check that the MOVIMOT® has been correctly connected (see section "Electrical installation").**

2. Set the correct RS-485 address on DIP switches S1/1…S1/4. **Always set address "1" in conjunction with SEW fieldbus interfaces (MF...).**

Decimal address	0	1	2	3	4	5	6	7	8	9	10	11	12	13	14	15
S1/1	–	**X**	–	**X**	–	**X**	–	**X**	–	**X**	–	**X**	–	**X**	–	**X**
S1/2	–	–	**X**	**X**	–	–	**X**	**X**	–	–	**X**	**X**	–	–	**X**	**X**
S1/3	–	–	–	–	**X**	**X**	**X**	**X**	–	–	–	–	**X**	**X**	**X**	**X**
S1/4	–	–	–	–	–	–	–	–	**X**	**X**	**X**	**X**	**X**	**X**	**X**	**X**

X = ON
– = OFF

3. Set the minimum frequency f_{min} with switch f2

Switch f2											
Detent position	0	1	2	3	4	5	6	7	8	9	10
Minimum frequency f_{min} [Hz]	2	5	7	10	12	15	20	25	30	35	40

4. Set the ramp time using switch t1 if the ramp is not specified using the fieldbus (ramp time in relation to a setpoint step change of 50 Hz).

Switch t1											
Detent position	0	1	2	3	4	5	6	7	8	9	10
Ramp time t1 [s]	0.1	0.2	0.3	0.5	0.7	1	2	3	5	7	10

5. Check to see if the requested direction of rotation has been enabled.

Terminal R	Terminal L	Meaning
Activated	Activated	• Both directions of rotation are enabled
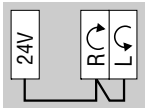		
Activated	Not activated	• Only CW operation enabled • Pre-selected setpoints for CCW operation result in a standstill of drive.
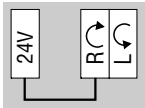		
Not activated	Activated	• Only CCW operation enabled • Pre-selected setpoints for CW operation result in standstill of drive
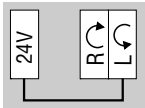		
Not activated	Not activated	• Unit is inhibited or drive is brought to a stop
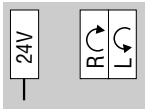		

6. Set the MOVIMOT® inverter on the terminal box and screw it on.

7. Use setpoint potentiometer f1 to set required maximum speed.

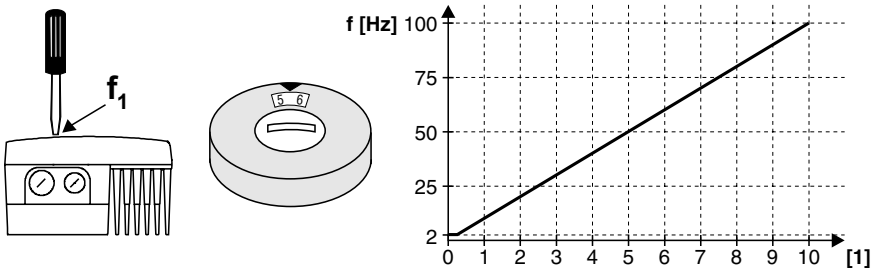

60799AXX

[1] Potentiometer setting

8. Make sure the screw plug of the setpoint potentiometer f1 has a seal and screw plug it in.

STOP	**STOP** The enclosure specified in the technical data only applies when the screw plug of the setpoint potentiometer is correctly mounted. When the screw plug is not mounted or is incorrectly mounted, the MOVIMOT® inverter can be damaged.

9. Connect voltage supply.

	NOTES
	For further information on the function in connection to the RS-485 master, refer to page 144. For further information on the function in connection to the fieldbus interfaces, refer to relevant handbooks: • PROFIBUS Interfaces, Field Distributors • Interbus Interfaces, Field Distributors • DeviceNet/CANopen Interfaces, Field Distributors • AS-interface interfaces, AS-interface field distributors

10.2 Coding process data items

The same process data information is used for control and setpoint selection in all fieldbus systems. The process data is coded according to the standard MOVILINK® profile for SEW drive inverters. In the case of MOVIMOT®, you can differentiate between the following variants:

- 2 process data words (2 PD)
- 3 process data words (3 PD)

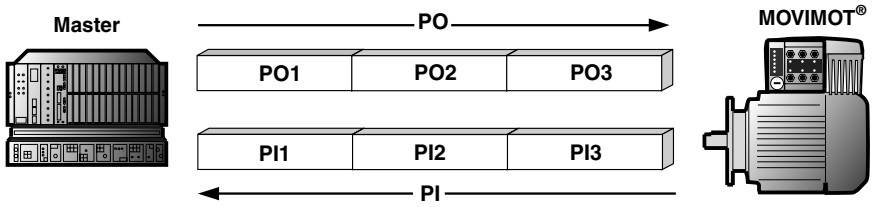

51334AXX

PO = Process output data	PI = Process input data
PO1 = Control word	PI1 = Status word 1
PO2 = Speed [%]	PI2 = Output current
PO3 = Ramp	PI3 = Status word 2

2 Process data words

The higher-level controller sends the process output data "Control word" and "Speed [%]" to the MOVIMOT® to control MOVIMOT® using two process data words; the process input data "Status word 1" and "Output current" are sent from the MOVIMOT® to the higher-level controller.

3 Process data words

When control uses 3 process data words, the "ramp" is sent as the additional process output data word and "status word 2" is sent as the third process input data word.

Process output data

Process output data is sent from the master controller to the MOVIMOT® inverter (control information and setpoints). However, it only becomes effective in MOVIMOT® if the RS-485 address in the MOVIMOT® (DIP switches S1/1 to S1/4) is set to a value other than 0. MOVIMOT® can be controlled using the following process output data:

- PO1: Control word
- PO2: Speed [%] (setpoint)
- PO3: Ramp

Virtual terminals for brakes are applied with downward ramps (rapid stop).
Only for MOVIMOT® with additional function 7 or 12

Virtual terminals for releasing the brake without drive enable, only when MOVIMOT® switch S2/2 = "ON" (See the MOVIMOT® operating instructions)

	Basic control block															
	15	14	13	12	11	10	9	8	7	6	5	4	3	2	1	0
PO1: Control word	Not assigned[1)] Reserved for special functions						**Bit "9"**	Bit "8"	Not assigned[1)]	"1" = Reset	Not assigned[1)]			"1 1 0" = Enable Otherwise stop		
PO2: Setpoint	Signed percentage value / 0.0061% **Example:** –80% / 0.0061% = – 13115 = $CCC5_{hex}$															
PO3: Ramp (only for 3-word protocol)	Time from 0 to 50 Hz in ms (range: 100...10,000 ms) **Example:** 2.0 s = 2000 ms = $07D0_{hex}$															

1) Recommendation for all unassigned bits = "0"

Control word, bits 0...2

The "Enable" control command is specified with bits 0...2 by entering the control word = 0006_{hex}. The CW and/or CCW input terminal must also be set to +24 V (jumpered) to enable the MOVIMOT®.

The "Stop" control command is issued by resetting bit 2 = "0". Use the stop command 0002_{hex} to enable compatibility with other SEW inverter series. MOVIMOT® always triggers a stop at the current ramp whenever bit 2 = "0", regardless of the status of bit 0 and bit 1.

Control word bit 6 = Reset

In the event of a malfunction, the fault can be acknowledged by setting bit 6 = "1" (Reset). For reasons of compatibility, any control bits not assigned must be set to the value 0.

Speed [%]

The speed setpoint is specified as a percentage value based on the maximum speed set with the f1 setpoint potentiometer.

Coding: $C000_{hex}$ = –100% (CCW operation)
4000_{hex} = +100% (CW operation)
→ 1 digit = 0.0061%

Example: 80% f_{max}, CCW rotation:

Calculation: –80%/0.0061 = $–13115_{dec}$ = $CCC5_{hex}$

Ramp

The current ramp generator in the process output data word PO3 is transferred if the process data exchange takes place using three process data items. The ramp generator set with switch t1 is used if MOVIMOT® is controlled by two process data items.

Coding: 1 digit = 1 ms

Range: 100…10,000 ms

Example: 2.0 s = 2000 ms = 2000_{dec} = $07D0_{hex}$

Process input data

The MOVIMOT® inverter sends back process input data to the higher-level controller. The process input data consists of status and actual value information. MOVIMOT® supports the following process input data:

- PI1: Status word 1
- PI2: Output current
- PI3: Status word 2

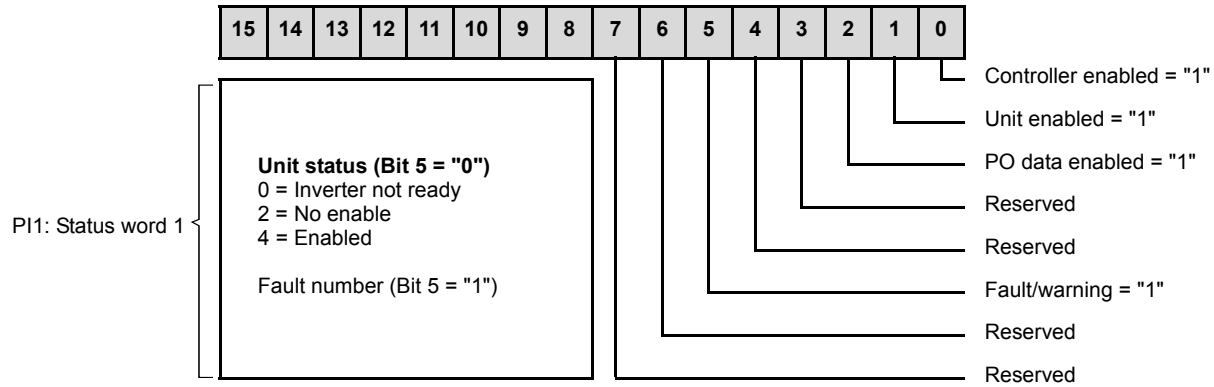

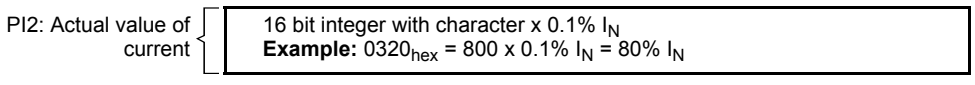

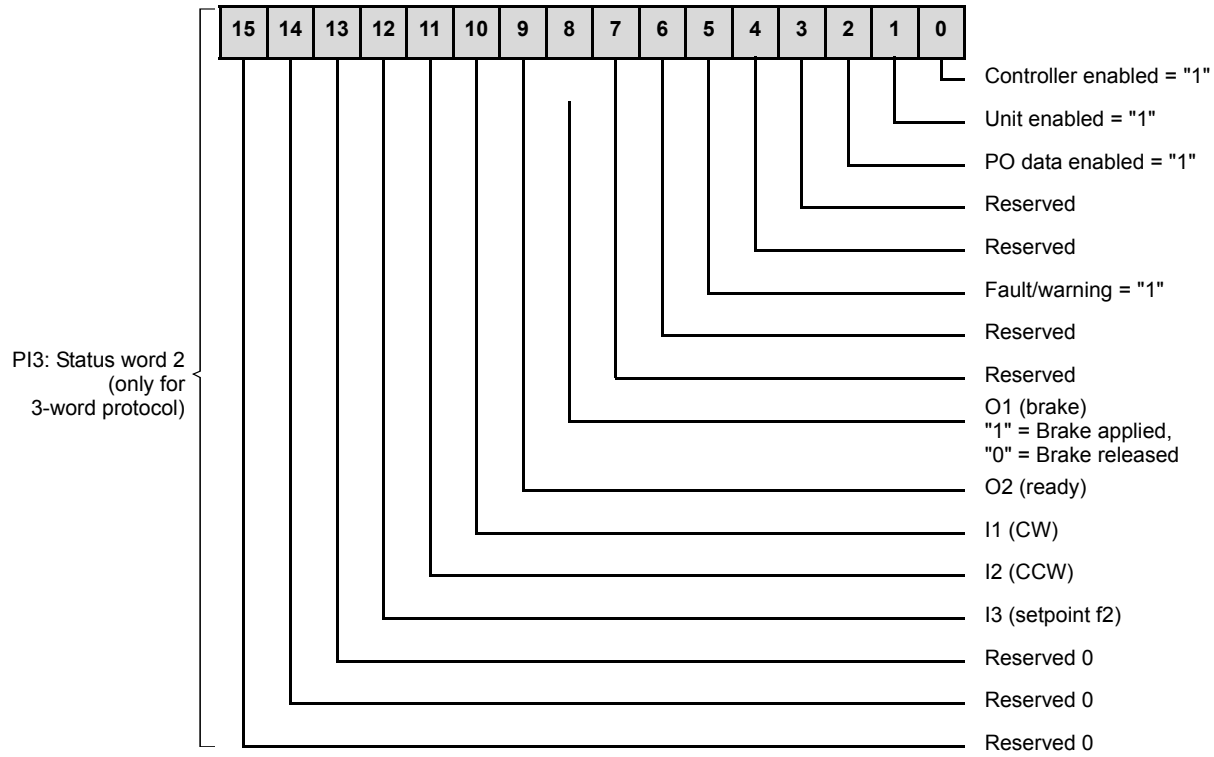

10.3 Function with RS-485 master

- The control (e.g. PLC) is the master, MOVIMOT® is the slave.
- One start bit, one stop bit and one parity bit (even parity) will be used.
- Transmission complies with the SEW MOVILINK® protocol (see section "Coding process data items") with a fixed transfer rate of 9600 baud.

Message structure

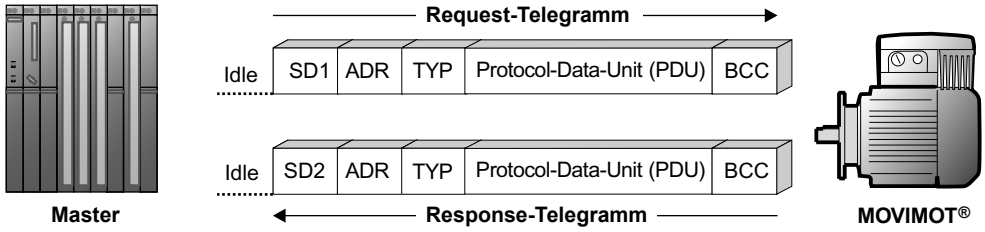

60459AEN

Idle = Idle period of at least 3.44 ms

SD1 = Start delimiter (start character) 1: Master → MOVIMOT®: 02_{hex}

SD2 = Start delimiter (start character) 2: MOVIMOT® → Master: $1D_{hex}$

ADR = Address 1-15
Group address 101–115
254 = Point-to-point
255 = Broadcast

Type = User data type

PDU = User data

BCC = Block check character (BCC): XOR all bytes

	NOTE
	If the type "cyclic" is selected, MOVIMOT® expects the next bus activity after a maximum of one second (master protocol). If this bus activity is not detected, MOVIMOT® rests automatically (timeout monitoring).

	WARNING
	There is no timeout monitoring if the type "acyclical" is selected. The drive can continue to run uncontrolled when there is a bus connection delay. Severe or fatal injuries from uncontrolled operation. • Run the bus connection between the master and the MOVIMOT® inverter only with "cyclical" transfer.

Idle period and start delimiter

MOVIMOT® detects the start of a request message by means of an idle period lasting at least 3.44 ms, followed by the character 02_{hex} (start delimiter 1). In the event that the transmission of a valid request message is canceled by the master, a new request message may not be sent until at least twice the idle period (approx. 6.88 ms) has elapsed.

Address (ADR)

MOVIMOT® supports the address range from 0 to 15 and access using the point-to-point address (254) or the broadcast address (255). It is only possible to read the current process input data (status word, current actual value) using address 0. The process output data sent by the master is not effective because PO data processing is not active when the address setting is 0.

Group address

Furthermore, ADR = 101…115 makes it possible to group several MOVIMOT® units. When this is done, all MOVIMOT® units in one group are set to the same RS-485 address (e.g. group 1: ADR = 1, group 2: ADR = 2).

The master can now assign new group setpoints to these groups by using ADR = 101 (setpoints to inverters in group 1) and ADR = 102 (setpoints for group 2). The inverters will not send a reply in this addressing version. The master must observe a minimum rest time of 25 ms between two broadcast or group messages.

User data type (TYPE)

As a rule, MOVIMOT® supports four different PDU (Protocol Data Unit) types, which are principally determined by the process data length and transmission variant.

Type	Transmission variant	Process data length	User data
03_{hex}	Cyclical	2 words	Control word/speed [%]/status word 1/output current
83_{hex}	Acyclical	2 words	
05_{hex}	Cyclical	3 words	Control word/speed [%]/ramp/status word 1/output current/status word 2
85_{hex}	Acyclical	3 words	

Timeout monitoring

In the "cyclical" transmission variant, MOVIMOT® expects the next bus activity (request message of types named above) after a maximum of one second. If this bus activity is not detected the drive automatically decelerates with the most recent valid ramp (timeout monitoring). The "ready" relay signal drops out. There is no timeout monitoring if the "acyclical" transmission variant is selected.

Block check character BCC

The block check character (BCC) is used in conjunction with even parity formation to ensure reliable data transmission. The block check character is formed by means of an XOR logic operation of all message characters. The result is transmitted at the end of the message in the BCC.

Example

The following figure gives an example of how a block check character is created for an acyclical message of the PDU type 85_{hex} with 3 process data items. The XOR logic operation on the characters SD1 … $PO3_{low}$ results in the value 13_{hex} as the block check character BCC. This BCC will be sent as the last character of the message. The recipient checks the character parity after receiving the individual characters. Following this, the block check character is created from the received characters SD1 … $PO3_{low}$ in accordance with the diagram below. The message has been correctly transmitted if the calculated and received BCCs are identical, and there is no character parity error. Any other result will be displayed as a transmission error. The message may have to be repeated.

Process Output Data (PO)

Idle	02_{hex}	01_{hex}	85_{hex}	00_{hex}	06_{hex}	20_{hex}	00_{hex}	$0B_{hex}$	$B8_{hex}$	13_{hex}
	SD1	*ADR*	*TYP*	*$PO1_{hi}$*	*$PO1_{lo}$*	*$PO2_{hi}$*	*$PO2_{lo}$*	*$PO3_{hi}$*	*$PO3_{lo}$*	*BCC*

	Stop	*Parity*								*Start*	
SD1: 02_{hex}		1	0	0	0	0	0	0	1	0	
ADR: 01_{hex}		1	0	0	0	0	0	0	0	1	XOR
TYP: 85_{hex}		1	1	0	0	0	0	1	0	1	XOR
$PO1_{hi}$: 00_{hex}		0	0	0	0	0	0	0	0	0	XOR
$PO1_{lo}$: 06_{hex}		0	0	0	0	0	0	1	1	0	XOR
$PO2_{hi}$: 20_{hex}		1	0	0	1	0	0	0	0	0	XOR
$PO2_{lo}$: 00_{hex}		0	0	0	0	0	0	0	0	0	XOR
$PO3_{hi}$: $0B_{hex}$		1	0	0	0	0	1	0	1	1	XOR
$PO3_{lo}$: $B8_{hex}$		0	1	0	1	1	1	0	0	0	XOR
BCC: 13_{hex}		**1**	**0**	**0**	**0**	**1**	**0**	**0**	**1**	**1**	

01660CEN

Message processing in the MOVILINK® master

The following algorithm must be observed for sending and receiving MOVILINK® messages in any programmable controllers, in order to ensure correct data transmission.

Send request message

a) Send request message (e.g. send set values to MOVIMOT®)

1. Wait for expiration of idle period (at least 3.44 ms, at least 25 ms with group or broadcast messages).
2. Send request message to inverter.

Receive response message

b) Receive response message

(Acknowledgement signal + actual values from MOVIMOT®)

1. The response message must be received within approx. 100 ms, otherwise, it is sent again.
2. Calculated block check character (BCC) of the response message = received BCC?
3. Start delimiter of response message = $1D_{hex}$?
4. Response address = Request address?
5. Response PDU type = Request PDU type?
6. All criteria satisfied: → Transmission OK. Process data items valid.
7. The next request message can now be sent (continue from point a).

All criteria satisfied: → Transmission OK. Process data items valid. The next request message can now be sent (continue from point a).

Sample telegram

This example deals with the control of a MOVIMOT® AC motor using three process data words of the PDU type 85_{hex} (3 PD acyclical). The RS-485 master sends three process output data words (PO) to the MOVIMOT® AC motor. MOVIMOT® responds by sending three process input data (PI).

Request message from RS-485 master to MOVIMOT®

PO1: 0006_{hex}	Control word 1 = enable
PO2: 2000_{hex}	Speed [%] setpoint = 50% (of f_{max})[1)]
PO3: $0BB8_{hex}$	Ramp = 3 s

Response message from MOVIMOT® to RS-485 master

PI1: 0406_{hex}	Status word 1
PI2: 0300_{hex}	Output Current = [% I_N]
PI3: 0607_{hex}	Status word 2

Coding of process data items, see page 141.

Sample message "3 PD acyclical"

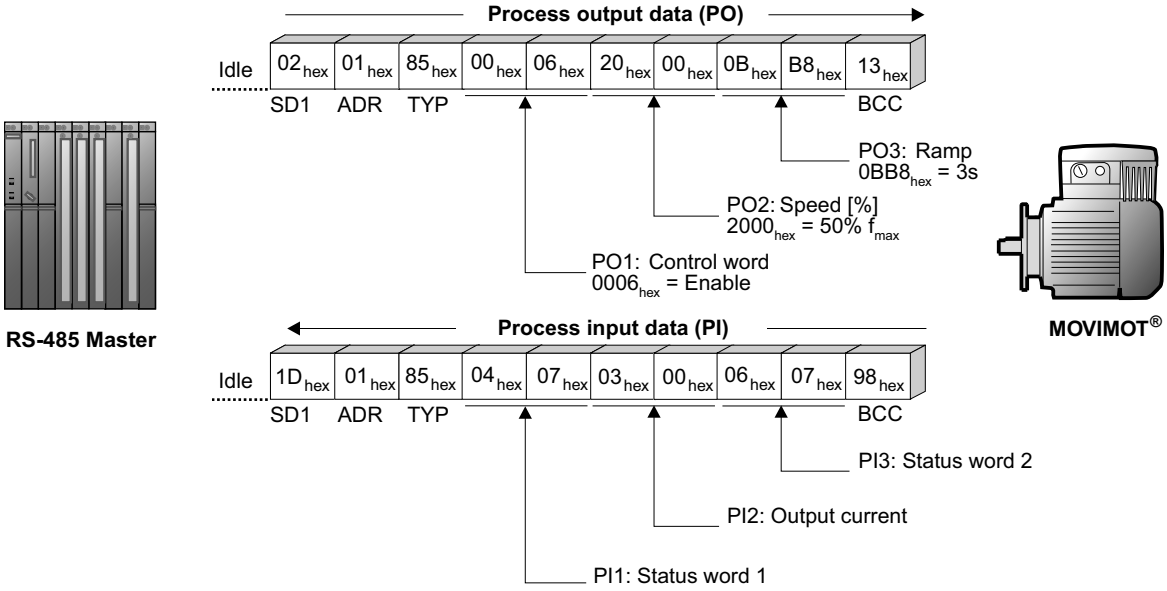

60461AEN

This example shows the acyclical transmission variant; i.e., no timeout monitoring is active in the MOVIMOT®. The cyclical transmission variant can be implemented with the entry TYPE = 05_{hex}. In this case, MOVIMOT® expects the next bus activity (request message of the aforementioned types) within one second at the latest, otherwise MOVIMOT® brings itself to a stop automatically (timeout monitoring).

1) f_{max} is specified on setpoint potentiometer f1

11 Operation

11.1 Operating display of MOVIMOT® standard version

Status LED

The status LED is located on top of the MOVIMOT® inverter (see the following illustration).

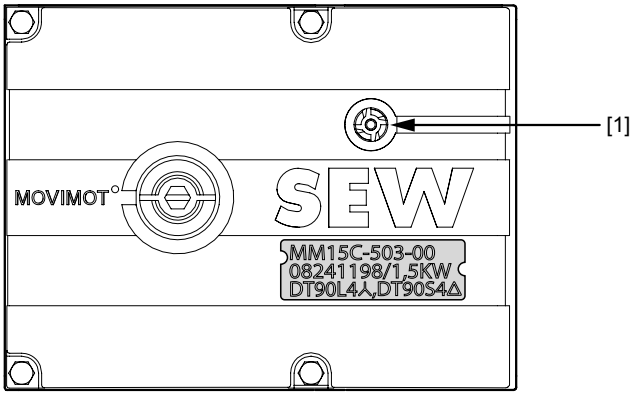

50867AXX

[1] MOVIMOT® status LED

Meaning of the LED statuses

The three-color LED signals the operating and fault states.

LED Color	LED Status	Operating Status	Description
–	Off	Not ready for operation	No 24 V power supply
Yellow	Uniform flashing	Not ready for operation	Self-test phase active or 24 V supply present but supply voltage not OK
Yellow	Uniform rapid flashing	Ready for operation	Brake release without active drive enable (only with S2/2 = "ON")
Yellow	Steady light	Ready, but unit inhibited	24 V power supply and supply voltage OK, but no enable signal Check startup if the drive does not run with an enable signal
Green/ yellow	Flashing with alternating colors	Ready, but timed out	Faulty communication with cyclical data exchange
Green	Steady light	Unit enabled	Motor in operation
Green	Uniform rapid flashing	Current limit active	Drive operating at current limit
Red	Steady light	Not ready for operation	Check DC 24 V supply Ensure that there is a smoothed DC voltage with low ripple (residual ripple max. 13%) present

The description of the fault status begins on page 167.

11.2 MOVIMOT® operating display with integrated AS-interface

LEDs

The status LED and AS-interface LED are located on top of the MOVIMOT inverter (see the following illustration).

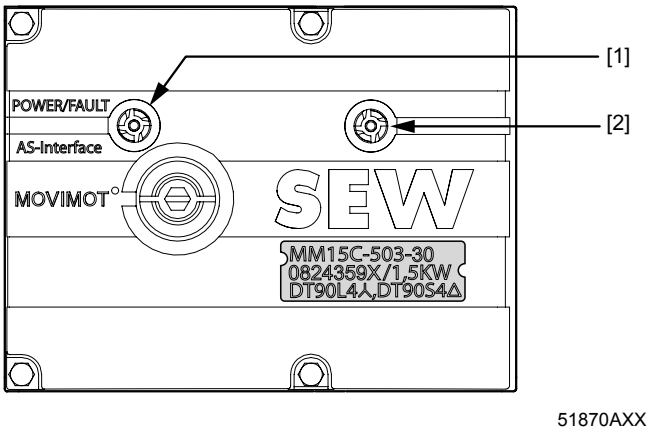

[1] AS-interface LED
[2] MOVIMOT® status LED

Meaning of the AS-interface LED statuses

LED Color	LED Status	Operating Status	Description
–	Off	Not ready for operation	No 24 V at the AS-interface connection
Green	To	Ready for operation	Normal operation No 24 V at the AS-interface connection available Communication available
Red	To	Not ready for operation	Communication interrupted or slave address is set to 0

Meaning of the LED statuses

The three-color LED signals the operating and fault states.

LED Color	LED Status	Operating Status	Description
–	Off	Not ready for operation	No 24 V power supply
Yellow	Uniform flashing	Not ready for operation	Self-test phase active or 24 V supply present but supply voltage not OK
Yellow	Uniform rapid flashing	Ready for operation	Brake release without active drive enable (only with S3/6 = "ON")
Yellow	Steady light	Ready, but unit inhibited	24 V power supply and supply voltage OK, but no enable signal
Green/ yellow	Flashing with alternating colors	Ready, but timed out	Faulty communication with cyclical data exchange
Green	Steady light	Unit enabled	Motor in operation
Green	Uniform rapid flashing	Current limit active	Drive operating at current limit
Red	Steady light	Not ready for operation	Check DC 24 V supply Ensure that there is a smoothed DC voltage with low ripple (residual ripple max. 13%) present

The description of the fault status begins on page 172.

DBG60B keypad Monitor mode

You can display important information in monitor mode with the DBG60B keypad using the status of the MOVIMOT® drive.

Activation:

Connect the DBG60B to the MOVIMOT® drive with integrated AS-interface (see page 59). The unit designation of the MOVIMOT® device selected is displayed for a few seconds. The DBG60B then switches to the monitor mode.

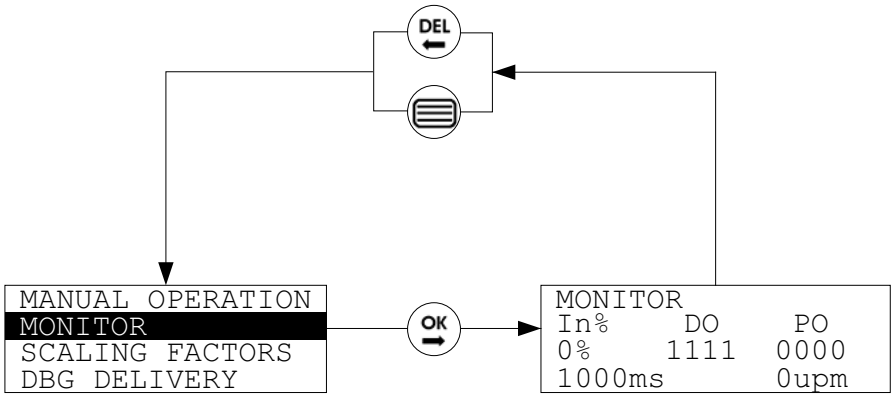

58741AEN

If you are not in monitor mode, switch to monitor mode as follows:

- Call up the context menu using the [Activate context menu] key .
- In the context menu, choose the menu item [MONITOR] using the [Up arrow] /[Down arrow] keys and confirm with the [OK] key .

The keypad is now in monitor mode.

Display in monitor mode

MONITOR		
In%	DO	PO
0%	1111	0000
xxxxms		0upm

In%: Output current in % of I_n

DO: Data bits	D0	CW/Stop
	D1	CCW/Stop
	D2	Setpoint f1/f2
	D3	Reset/enable
PO: Parameter bits	P0	Parameter bits 0
	P1	Parameter bits 1
	P2	Parameter bits 2
	P3	Parameter bits 3

xxxms: Ramp time
0upm: Actual speed

- To leave monitor mode, choose the [Activate context menu] or [DEL] key.

	NOTE
	For notes on manual operation with the DBG60B keypad, you can reference it starting on page 162.

11.3 Keypads MBG11A and MLG11A for MOVIMOT® standard design

	NOTE
	For notes on startup with the MBG11A or MLG11A options, refer to page 102.

The MBG11A and MLG11A keypads can execute the following MOVIMOT® functions:

Function	Explanation
Display	Negative display value; e.g., = CCW operation Positive display value; e.g., = CW operation The display value is based on the speed set using the setpoint potentiometer f1. Example: Display "50" = 50% of the speed set using the setpoint potentiometer. **Important: If the display is "0", the drive is turning at f_{min}.**
Increase the speed	For CW operation: For CCW operation 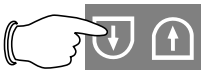
Reduce the speed	For CW operation: 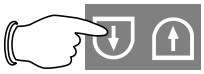 For CCW operation
Inhibit MOVIMOT®	Press the following keys simultaneously: Display =
Enable MOVIMOT®	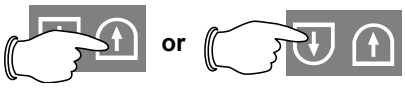 **or** **Important: After enable, MOVIMOT® accelerates to the value and direction of rotation saved last.**
Change in direction of rotation from CW to CCW	1. until display = 2. Pressing again changes the direction of rotation from CW to CCW.
Change in direction of rotation from CCW to CW	1. until display = 2. Pressing again changes the direction of rotation from CCW to CW.
Memory function	After the supply system has been switched off and on again, the value last set is retained provided the 24 V supply was present for at least 4 seconds following the most recent setpoint change.

11.4 Speed control module MWA21A for MOVIMOT® standard design

	NOTES
	• For notes on connecting the MWA21A option, refer to page 40. • For notes on startup with the MWA21A option, refer to page 104.

Control

The MOVIMOT® is controlled from f_{min} to f_{max} using the analog signal at terminal 7 and terminal 8.

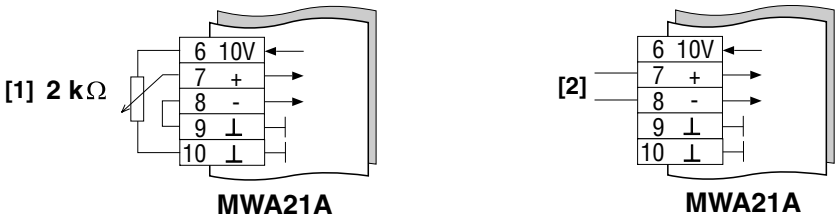

05067BXX

[1] Potentiometer using the 10 V reference voltage (alternative 5 kW)
[2] Potential-free analog signal

Setpoint stop function:

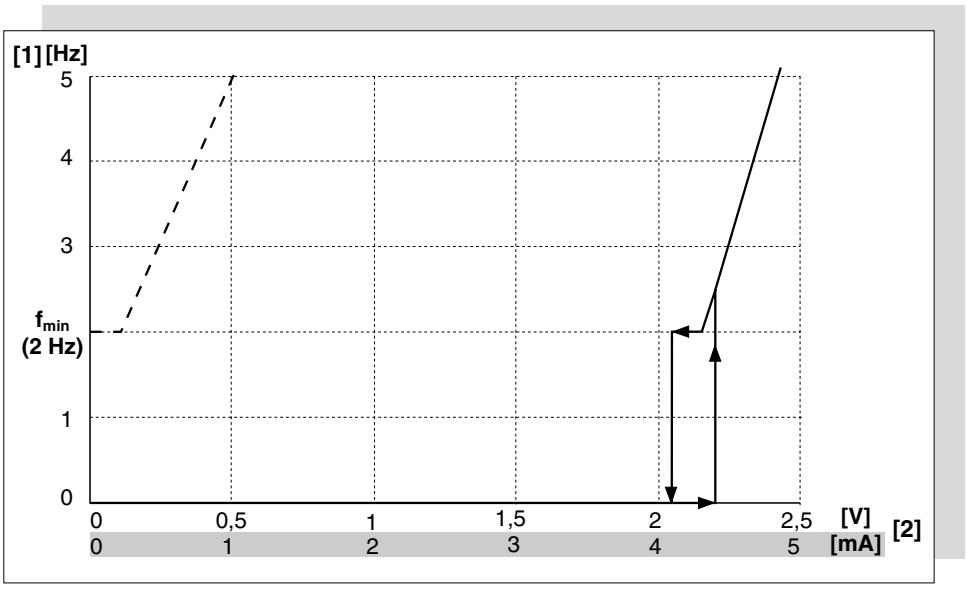

05068BXX

Setting:

– – – –	**0...10 V / 0...20 mA**
———	**2...10 V / 4...20 mA**

[1] Output frequency
[2] Setpoint

11.5 MOVITOOLS® Manual Mode for MOVIMOT® with integrated AS-interface

MOVIMOT®drives with integrated AS-interface contain a diagnostics interface for startup and service. This enables diagnostics, manual mode, and parameter setting by scaling factors with the SEW MOVITOOLS® software **(version 4.0 and higher)**.

The MOVITOOLS® software manual mode can be used for manual drive operation (see the following illustration).

First, connect the PC to the MOVIMOT® drive. Start the MOVITOOLS® software and switch to the [Manual mode] tab page (see, starting on page 132).

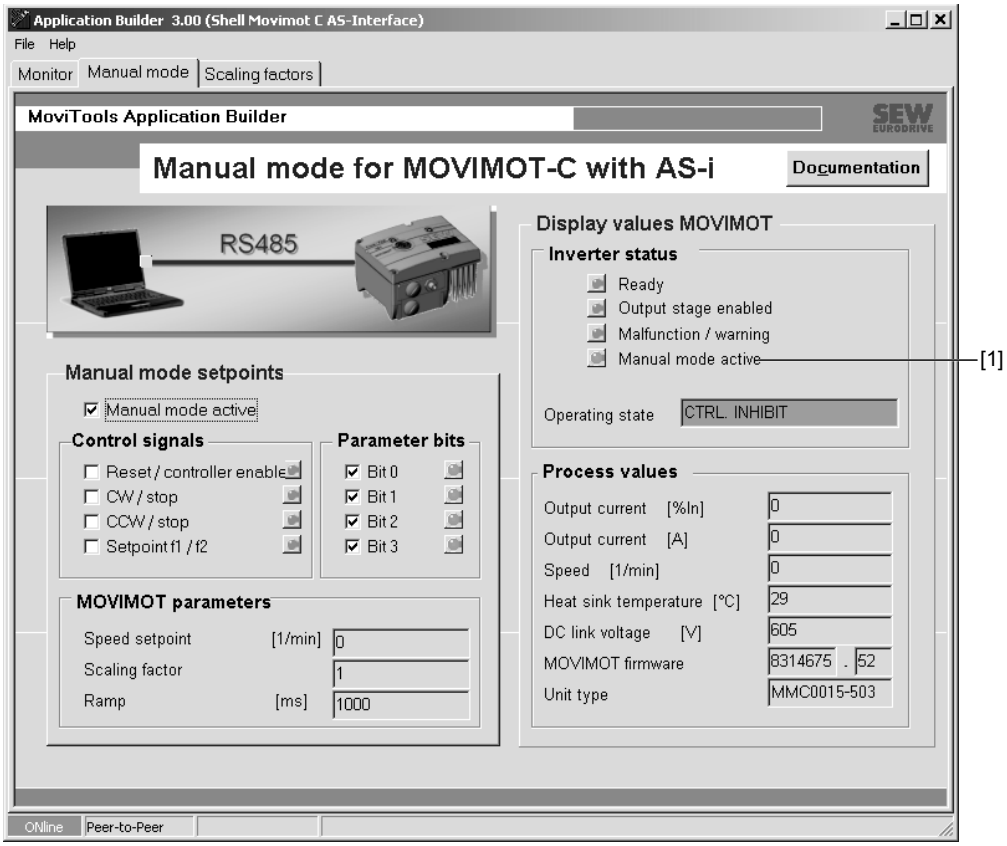

59632AXX

DANGER

The AS-interface control signal of the master is immediately effective when deactivating manual mode. If the AS-interface control signal D3 is set, the MOVIMOT® drive can unintentionally start when deactivating manual mode.

Severe or fatal injuries from crushing.

- Before activating manual mode, set the AS-interface control signal D3 of the master back (controller inhibit active).
- You may change the AS-interface control signal D3 only after deactivating manual mode.

Activating manual mode

You activate manual mode by clicking the check box "Manual mode active" [2]:

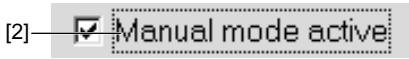

59633AXX

- The successful activation of manual mode is displayed in the group "Display value MOVIMOT" using the green icon "Manual mode active" [2]. The control signals and parameter bits are set to default values as in the above illustration.
- The control signals and parameter bits are then available for controlling the unit in manual mode.
- If the electronics supply is switched off and on again in manual mode, the unit is subsequently in control mode using AS-interface. To switch back to manual mode, you must repeat the steps described.

Control in manual mode

The requested signals are set by clicking the relevant button and reset by re-clicking them. The status is signaled using an icon (shaded means inactive, green means active). The control signal or parameter bit combination is effective in the unit by activating the button.

The control signal "Reset/controller enabled" [3] and all parameter bits are activated in the following illustration and activation is represented by a green icon:

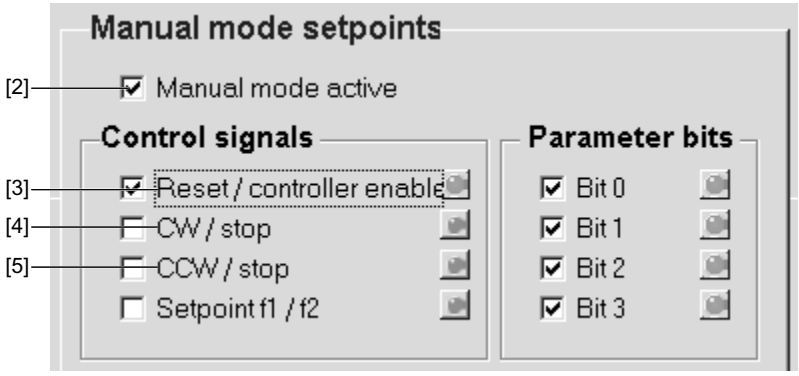

59634AXX

	NOTE
	If enable is carried out in manual mode, the control signal "CW/stop" [4] or "CCW/stop" [5] and the control signal "Reset/controller enabled" [3] must be set. If the control signal "Reset/controller enabled" [3] is not set, the unit has the status "Controller inhibit".

Group parameters

- The current speed setpoint [1], the scaling factor displayed using the parameter bits [2], and the set ramp time [3] using the potentiometer t1 are displayed in this group. No changes can be executed.
- If setpoint f1 is active, the influence of the scaling factors is considered in the speed setpoint.

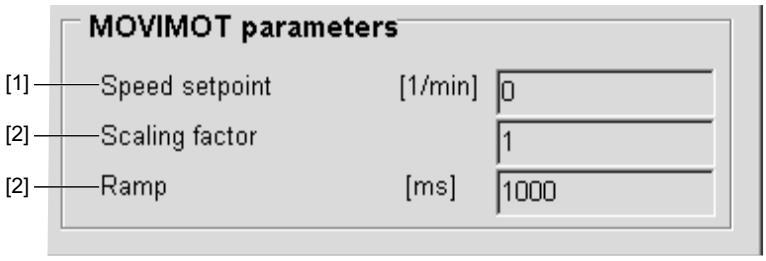

59635AXX

Group display values

Important information for the inverter status and process values are displayed in this group.

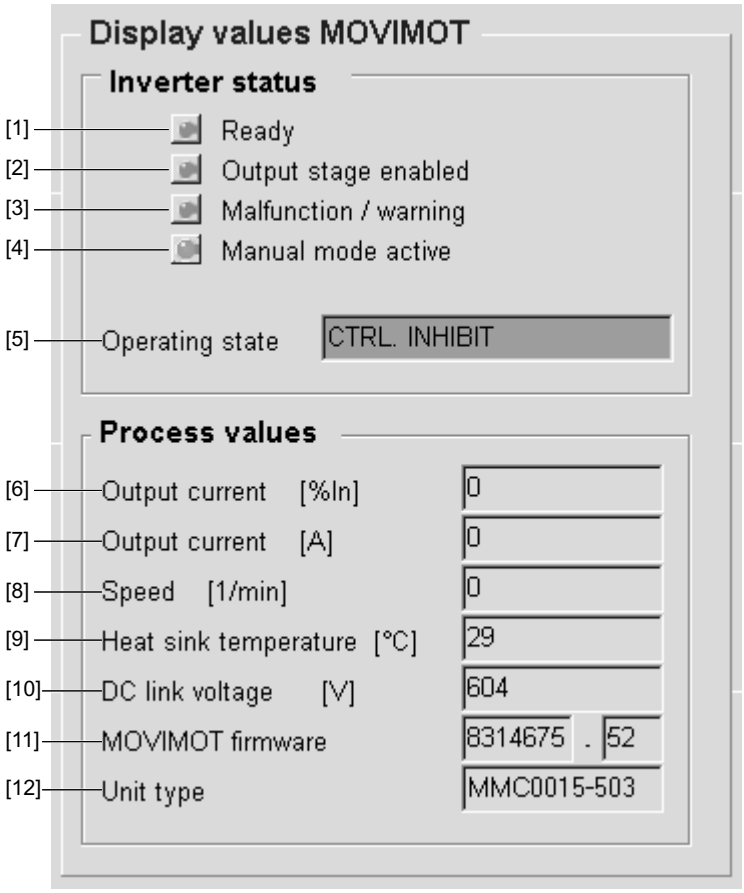

59636AXX

[1] Ready for operation
[2] Output stage enabled
[3] Fault/warning
[4] Manual mode active
[5] Operating status

[6] Output current = [% I_N]
[7] Output current [A]
[8] Speed [rpm]
[9] Heat sink temperature [°C]
[10] DC link voltage [V]
[11] MOVIMOT firmware
[12] Unit type

Time out interval during manual mode

- Timeout monitoring is effective in the unit when communication is interrupted, the "Manual mode" tab page is closed, or the PC program is ended, so the unit will not operate uncontrolled after activating manual mode.
- The manual mode is deactivated after 10 s, and the unit changes to control using AS-interface mode.

DANGER

The AS-interface control signals of the master are immediately effective when timeout monitoring is triggered. If the AS-interface control signal D3 is set, the MOVIMOT® drive can unintentionally start timeout monitoring is triggered.

Severe or fatal injuries from crushing.

- Before activating manual mode, set the AS-interface control signal D3 of the master back (controller inhibit active).
- You may change the AS-interface control signal D3 only after deactivating manual mode.

Executing a reset

The control signal "Reset/controller enabled" must be deactivated and then activated to execute a fault reset in manual mode because a positive edge from the unit must be detected for reset execution. Since the PC surface requires cyclical data from the unit, the message "Communication error" [1] appears after executing the reset.

59637AXX

The message must be acknowledged by clicking the "Ignore" [2] button.

DANGER

The AS-interface control signal of the master is immediately effective after executing a reset. If the AS-interface control signal D3 is set, the MOVIMOT® drive can unintentionally start after a reset.

Severe or fatal injuries from crushing.

- Before activating manual mode, set the AS-interface control signal D3 of the master back (controller inhibit active).
- You may change the AS-interface control signal D3 only after deactivating manual mode.

11.6 DBG60B keypad for MOVIMOT® with integrated AS-interface

Function

The DBG60B keypad can be used to control MOVIMOT® drives with integrated AS-interface in manual mode. You can also display important information in monitor mode using the status of the MOVIMOT® drive.

Features

- Illuminated text display, choice of 7 languages
- Keypad with 21 keys
- Can be connected using extension cable DKG60B (5 m)
- Enclosure IP40 (EN 60529)

Overview

Keypad		Language	Part Number
56555AXX	**DBG60B-01**	DE/EN/FR/IT/ES/PT/NL (German/English/French/Italian/Spanish/Portuguese/Dutch)	1 820 403 1
	DBG60B-02	DE/EN/FR/FI/SV/DA/TR (German/English/French/Finnish/Swedish/Danish/Turkish)	1 820 405 8
	DBG60B-03	DE/EN/FR/RU/PL/CS (German/English/French/Russian/Polish/Czech)	1 820 406 6

NOTE

For notes on connecting the DBG60B keypad, refer to page 59.

Dimension drawing for DBG60B

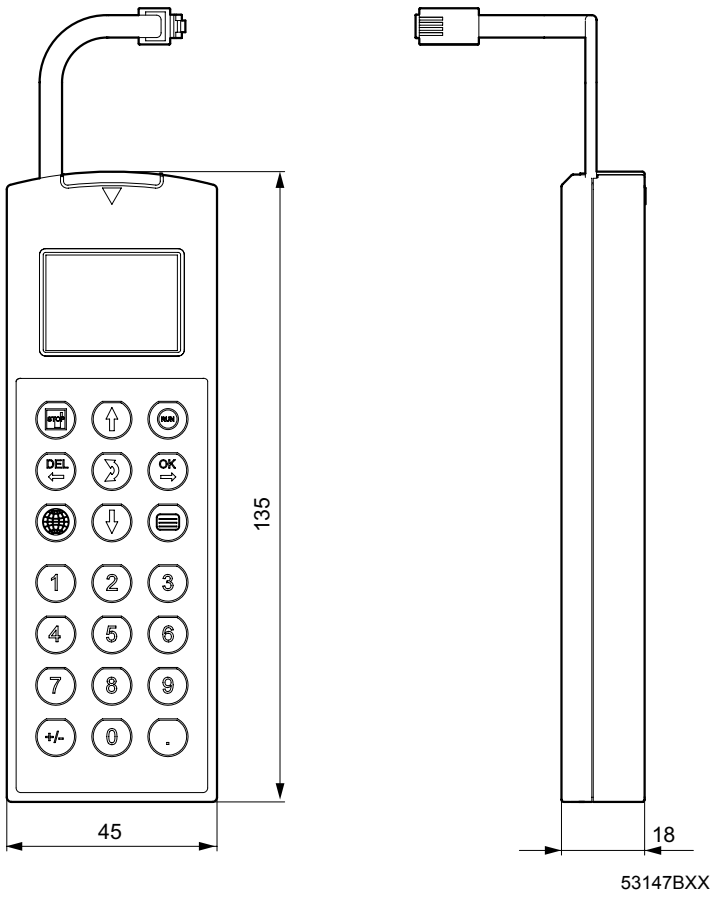

Key assignments for DBG60B

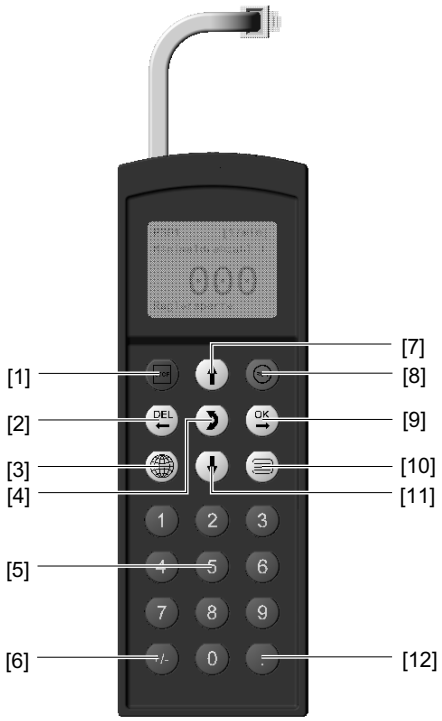

57483AXX

[1]	Stop
[2]	Delete previous entry
[3]	Language selection
[4]	Change menu
[5]	Numbers 0 … 9
[6]	Sign reversal
[7]	Up arrow, moves up to the next menu item
[8]	Start
[9]	OK, confirms the entry
[10]	Activate context menu
[11]	Down arrow, moves down to the next menu item
[12]	Decimal point

Selecting a language

The following text appears on the display when the keypad is switched on for the first time or after activating the start mode:

SEW
EURODRIVE

The symbol for language selection then appears on the display.

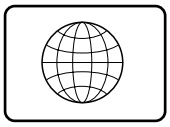

54533AXX

Select the desired language as follows:

- Press the [Language selection] key . A list of languages is displayed on the screen.
- Select the desired language with the [Up arrow] / [Down arrow] keys and confirm with the [OK] key.

The basic display is now shown in your chosen language.

Manual operation mode **Activation**

DANGER

The AS-interface control signal of the master is immediately effective when deactivating manual mode. If the AS-interface control signal D3 is set, the MOVIMOT® drive can unintentionally start when deactivating manual mode.

Severe or fatal injuries from crushing.

- Before activating manual mode, set the AS-interface control signal D3 of the master back (controller inhibit active).
- You may change the AS-interface control signal D3 only after deactivating manual mode.

Connect the DBG60B to the MOVIMOT® drive with integrated AS-interface (see page 59). The unit designation of the MOVIMOT® selected is displayed for a few seconds. The DBG60B then switches to the monitor mode.

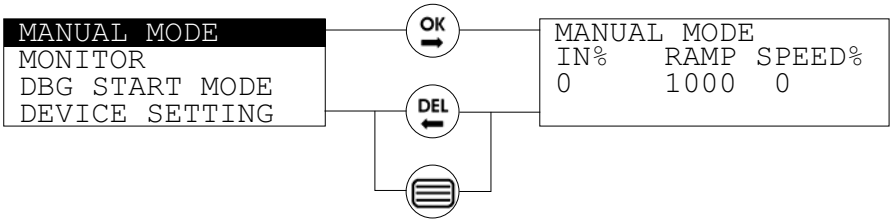

58359AXX

Change to manual operation mode as follows:

- Call up the context menu using the [Activate context menu] key .
- In the context menu, select the menu item [MANUAL MODE] using the [Up arrow] /[Down arrow] keys and confirm with the [OK] key .

The keypad is now in manual operation mode.

NOTE

You cannot change manual operation mode if the drive is enabled in automatic mode (bus operation).

In this case, the message "MANUAL MODE NOTE 17: INV. ENABLED" appears for 2 seconds and then the DBG60B returns to the context menu.

Display in manual operation mode

```
MANUAL MODE
In%        CW
0%         F1
        PO 0000
```

In%:	Output current in % of I_n
CW/CCW:	Selection of direction of rotation CW/CCW
F1/F2:	Selecting the setpoint F1/F2
24V operation:[1)]	24 V operation is active
PO[1)]:	Parameter bits display
Fault[1)]:	Fault code display

1) The lower line displays some of this information.

Operation

- To start the drive, select the [RUN] key.
- To stop the drive, select the [STOP] key.
- The rated motor current "I_n" is displayed in % during operation.
- To change the direction of rotation (CW/CCW), choose the [Up arrow] or [Down arrow].
- Change to setpoint change mode F1/F2 using the [Change menu] key.
- Choose the setpoint F1 or F2 using the [Up arrow] or [Arrow down] keys.

  If the setpoint F1 is selected, you can change the setpoint speed by changing the parameter bits (default value = 0000).
- Change to inputting parameter bits using the [Change menu] key.
- Set the parameter bits with the [Up arrow] or [Down arrow] or with the numbers "0" and "1" (see section "Scaling factors").
- To leave manual mode, choose the [Activate context menu] or [DEL] key.

DANGER

When you exit manual operation mode, you are prompted with "Activate automatic operation?". You can acknowledge this prompt by using the [OK] or [DEL] keys.

- You return to manual operation mode when you choose the [DEL] key.
- The AS-interface signals of the master are effective when you choose the [OK] key. If the AS-interface control signal D3 is set, the MOVIMOT® drive can unintentionally start.

Severe or fatal injuries from crushing.

- Before activating manual mode, set the AS-interface control signal D3 of the master back (controller inhibit active).
- You may change the AS-interface control signal D3 only after deactivating manual mode.

NOTE

If a fault occurs in manual mode, a fault window appears.

The status bar of the fault window displays alternatively the fault code and fault text. You can exit the fault window only by using the [OK] key.

If you choose the [OK] key, you trigger a reset during which the scaling factors are set to the default values.

Scaling factors

Scaling factors are used for scaling the setpoint speeds F1.

A scaling factor is only effective when it was selected by setting the corresponding parameter bits P3 to P0 in manual operation mode.

	Parameter bits			
	P3	**P2**	**P1**	**P0**
Scaling factor 0	0	0	0	0
Scaling factor 1	0	0	0	1
Scaling factor 2	0	0	1	0
. . .				
Scaling factor 14	1	1	1	0
Scaling factor 15	1	1	1	1

The decimal value of the scaling factors are divisors of setpoint speed F1.

Example:

- Parameter bits P3 to P0 = 0 0 0 0; i.e., scaling factor 0 is effective.
- Scaling factor 0 = 20

=> F1/20; i.e., the setpoint speed F1 is divided by 20.

The setpoint also depends on the setting of the setpoint potentiometer f1.

Example:

- F1 = 3000 rpm (setpoint potentiometer f1 at position 10)
- Parameter bits P3 to P0 = 0 0 0 0; i.e., scaling factor 0 is effective.
- Scaling factor 0 = 20

=> Stop setpoint = 3000 rpm/20 =150 rpm

Set scaling factors

Activation

Connect the DBG60B to the MOVIMOT® drive with integrated AS-interface. The unit designation of the MOVIMOT® selected is displayed for a few seconds. The DBG60B then switches to monitor mode.

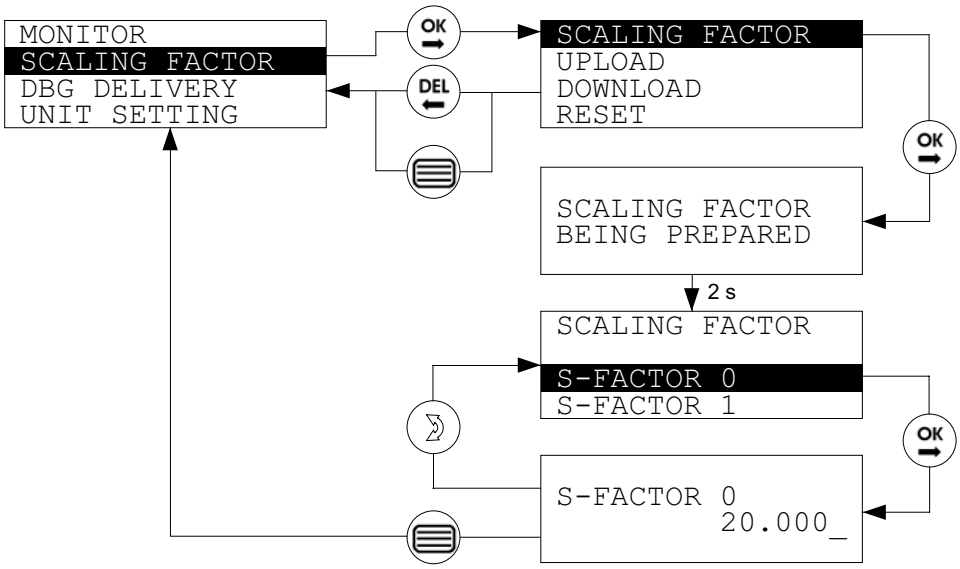

58747AXX

Change to scaling factor mode as follows:

- Call up the context menu using the [Activate context menu] key .
- Choose the [SCALING FACT.] menu item using the [Up arrow] / [Down arrow] keys and confirm with the [OK] key .

The keypad is now in scaling factor mode.

Scaling factor mode display

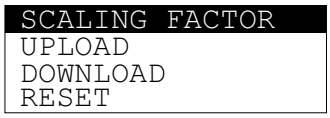

UPLOAD:	Load scaling factors from MOVIMOT® to DBG60B.
DOWNLOAD:	Load scaling factors from DBG60B to MOVIMOT®.
RESET:	Set scaling factors to the default values.

- Select the [UPLOAD] menu item and confirm with the [OK] key to load the scaling factors from the MOVIMOT® drive to the DBG60B keypad.
- Select the [DOWNLOAD] menu item and confirm with the [OK] key to load the scaling factors from the DBG60B keypad to MOVIMOT® drive.
- Choose the [RESET] menu item and confirm with the [OK] key to set the scaling factors to the default values.

You change the scaling factor of the setpoint speed as follows:

- Select the [SCALING FACT.] menu item and confirm with the [OK] key.
- Select the required scaling factor using the [Up arrow] / [Down arrow] keys and confirm with the [OK] key.

Change scaling factor display

S-FACTOR 0 20.000	S-Factor 0: 20.000:	Selected scaling factor Value of the scaling factor

- Change the value of the selected scaling factor with the [Up arrow] / [Down arrow] keys or enter the values with the [0] to [9] keys.

  Confirm the change by choosing the [OK] key.
- Choose the [Change menu] key to return to the selection of scaling factors.
- To exit scaling factor mode, choose the [Activate context menu] or [DEL] key.

12 Service

12.1 Fault list MOVIMOT® standard version

Status LED

The status LED is located on top of the MOVIMOT® inverter (see the following illustration).

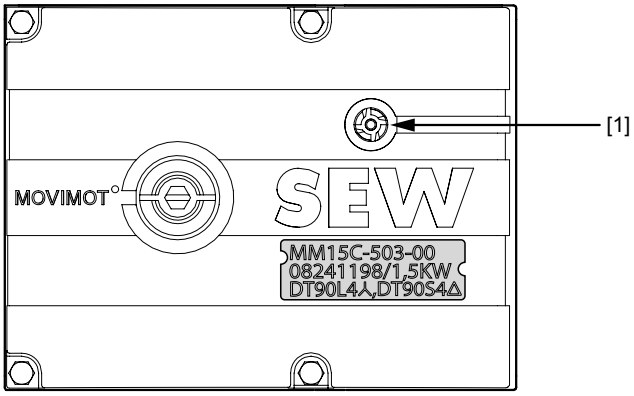

50867AXX

[1] MOVIMOT® status LED

Meaning of the LED statuses

The three-color LED signals the fault statuses.

LED Color	LED Status	Fault Code	Description
Red	2x flashing, break	Error 07	DC link voltage too high
Red	Flashing slowly	Fault 08	Error speed monitoring (only with S2/4 = "ON") or additional function 13 is active
		Fault 90 Fault 09	Assignment of motor – inverter incorrect (e.g., MM03 – DT71D4 △)
		Fault 17 to 24, 37	CPU error
		Faults 25, 94	EEPROM error
Red	3x flashing, break	Fault 01	Overcurrent in output stage
		Fault 11	Overtemperature in output stage
Red	4x flashing, break	Fault 84	Overtemperature in motor Assignment of motor – frequency inverter incorrect
Red	5x flashing, break	Fault 89	Overtemperature in brake Assignment of motor – frequency inverter incorrect
Red	6x flashing, break	Fault 06	Mains phase failure

The description of the operating status begins on page 149.

The description of the fault codes begins on page 168.

Fault list

Fault	Cause/Solution
Communication timeout (motor stops, without fault code)	• Missing connection Ø, RS+, RS- between MOVIMOT® and RS-485 master. Check and establish connection, especially earth. • EMC influence. Check shielding of data lines and improve, if necessary. • Incorrect type (cyclical) in acyclical data transfer, protocol time between the individual messages is higher than 1 s (timeout time). Check the number of MOVIMOT® units connected to the master (a maximum of 8 MOVIMOT® units can be connected as slaves for cyclic communication). Shorten message cycle or select message type "acyclical".
DC link voltage too low, mains off was detected (motor stops, without fault code)	Check supply system leads, supply voltage, and 24 V electronics supply voltage for interruption. Check the value of the 24 V electronics supply voltage (permissible voltage range 24 V ± 25%, EN 61131-2 residual ripple max. 13%) Motor automatically restarts as soon as the voltage reaches normal values.
Fault code 01 **Over-current in output stage**	Short circuit on inverter output. Check the connection between the inverter output and the motor as well as the motor winding for short circuits. Reset the fault by switching off the DC 24 V supply voltage or by resetting the fault.
Fault code 06 **Phase failure** (The fault can only be detected when the drive is loaded)	Check the supply system leads for phase failure. Reset the fault by switching off the DC 24 V supply voltage or by resetting the fault.
Fault code 07 **DC link voltage too high**	• Ramp time too short → Increase ramp time. • Faulty connection between brake coil/braking resistor → Check the connection between braking resistor/brake coil, and correct, if necessary. • Incorrect internal resistance of brake coil/braking resistor → Check the internal resistance of the brake coil/braking resistor (see section "Technical Data"). • Thermal overload in braking resistor → Incorrect size of braking resistor selected. • Impermissible voltage range of the supply input voltage → Check supply input voltage for permissible voltage range. Reset the fault by switching off the DC 24 V supply voltage or by resetting the fault.
Fault code 08 **Speed monitoring**	Speed monitoring was triggered, drive load is too high → Reduce the drive load. Reset the fault by switching off the DC 24 V supply voltage or by resetting the fault.
Fault code 11 **Thermal overload of the output stage or internal unit defect**	• Clean the heat sink. • Lower ambient temperature. • Prevent heat build-up. • Reduce the load on the drive. Reset the fault by switching off the DC 24 V supply voltage or by resetting the fault.
Fault codes 17 to 24, 37 **CPU error**	Reset the fault by switching off the DC 24 V supply voltage or by resetting the fault.
Fault codes 25, 94 **EEPROM error**	Reset the fault by switching off the DC 24 V supply voltage or by resetting the fault.
Fault code 84 **Thermal overload of motor**	• When the MOVIMOT® inverter is installed close to the motor, set DIP switch S1/5 to "ON". • For combinations of the "MOVIMOT® and motor with one lower power increment", check the setting of DIP switch S1/6. • Lower ambient temperature. • Prevent heat build-up. • Reduce the load on the motor. • Increase the speed. • Check the combination of the drive and MOVIMOT® frequency inverter if the fault is signaled shortly after the first enable. • The temperature monitoring in the motor (TH winding thermostat) was triggered when using MOVIMOT® with the selected additional function 5 → Reduce load on the motor. Reset the fault by switching off the DC 24 V supply voltage or by resetting the fault.

Fault	Cause/Solution
Fault code 89 **Thermal overload of brake coil or brake coil defect, brake coil incorrectly connected**	• Increase the set ramp time. • Brake inspection (see section "Inspection and Maintenance of the brake") • Check brake coil connection. • Contact SEW Service • If the fault is signaled shortly after the first enable, check the combination of the drive (brake coil) and MOVIMOT® frequency inverter. • For combinations of the "MOVIMOT® and motor with one lower power increment", check the setting of DIP switch S1/6. Reset the fault by switching off the DC 24 V supply voltage or by resetting the fault.

12.2 Diagnostics for MOVIMOT® standard version

Diagnostics using MDG11A option

05240AXX

- The MDG11A diagnostics unit must be connected prior to the possible occurrence of a fault, as MOVIMOT® fault messages are not saved and the information is consequently lost when the 24 V supply is disconnected.
- The MDG11A diagnostics unit may only be connected to a MOVIMOT®.
- Connecting the MDG11A diagnostics unit to an RS-485 bus with several MOVIMOT® units is not permitted.
- The MDG11A diagnostics unit can only be used if the MOVIMOT® is controlled using terminals. This requires that DIP switches S1/1 to S1/4 are set to OFF (= address 0).

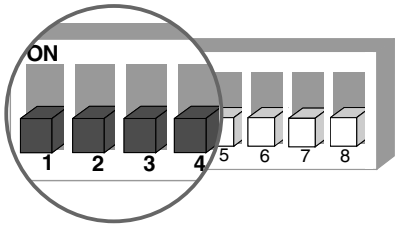

03125AXX

	NOTE
	Do not use the MDG11A diagnostics unit when setting the setpoint using the RS-485 interface.

- Check that the MOVIMOT® has been correctly connected according to section "Electrical Installation for MOVIMOT® Standard Version".
- The MDG11A diagnostics unit **cannot** be used in conjunction with MOVIMOT® with integrated AS-interface.

Diagnostics procedure

The diagnostics unit can display different information such as operating status, motor current, status of input terminals, and status of message relay and brake. The selection is made by choosing the key . If a fault occurs, the fault number is automatically displayed.

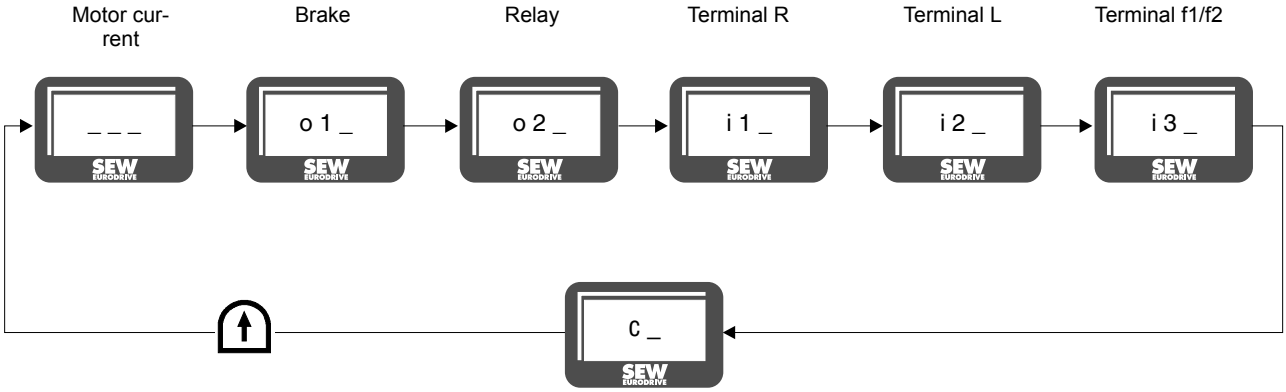

Operating status 05623AXX

Display		Meaning
Operating status	---	No communication; i.e., there is no 24 V at the MOVIMOT® or RS-485 connection is incorrect (interrupted or switched cable)
	c 0	Not ready; i.e., supply voltage is missing, but 24 V present
	c 2	Ready for operation; i.e., the supply voltage and 24 V are present, but there is no enable signal at terminal R or L
	c 4	Enabled, i.e. the motor turns
Fault codes	F01	Short circuit on inverter output
	F06	Mains phase failure
	F07	DC link voltage too high
	F11	Output stage thermal overload
	F84	Thermal overload of the motor or stalled motor
	F89	Thermal overload of the brake or internal resistance of the brake not correct
	F90	Assignment of motor to inverter incorrect (e.g. MM03 – DT71D4 △)
Motor current	0...180	Displays percentage of rated inverter current, from 0% to 180%
Brake	o10	Brake applied
	o11	Brake released
Relay	o20	Inverter not ready (no supply voltage or inverter is in "fault" status; see operating states or fault codes)
	o21	Inverter ready
Terminal R	i10	Terminal R = "0"
	i11	Terminal R = "1" = CW
Terminal L	i20	Terminal L = "0"
	i21	Terminal L = "1" = CCW
Terminal f1/f2	i30	Terminal f1/f2 = "0" = Setpoint f1 active
	i31	Terminal f1/f2 = "1" = Setpoint f2 active

12.3 Fault list MOVIMOT® with integrated AS-interface

Status LED

The status LED and AS-interface LED are located on top of the MOVIMOT® inverter (see the following illustration).

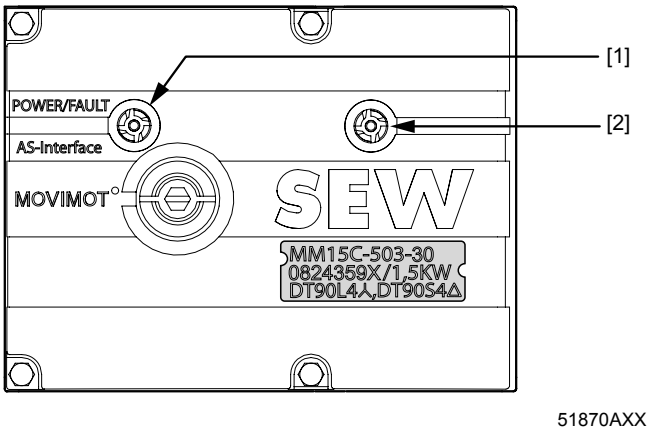

[1] AS-interface LED
[2] MOVIMOT® status LED

Meaning of the LED statuses

The three-color LED signals the operating and fault states.

LED Color	LED Status	Fault Code	Description
Red	2x flashing, break	Fault 07	DC link voltage too high
Red	Flashing slowly	Fault 08	Fault speed monitoring (only with S4/2 = "ON")
		Fault 90	Assignment of motor – inverter incorrect (e.g., MM03 – DT71D4 △)
		Fault 17 to 24, 37	CPU error
		Faults 25, 94	EEPROM error
Red	3x flashing, break	Fault 01	Over-current in output stage
		Fault 11	Overtemperature in output stage
Red	4x flashing, break	Fault 84	Overtemperature in motor Assignment of motor – frequency inverter incorrect
Red	5x flashing, break	Fault 89	Overtemperature in brake Assignment of motor – frequency inverter incorrect
Red	6x flashing, break	Fault 06	Mains phase failure

The description of the operating status begins on page 150.

The description of the fault codes are on page 173.

Fault list

Fault	Cause/Solution
DC link voltage too low, mains off was detected (motor stops, without fault code)	Check supply system leads and supply voltage for interruption. Motor restarts automatically as soon as the supply voltage reaches normal values.
Fault code 01 **Over-current in output stage**	Short circuit on inverter output. Check the connection between the inverter output and motor for short circuits. Reset the fault by switching off the DC 24 V supply voltage or by resetting the fault.
Fault code 06 **Phase failure** (The fault can only be detected when the drive is loaded)	Check the supply system lead for phase failure. Reset the fault by switching off the DC 24 V supply voltage or by resetting the fault.
Fault code 07 **DC link voltage too high**	• Ramp time too short → Increase ramp time. • Faulty connection between brake coil/braking resistor → Check the connection between braking resistor/brake coil, and correct, if necessary. • Incorrect internal resistance of brake coil/braking resistor → Check the internal resistance of the brake coil/braking resistor (see section "Technical Data"). • Thermal overload in braking resistor → Incorrect size of braking resistor selected. Reset the fault by switching off the DC 24 V supply voltage or by resetting the fault.
Fault code 08 **Speed monitoring**	Speed monitoring was triggered, drive is overloaded → Reduce drive load. Reset the fault by switching off the DC 24 V supply voltage or by resetting the fault.
Fault code 11 **Thermal overload of the output stage or internal unit defect**	• Clean the heat sink. • Lower ambient temperature. • Prevent heat build-up. • Reduce the load on the drive. Reset the fault by switching off the DC 24 V supply voltage or by resetting the fault.
Fault codes 17 to 24, 37 **CPU error**	Reset the fault by switching off the DC 24 V supply voltage or by resetting the fault.
Fault codes 25, 94 **EEPROM error**	Reset the fault by switching off the DC 24 V supply voltage or by resetting the fault.
Fault code 84 **Thermal overload of motor**	• When the MOVIMOT® inverter is installed close to the motor, set DIP switch S3/1 to "ON". • For combinations of the "MOVIMOT® and motor with one lower power increment", check the setting of DIP switch S3/2. • Lower ambient temperature. • Prevent heat build-up. • Reduce the load on the motor. • Increase the speed. • Check the combination of the drive and MOVIMOT® frequency inverter if the fault is signaled shortly after the first enable. Reset the fault by switching off the DC 24 V supply voltage or by resetting the fault.
Fault code 89 **Thermal overload of brake coil or brake coil defect**	• Increase the set ramp time. • Brake inspection (see section "Inspection and Maintenance of the brake") • Contact SEW Service • If the fault is signaled shortly after the first enable, check the combination of the drive (brake coil) and MOVIMOT® frequency inverter. • For combinations of the "MOVIMOT® and motor with one lower power increment", check the setting of DIP switch S3/2. Reset the fault by switching off the DC 24 V supply voltage or by resetting the fault.

12.4 MOVITOOLS® diagnostics for MOVIMOT® with integrated AS-interface

MOVIMOT® drives with integrated AS-interface contain a diagnostics interface for startup and service. This enables diagnostics, manual mode , and parameter setting by scaling factors with the SEW software MOVITOOLS® **(Version 4.0 and higher)**.

Start MOVITOOLS® diagnostics monitor

DANGER

When working on the unit, dangerous voltage levels may still be present up to one minute after the mains is disconnected.

Severe or fatal injuries from electric shock.

- Switch off the MOVIMOT® inverter, and secure it against unintentional restart.
- Then wait at least one minute.

WARNING

The surface temperature of the MOVIMOT® and the external options, for example, the braking resistor (in particular the heat sink) can reach high temperatures during operation.

Burn risk

- Touch the MOVIMOT® drive and the external options only when they have sufficiently cooled.

1. Remove the screws on the MOVIMOT® inverter and remove the MOVIMOT® inverter.

2. Remove one closing plug on the MOVIMOT® terminal box.

3. Connect RJ10 plug connecter with the X50 socket. To do this, lead the cable through the open cable entry. As an alternative, you can also connect it with the AYUD adapter (optional) (see starting on page 60).

4. Set the MOVIMOT® inverter on the terminal box and screw it on.

NOTE

When you use this connection option, the MOVIMOT® drive no longer has the enclosure that can be referenced in the section "Technical Data".

5. Switch off the electronics supply voltage

6. Start the MOVITOOLS® Manager on the PC. The following window opens:

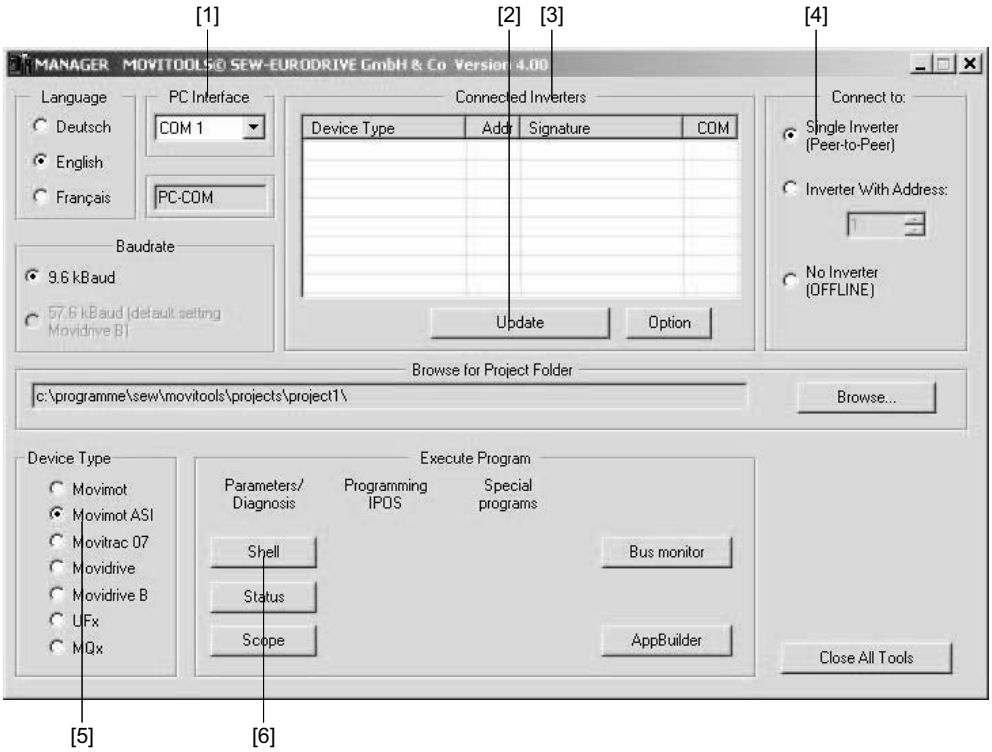

59626AXX

7. Choose the serial interface used in your PC from the dropdown menu "PC-COM" [1].

8. Activate the button [Single Inverter (Peer-to-Peer)] [4] in the group "Connect to".

9. The MOVIMOT® used by you appears in the window "Connected Inverters" [3] after clicking the button [Update] [2]. If no device is displayed, check the communication connection.

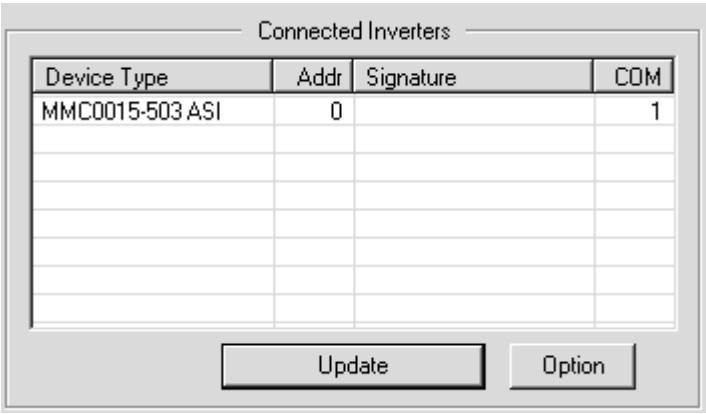

59627AXX

10. Activate the button [MOVIMOT ASI] [5] in the group "Device Type".

11. The surface for diagnostics, manual mode, and parameter setting of the scaling factors (Shell) as well as a status window opens by clicking the button [Shell] [6].

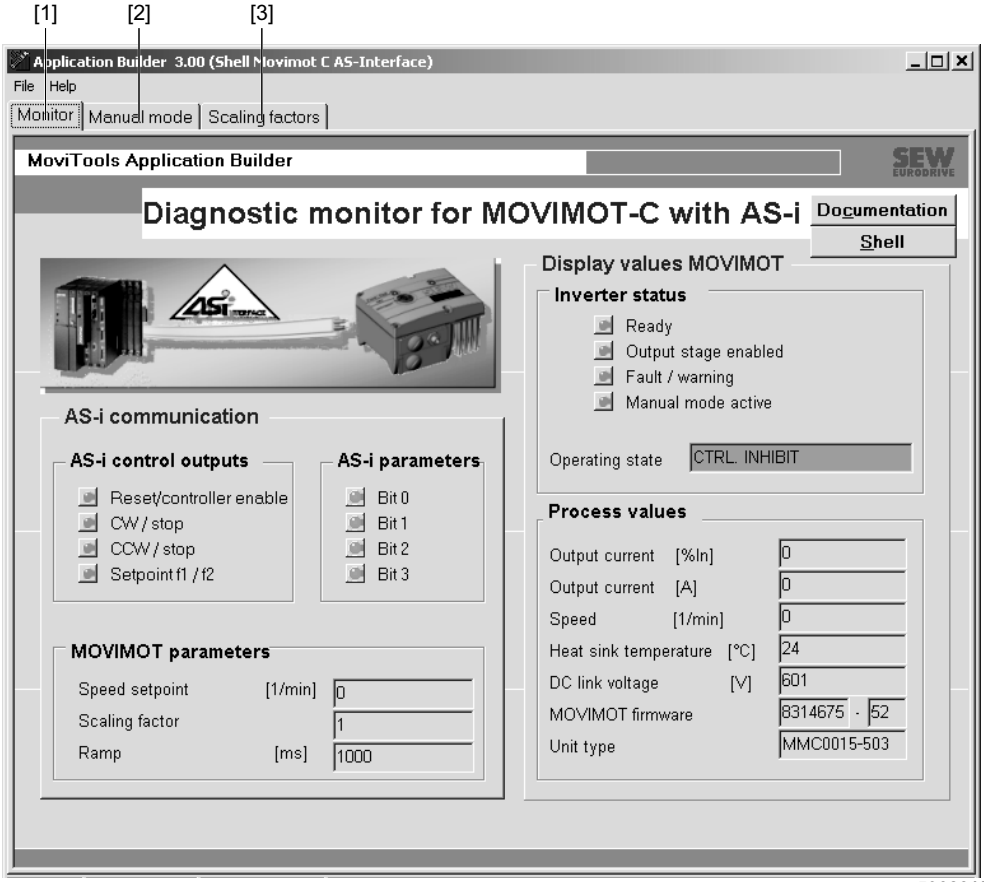

59628AXX

12. You can switch between the tab pages of the program by using the buttons [Monitor] [1], [Manual mode] [2], and [Scaling factors] [3] assigned in the upper left area of the window. For additional information on the tab pages "Manual mode" and "Scaling factors", refer to the section "Advanced startup with MOVITOOLS®", starting on page 132.

"Monitor" tab page description

The following figure shows the diagnostic monitor:

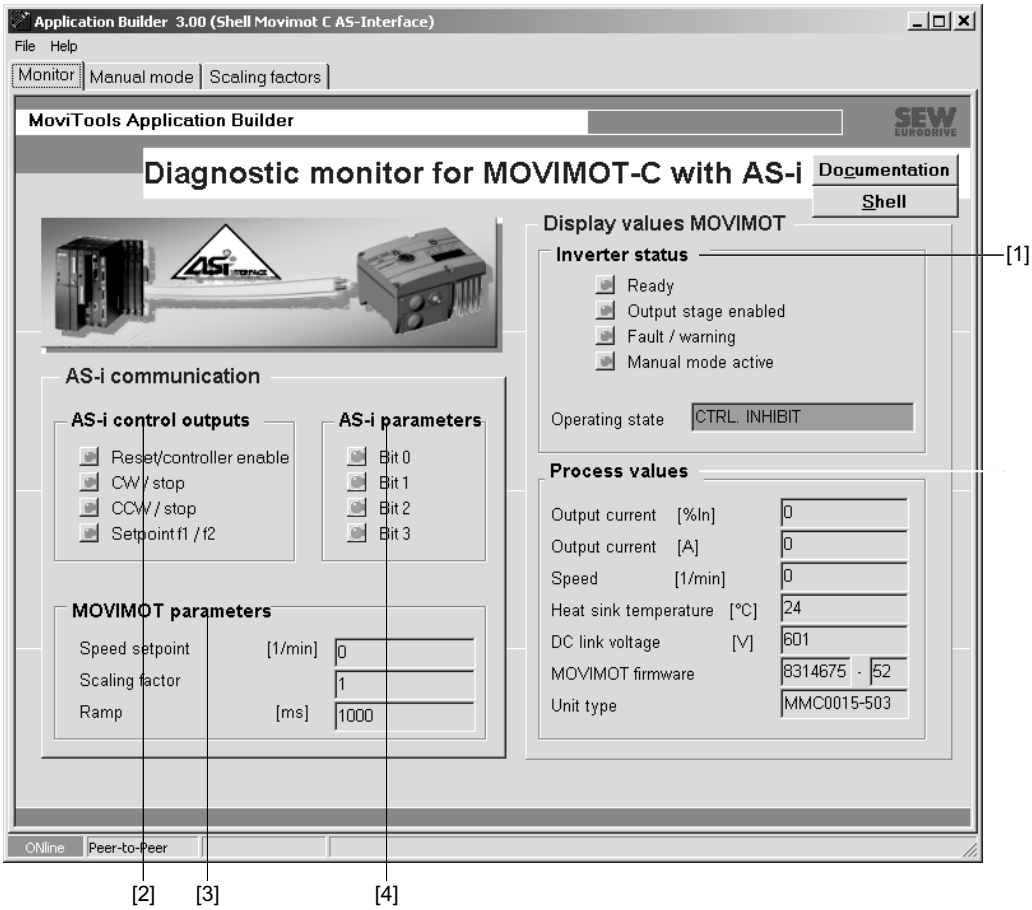

59639AXX

- The "Inverter status" [1] window area displays important information about the status of the AS-interface.
- In the window area "AS-i control outputs" [2], the current status of the AS-interface bits "D0 (CW/stop)", "D1 (CCW/stop)", "D1 (CCW/stop)", "D2 (Setpoint f1/f2)" and "D3 (Reset/controller inhibit)" are displayed. An AS-interface bit set by the master is represented by a green symbol.
- The current status of the AS-interface parameter bits is displayed in the window area "AS-i parameters) [4]. The scaling factor is selected by these bits. An AS-interface parameter bit set by the master is represented by a green symbol.
- .In the window area "MOVIMOT parameters" [3], information is displayed using the current speed setpoint, the active (using AS-interface parameter bits) scaling factor selected, and the ramp time selected by the switch t1.

Window area "Display values MOVIMOT"

The "Inverter status" window area displays the current unit status. In the following example, the unit is ready [1], the output stage is enabled [2], and manual mode is active [3]. The operating state [4] is displayed in plain text representation.

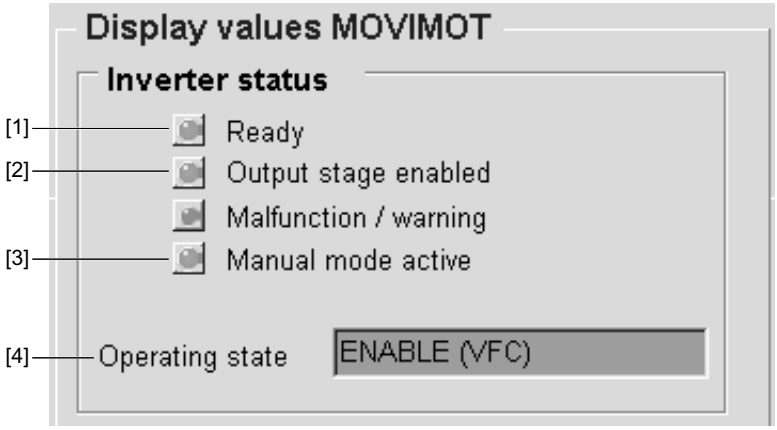

59640AXX

If a unit fault occurs, this is represented by a red icon "Fault/warning" and the cause of error is displayed in the field "Operating state" [4].

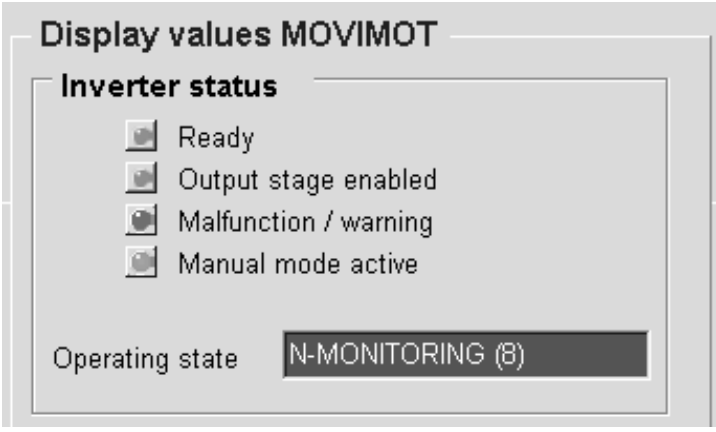

59641AXX

Window area "Process values"

In the window area "Process values", the current output current (effective value), the speed, the heat sink temperature, the DC link voltage, and information on the firmware part number and unit type are displayed.

12.5 Inspection and maintenance intervals

DANGER

When working on the unit, dangerous voltage levels may still be present up to one minute after the mains is disconnected.

Severe or fatal injuries from electric shock.

- Switch off the MOVIMOT® inverter, and secure it against unintentional restart.
- Then wait at least one minute.

WARNING

The surface temperature of the MOVIMOT® and the external options, for example, the braking resistor (in particular the heat sink) can reach high temperatures during operation.

Burn risk

- Touch the MOVIMOT® drive and the external options only when they have sufficiently cooled.

DANGER

Risk of fatal injury if the hoist falls.

Severe or fatal injuries.

- MOVIMOT® is not designed for use as a safety device in hoist applications. Use monitoring systems or mechanical protection devices to ensure safety.

Use only genuine spare parts in accordance with the valid parts list.

Unit/component	Interval	What to do?
Brake BMG05 – BMG4	• **If used as a working brake:** At least every 3000 hours of operation[1)] • **If used as a holding brake:** Every 2 to 4 years, depending on operating conditions[1)]	Inspecting the brake: • Measure thickness of the brake disc • Brake disc, lining • Measure and set working air gap • Pressure plate • Driver/gearing • Pressure ring • Vacuum up the abraded matter. • Inspect the switch elements and change if necessary (e.g. in case of burn-out).
Motor	• **Every 10,000 hours of operation**	Inspect motor: • Check ball bearings and change if necessary • Change the oil seal • Clean cooling air passages
Motor with backstop		• Change the low-viscosity grease of the backstop
Drive	• Varying (depending on external factors)	• Touch up or renew the surface/ anti-corrosion coating

1) The amount of wear is affected by many factors and the service life may be short. The machine designer must calculate the required inspection/maintenance intervals individually in accordance with the project planning documents (e.g. Drive Planning).

12.6 Inspection maintenance of the motor

Example: DFT90 Motor /MOVIMOT®

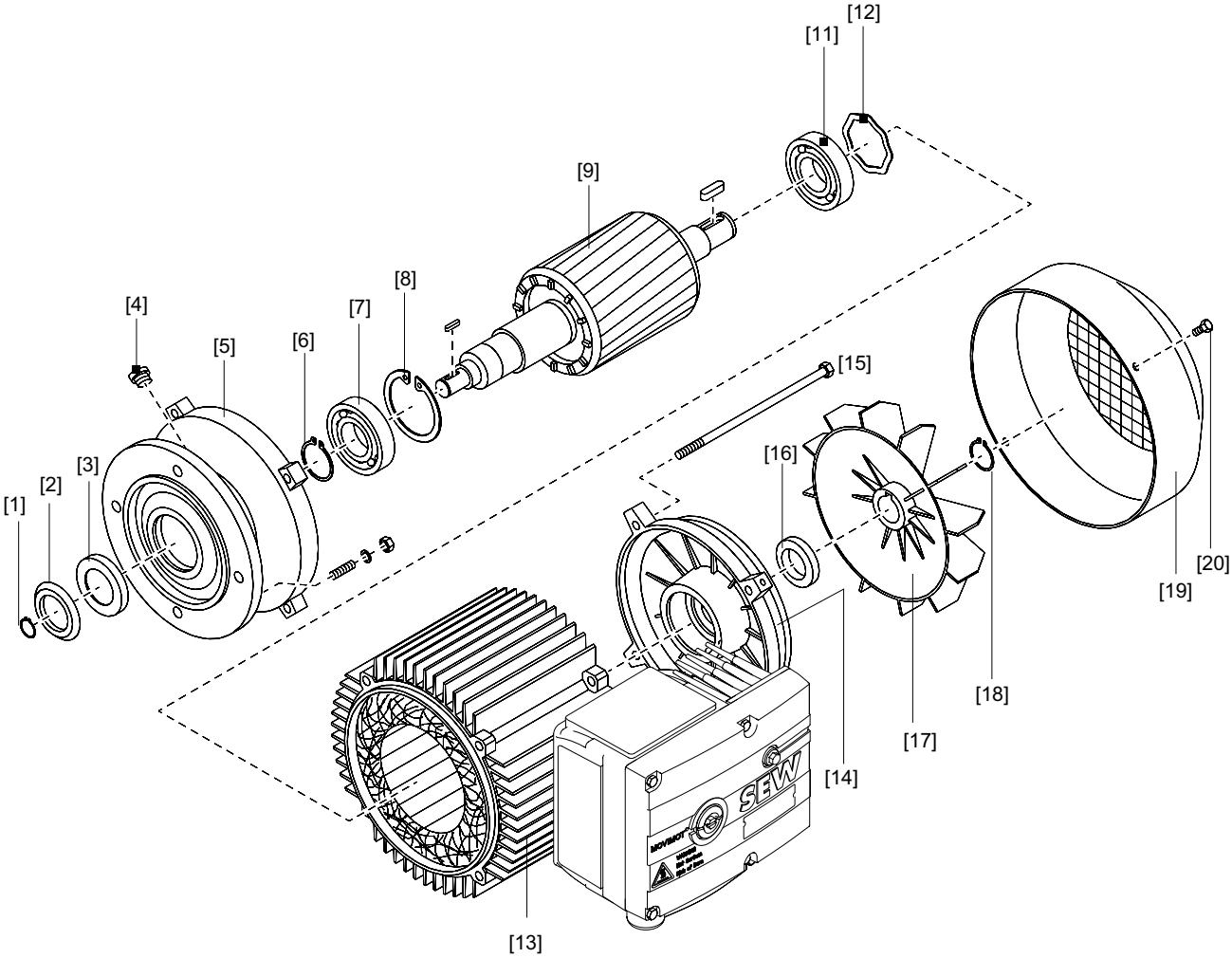

[1]	Circlip
[2]	Oil flinger
[3]	Oil seal
[4]	Screw plug
[5]	Drive end bearing shield (flange)
[6]	Circlip
[7]	Ball bearing
[8]	Circlip
[9]	Rotor
[11]	Ball bearing
[12]	Equalizing ring
[13]	Stator
[14]	Non drive-end bearing shield
[15]	Hex head screw
[16]	V-ring
[17]	Fan
[18]	Circlip
[19]	Fan guard
[20]	Retaining screw

Inspecting the motor

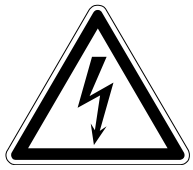

DANGER

When working on the unit, dangerous voltage levels may still be present up to one minute after the mains is disconnected.

Severe or fatal injuries from electric shock.

- Switch off the MOVIMOT® inverter, and secure it against unintentional restart.
- Then wait at least one minute.

1. Remove the forced cooling fan and encoder, if fitted.
2. Remove flange or fan guard [19], fan [17].
3. Remove the hexa head screws [15] from the drive end bearing end shield [5] and the non-drive end bearing shield [14], release the stator [13] from the drive end bearing shield.
4. **For motors with a BMG brake:**
   – Open the terminal box cover, and unfasten the brake cable from its terminals.
   – Press off the non drive-end bearing shield with brake from the stator, lift it off carefully (feed brake cable using the trailing wire if necessary).
   – Pull the stator back by approx. 3 to 4 cm.
5. Visual inspection:

   Is there any moisture or gear unit oil inside the stator?
   – If not, continue with step 8.
   – If there is condensation, continue with step 6.
   – If there is gear oil, have the motor repaired by a specialist workshop.
6. If there is moisture inside the stator:
   – With gearmotors: Remove the motor from the gear unit.
   – With motors without a gear unit: Remove the drive end flange
   – Remove the rotor [9]
7. Clean the winding, dry it, and check it electrically.
8. Replace the ball bearings [7] and [11] (only use authorized ball bearings, see section "Permitted ball bearing types").
9. Reseal the stator seat (surface sealing compound "Hylomar L Spezial") and grease the V-ring
10. Install the motor, brake, and accessories.
11. Check the gear unit (see the gear unit operating instructions).

Lubrication of the backstop

The backstop is supplied with Mobil LBZ low-viscosity grease as a lubricant and anticorrosion protection. If you want to use different grease, make sure it complies with NLGI class 00/000, with a base oil viscosity of 42 mm^2/s at 40°C (104°F) and with a lithium saponified and mineral oil base. The application temperature range is from –50°C to +90°C (–58°F to +194°F). See the following table for the amount of grease required.

Motor type	71/80	90/100
Grease [g]	9	15

12.7 Inspection and maintenance work on the brake

Brake BMG05 – BMG4

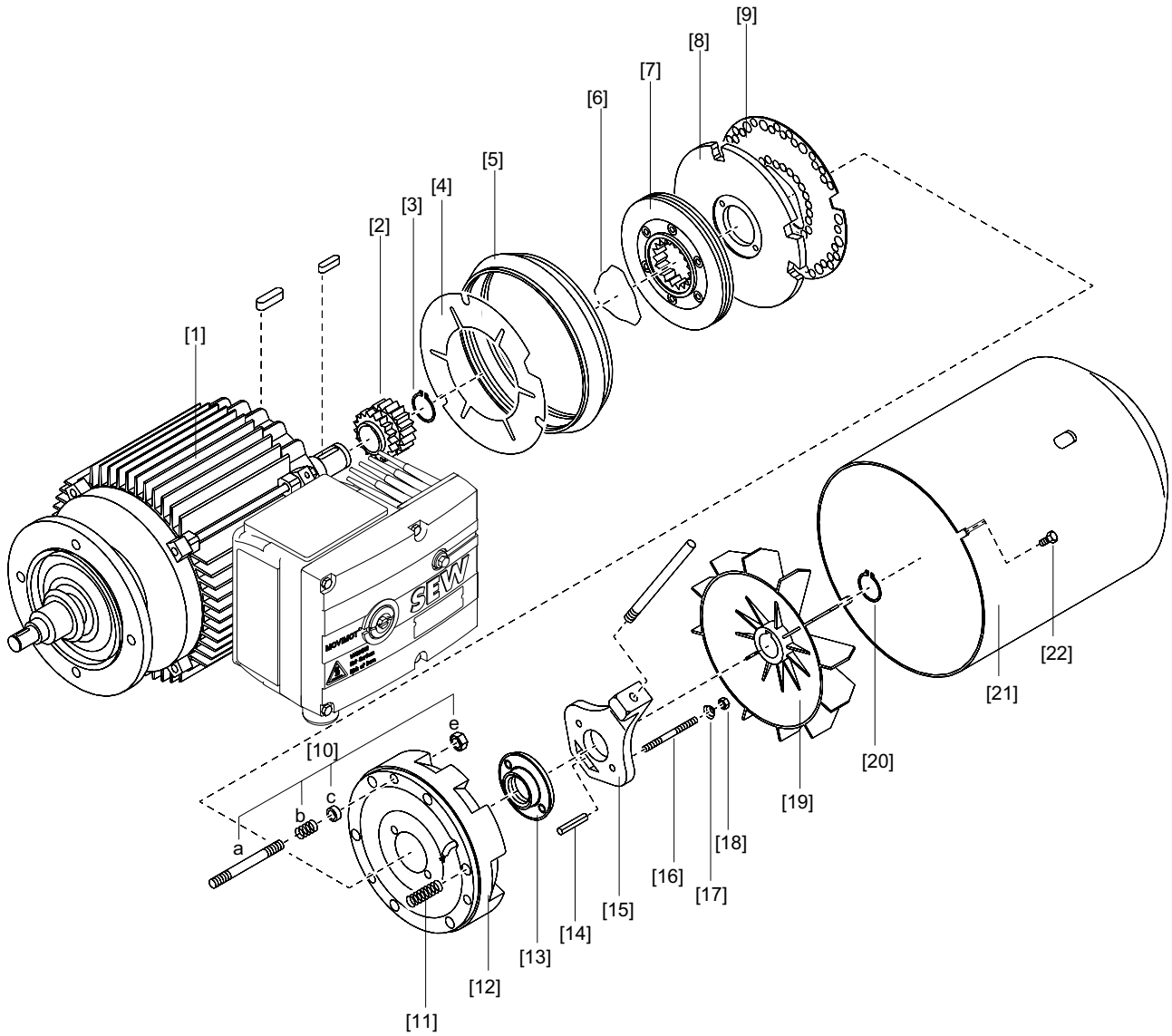

[1]	Motor with brake bearing end shield	[11]	Brake spring
[2]	Driver	[12]	Brake coil body
[3]	Circlip	[13]	Sealing washer
[4]	Niro disk	[14]	Dowel pin
[5]	Rubber sealing collar	[15]	Release lever with hand lever
[6]	Circular spring	[16]	Stud (2x)
[7]	Brake disc	[17]	Conical coil spring
[8]	Pressure plate	[18]	Setting nut
[9]	Damping plate (BMG only)	[19]	Fan
[10a]	Stud (3x)	[20]	Circlip
[10b]	Counter spring	[21]	Fan guard
[10c]	Pressure ring	[22]	Housing screw
[10e]	Hexagonal nut		

Inspecting the BMG05-BMG4 brake, setting the working air gap

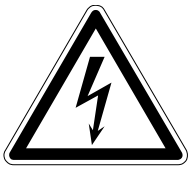	**DANGER** When working on the unit, dangerous voltage levels may still be present up to one minute after the mains is disconnected. Severe or fatal injuries from electric shock. • Switch off the MOVIMOT® inverter, and secure it against unintentional restart. • Then wait at least one minute.

1. Remove the following:
   – Forced cooling fan and encoder, if necessary
   – Flange cover or fan guard [21]
2. Push the rubber sealing collar [5] aside.
   – Release the clamp to do this, if necessary.
   – Vacuum up the abraded matter.
3. Measure the brake disk [7]:
   If the brake disk is
   – ≤ 9 mm on brake motors up to size 100
   Replace brake disk (see section "Changing the brake disk BMG05-BMG4").
4. Measure the working air gap A (see the following figure)
   (use a feeler gauge and measure at three points offset by 120°):
   – With BMG, between the pressure plate [8] and the damping plate [9]
5. Tighten the hex nuts [10e]:
   – Until the working air gap is set correctly (see section "Technical Data")
6. Install the rubber sealing collar back in place and re-install the dismantled parts

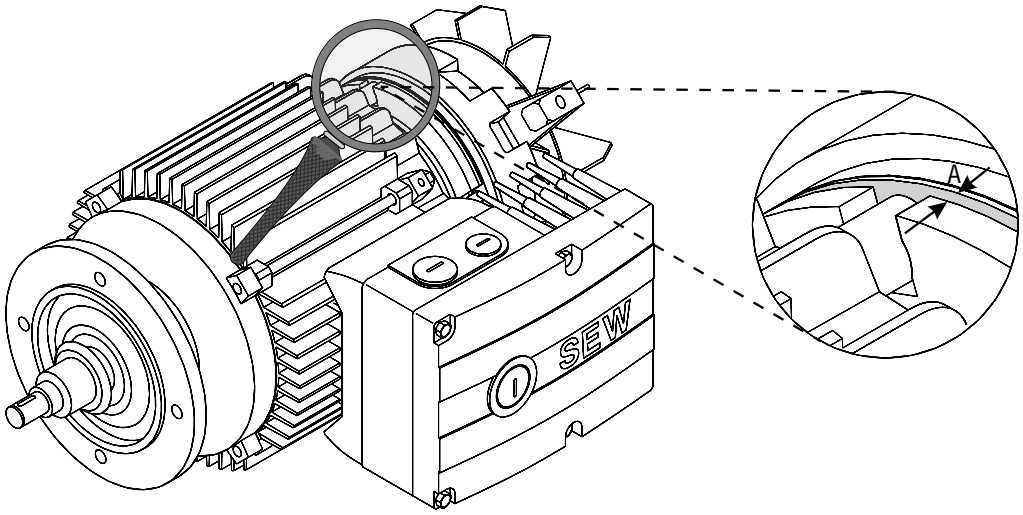

02577AXX

Replacing the BMG05–BMG4 brake disk

When fitting a new brake disk (in BMG05-BMG4 £ 9 mm) inspect the other removed parts as well, and replace if necessary.

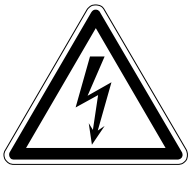

DANGER

When working on the unit, dangerous voltage levels may still be present up to one minute after the mains is disconnected.

Severe or fatal injuries from electric shock.

- Switch off the MOVIMOT® inverter, and secure it against unintentional restart.
- Then wait at least one minute.

1. Remove the following:
   – Forced cooling fan and encoder if necessary
   – Flange or fan guard [21], circlip [20] and fan [19].
2. Remove the rubber sealing collar [5] and the manual brake release:
   – Setting nuts [18], conical coil springs [17], studs [16], release lever [15], dowel pin [14]
3. Unscrew hex nuts [10e], carefully pull off the brake coil body [12] (brake cable!) and remove the brake springs [11].
4. Remove the damping plate [9], pressure plate [8], and brake discs [7], and clean the brake components
5. Install a new brake disk
6. Re-install the brake components
   – Except for the rubber sealing collar, fan, and fan guard.
7. Set the working air gap (see section "Inspecting the BMG05-MBG4 brake, setting the working air gap", points 4 to 6).
8. With manual brake release: Use setting nuts to set the floating clearance "s" between the conical coil springs (pressed flat) and the setting nuts (see the following figure).

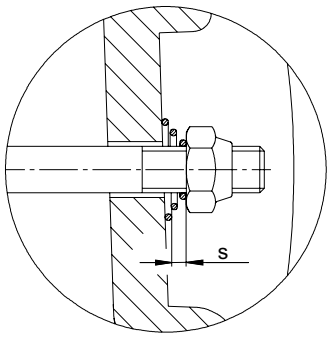

06495AXX

Brake	Floating clearance s [mm]
BMG05 – BMG1	1.5
BMG2 – BMG4	2

WARNING

The floating clearance "s" is necessary so that the pressure plate can move up as the brake lining wears. Otherwise, reliable braking is not guaranteed.

Severe or fatal injuries from crushing.

- Set the floating clearance "s" as described.

9. Install the rubber sealing collar back in place and re-install the dismantled parts.

	NOTES
	• The lockable manual brake release (type HF) is already released if resistance is encountered when operating the grub screw. • Resetting manual brake release (type HR) can be operated with normal hand pressure.

	WARNING
	In brake motors with resetting manual brake release, the hand lever must be removed after startup/maintenance. Severe injuries from crushing. • Remove hand lever prior to startup/maintenance. A holding fixture is provided for safekeeping on the outside of the motor.

Changing the BMG05–BMG4 braking torque

The braking torque can be changed in steps (see section "Technical Data"):

- By installing different brake springs
- By changing the number of brake springs
- By changing the brake coil body:
  - **BMG05:** If the maximum braking torque is not sufficient for the specific application, install the brake coil body [12] of brake BMG1 of the same design in order to ensure safe braking.
  - **BMG2:** If the maximum braking torque is not sufficient for the specific application, install the brake coil body [12] of brake BMG4 of the same design in order to ensure safe braking.

⚠ DANGER

When working on the unit, dangerous voltage levels may still be present up to one minute after the mains is disconnected.

Severe or fatal injuries from electric shock.

- Switch off the MOVIMOT® inverter, and secure it against unintentional restart.
- Then wait at least one minute.

1. Remove the following:
   - Forced cooling fan and encoder if necessary
   - Flange or fan guard [21], circlip [20] and fan [19].
2. Remove the rubber sealing collar [5] and the manual brake release:
   - Setting nuts [18], conical coil springs [17], studs [16], release lever [15], dowel pin [14]
3. Unscrew hex nuts [10e], pull off the brake coil body [12]
   - by approx. 50 mm (watch the brake cable!)
4. Change or add brake springs [11].
   - Position the brake springs symmetrically.
5. Re-install the brake components.
   - Except for the rubber sealing collar, fan and fan guard, set the working air gap (see section "Inspecting brake BMG05–BMG4", points 4 to 6).

6. With manual brake release: Use setting nuts to set the floating clearance "s" between the conical coil springs (pressed flat) and the setting nuts (see the following figure).

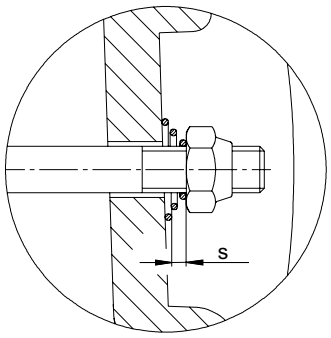

06495AXX

Brake	Floating clearance s [mm]
BMG05 – BMG1	1.5
BMG2 – BMG4	2

WARNING

The floating clearance "s" is necessary so that the pressure plate can move up as the brake lining wears. Otherwise, reliable braking is not guaranteed.

Severe or fatal injuries from crushing.

- Set the floating clearance "s" as described.

7. Install the rubber sealing collar back in place and re-install the dismantled parts.

NOTE

Replace setting nuts [18] and hexagon nuts [10e] if disassembly is repeated.

12.8 SEW service

If a fault cannot be solved, please contact SEW service (see section "Address List").

When contacting SEW service, always provide the following:

- Service code [1]
- Serial number [2]
- Part number [3]
- Type designation (inverter nameplate [4] + motor nameplate [5])
- Plant number [6]
- Short description of application (application, control using terminals or serial)
- Nature of the fault
- Accompanying circumstances (e.g. initial startup)
- Your own presumptions as to what has happened
- Any unusual events preceding the problem, etc.

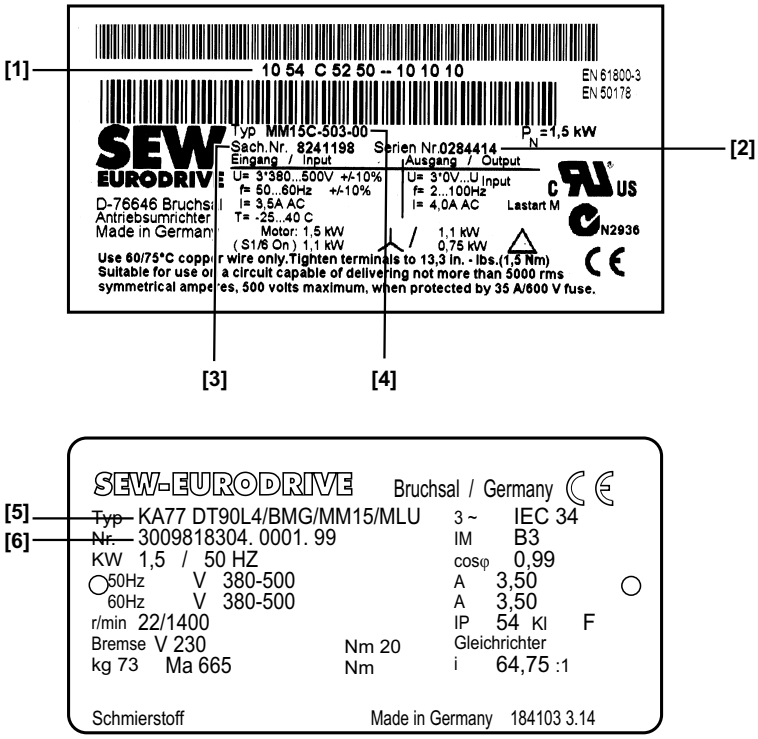

12.9 Extended storage

If the unit is being stored for a long time, connect it to the mains voltage for at least 5 minutes every 2 years. Otherwise, the unit's service life may be reduced.

Procedure when maintenance has been neglected:

Electrolytic capacitors are used in the inverters that are subject to aging effects when de-energized. This effect can damage the electrolytic capacitors if the unit is connected using the rated voltage after a longer period of storage.

If you have not performed maintenance regularly, SEW-EURODRIVE recommends that you increase the supply voltage slowly up to the maximum voltage. This can be done, for example, by using a variable transformer for which the output voltage has been set according to the following overview. We recommend that you increase the voltage from 0 V to the first stage after a few seconds.

The following stages are recommended:

AC 400/500 V units:

- Stage 1: AC 350 V for 15 minutes
- Stage 2: AC 420 V for 15 minutes
- Stage 3: AC 500 V for 1 hour

After you have completed the regeneration process, the unit can be used immediately or stored again for an extended period with maintenance.

12.10 Waste disposal

This product consists of:

- Iron
- Aluminum
- Copper
- Plastic
- Electronic components

Dispose of all components in accordance with applicable regulations.

13 Technical Data: MOVIMOT® Standard Version

13.1 Motor with operating point 400 V/50 Hz or 400 V/100 Hz

MOVIMOT® type **Part Number**		**MM 03C-503-00** **824 115 5**	**MM 05C-503-00** **824 116 3**	**MM 07C-503-00** **824 117 1**	**MM 11C-503-00** **824 118 X**	**MM 15C-503-00** **824 119 8**	**MM 22C-503-00** **824 120 1**	**MM 30C-503-00** **824 121 X**	**MM 3XC-503-00** **824 180 5**
Apparent output power at V_{mains} = AC 380...500 V	S_N	1.1 kVA	1.4 kVA	1.8 kVA	2.2 kVA	2.8 kVA	3.8 kVA	5.1 kVA	6.7 kVA
Supply voltages **Permitted range**	V_{mains}	3 x AC 380 V/**AC 400 V**/AC 415 V/AC 460 V/AC 500 V V_{mains} = AC 380 V _10% … AC 500 V +10%							
Supply frequency	f_{mains}	50 Hz … 60 Hz ± 10%							
Rated mains current (at V_{mains} = AC 400 V)	I_{mains}	1.3 A_{AC}	1.6 A_{AC}	1.9 A_{AC}	2.4 A_{AC}	3.5 A_{AC}	5.0 A_{AC}	6.7 A_{AC}	8.6 A_{AC}
Output voltage	V_A	0...V_{mains}							
Output frequency **Resolution** **Operating point**	f_A	2…100 Hz 0.01 Hz 400 V at 50 Hz/100 Hz							
Rated output current	I_N	1.6 A_{AC}	2.0 A_{AC}	2.5 A_{AC}	3.2 A_{AC}	4.0 A_{AC}	5.5 A_{AC}	7.3 A_{AC}	9.6 A_{AC}
Motor power S1	P_{Mot}	**0.37 kW**	**0.55 kW**	**0.75 kW**	**1.1 kW**	**1.5 kW**	**2.2 kW**	**3.0 kW**	**3.0 kW**
Motor power S3 25% cdf									**4.0 kW**
PWM frequency		**4 (factory setting)**/8/16[1] kHz							
Current limitation	I_{max}	**motor:** 160% with W and m **Regenerative:** 160% with W and m							
Maximum motor cable length		15 m when install near the motor MOVIMOT® frequency inverter (with SEW hybrid cable and option P2.A)							
External braking resistor	R_{min}	150 W					68 W		
Interference immunity		Conforms to EN 61800-3							
Interference emission		Meets EN 61800-3 and class A limit to EN 55011 and EN 55014							
Ambient temperature	ϑ_U	**–25°C…+40°C** (**–13°F…+104°F**) (P_N reduction: 3% I_N per K up to max. 60°C (140°F))							[2]
Storage temperature[3]		–25°C…+85°C (–13°F…+185°F) (EN 60721-3-3, class 3K3)							
Maximum permissible oscillation and impact load		Meets EN 50178							
Enclosure (motor-dependent)		IP54, IP55, IP65, IP66 (options, specify when ordering) IP67 (only possible for inverter with terminal box)							
Operating mode		S1 (EN 60149-1-1 and 1-3), S3 max. cycle duration 10 minutes							
Type of cooling (DIN 41751)		Self-cooling							
Installation altitude		h ≤ 1000 m (P_N reduction: 1% per 100 m starting at 1000 m altitude, also see section 6.1)							
Required preventive measures		Ground the unit							

MOVIMOT® type Part Number		MM 03C-503-00 824 115 5	MM 05C-503-00 824 116 3	MM 07C-503-00 824 117 1	MM 11C-503-00 824 118 X	MM 15C-503-00 824 119 8	MM 22C-503-00 824 120 1	MM 30C-503-00 824 121 X	MM 3XC-503-00 824 180 5
External electronics supply	Tl. 24 V	V = +24 V ± 25%, EN 61131-2, residual ripple max. 13% $I_E \leq$ 250 mA, (type 150 mA at 24 V), input capacity 100 µF							
Three binary inputs		Isolated using opto-coupler; PLC compatible (EN 61131-2) $R_i \approx$ 3.0 kW, $I_E \approx$ 10 mA, sampling interval £ 5 ms							
Signal level		+13 V…+30 V = "1" = Contact closed –3 V…+5 V = "0" = Contact open							
Control functions	Tl. R ↻ Tl. L ↺ Tl.f1/f2	CW/stop CCW/stop "0" = setpoint 1/"1" = setpoint 2							
Output relay **Contact information**	Tl. K1a Tl. K1b	Response time £ 15 ms DC 24 V/DC 0.6 A/DC12 in accordance to 60947-5-1 (only SELV or PELV circuit)							
Signaling function		NO contact for ready signal			Contact closed: – With voltage present (24 V + mains) – In case no error was detected – At end of self-testing phase (when unit is turned on)				
Serial interface	Tl. RS+ Tl. RS-	RS-485							

1) 16 kHz PWM frequency (low-noise): When DIP SWITCH S1/7 = ON, the units operate with a 16 kHz PWM frequency (low noise) and switch back in steps to lower switching frequencies depending on the heat sink temperature.

2) –25°C…+40°C (–13°F…+104°F) with S3 25% cdf (up to 60°C (140°F) with S3 10% cdf)

3) If the unit is being stored for a long time, connect it to the mains voltage for at least 5 minutes every 2 years. Otherwise, the service life of the unit may be reduced.

13.2 Motor with operating point 460 V/60 Hz

MOVIMOT® unit type Part Number		MM 03C-503-00 824 115 5	MM 05C-503-00 824 116 3	MM 07C-503-00 824 117 1	MM 11C-503-00 824 118 X	MM 15C-503-00 824 119 8	MM 22C-503-00 824 120 1	MM 30C-503-00 824 121 X	MM 3XC-503-00 824 180 5
Apparent output power at V_{mains} = AC 380...500 V	S_N	1.1 kVA	1.4 kVA	1.8 kVA	2.2 kVA	2.8 kVA	3.8 kVA	5.1 kVA	6.7 kVA
Supply voltages Permitted range	V_{mains}	3 x AC 380 V/**AC 400 V**/AC 415 V/AC 460 V/AC 500 V V_{mains} = AC 380 V _10% … AC 500 V +10%							
Supply frequency	f_{mains}	50 Hz ... 60 Hz ± 10%							
Rated mains current (at V_{mains} = AC 460 V)	I_{mains}	1.1 A_{AC}	1.4 A_{AC}	1.7 A_{AC}	2.1 A_{AC}	3.0 A_{AC}	4.3 A_{AC}	5.8 A_{AC}	7.5 A_{AC}
Output voltage	V_A	0...V_{mains}							
Output frequency Resolution Operating point	f_A	2…100 Hz 0.01 Hz 460 V at 60 Hz							
Rated output current	I_N	1.6 A_{AC}	2.0 A_{AC}	2.5 A_{AC}	3.2 A_{AC}	4.0 A_{AC}	5.5 A_{AC}	7.3 A_{AC}	9.6 A_{AC}
Motor power	P_{Mot}	**0.5 HP 0.37 kW**	**0.75 HP 0.55 kW**	**1.0 HP 0.75 kW**	**1.5 HP 1.1 kW**	**2 HP 1.5 kW**	**3.0 HP 2.2 kW**	**5 HP 3.7 kW**	**5.4 HP** [1] **4 kW**
PWM frequency		**4 (factory setting)**/8/16[2] kHz							
Current limitation	I_{max}	**Motor:** 160% with W **Regenerative:** 160% with W							
Maximum motor cable length		15 m when install near the motor MOVIMOT® frequency inverter (with SEW hybrid cable and option P2.A)							
External braking resistor	R_{min}	150 W					68 W		
Interference immunity		Conforms to EN 61800-3							
Interference emission		Meets EN 61800-3 and class A limit to EN 55011 and EN 55014							
Ambient temperature	ϑ_U	**–25°C…+40°C** (**–13°F…+104°F**) (P_N reduction: 3% I_N per K up to max. 60°C (140°F))							[3]
Storage temperature[4]		–25°C…+85°C (–13°F…+185°F) (EN 60721-3-3, class 3K3)							
Maximum permissible oscillation and impact load		Meets EN 50178							
Enclosure (motor-dependent)		IP54, IP55, IP65, IP66 (options, specify when ordering) IP67 (only possible for inverter with terminal box)							
Operating mode		S1 (EN 60149-1-1 and 1-3), S3 max. cycle duration 10 minutes							
Type of cooling (DIN 41751)		Self-cooling							
Installation altitude		h ≤ 1000 m (P_N reduction: 1% per 100 m starting at 1000 m altitude, also see section 6.1)							
Required preventive measures		Ground the unit							

MOVIMOT® unit type		MM 03C-503-00	MM 05C-503-00	MM 07C-503-00	MM 11C-503-00	MM 15C-503-00	MM 22C-503-00	MM 30C-503-00	MM 3XC-503-00
Part Number		**824 115 5**	**824 116 3**	**824 117 1**	**824 118 X**	**824 119 8**	**824 120 1**	**824 121 X**	**824 180 5**
External electronics supply	TI. 24 V	V = +24 V ± 25%, EN 61131-2, residual ripple max. 13% $I_E \leq$ 250 mA (type 150 mA at 24 V) Input capacitance 100 µF							
Three binary inputs		Isolated using opto-coupler; PLC compatible (EN 61131-2) $R_i \approx$ 3,0 kW, $I_E \approx$ 10 mA, sampling interval £ 5 ms							
Signal level		+13 V…+30 V = "1" = Contact closed –3 V…+5 V = "0" = Contact open							
Control functions	TI. R TI. L TI.f1/f2	CW/stop CCW/stop "0" = setpoint 1/"1" = setpoint 2							
Output relay **Contact information**	TI. K1a TI. K1b	Response time ≤ 15 ms DC 24 V/DC 0.6 A/DC12 in accordance to 60947-5-1 (only SELV or PELV circuit)							
Signaling function		NO contact for ready signal	Contact closed: – With voltage present (24 V + mains) – In case no error was detected – At end of self-testing phase (when unit is turned on)						
Serial interface	TI. RS+ TI. RS-	RS-485							

1) Only possible at S3 25% cdf
2) 16 kHz PWM frequency (low-noise): When DIP SWITCH S1/7 = ON, the units operate with a 16 kHz PWM frequency (low noise) and switch back in steps to lower switching frequencies depending on the heat sink temperature.
3) –25°C…+40°C (–13°F…+104°F) with S3 25% cdf (up to max. 60°C (140°F) with S3 10% cdf)
4) If the unit is being stored for a long time, connect it to the mains voltage for at least 5 minutes every 2 years. Otherwise, the unit's service life may be reduced.

13.3 Technical data: options

MLU11A

MLU11A option	
Part number	0 823 383 7
Input voltage	380... AC 500 V ± 10% (50/60 Hz)
Output voltage	DC 24 V ± 25%
Output power	max. 6 W
Enclosure	IP65
Ambient temperature	–25…+60°C (–15°F…140°F)
Storage temperature	–25…+85°C (–15°F…+185°F)

MLU13A

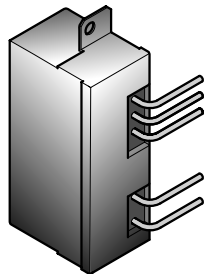

MLU13A option	
Part number	1 820 596 8
Input voltage	380... AC 500 V ± 10% (50/60 Hz)
Output voltage	DC 24 V ± 25%
Output power	Max. 8 W
Enclosure	IP20
Ambient temperature	–25…+85°C (–15…+185°F)
Storage temperature	–25…+85°C (–15…+185°F)

MLG11A

MLG11A option	
Part number	0 823 384 5
Input voltage	380... AC 500 V ± 10% (50/60 Hz)
Output voltage	DC 24 V ± 25%
Output power	Max. 6 W
Setpoint resolution	1%
Serial interface[1)]	RS-485 for connecting a MOVIMOT® inverter
Enclosure	IP65
Ambient temperature	–25…+60°C (–15…140°F)
Storage temperature	–25…+85°C (–15…+185°F)

1) With integrated dynamic terminating resistor

MBG11A

MBG11A option	
Part number	0 822 547 8
Input voltage	DC 24 V ± 25%
Current consumption	Approx. 70 mA
Setpoint resolution	1%
Serial interface[1)]	RS-485 for connecting max. 31 MOVIMOT® inverters (max. 200 m, 9600 baud)
Enclosure	IP65
Ambient temperature	–15…+60°C (–5…140°F)
Storage temperature	–25…+85°C (–15…+185°F)

1) With integrated dynamic terminating resistor

MWA21A

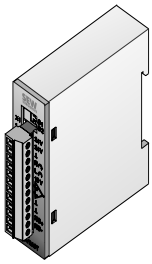

MWA21A option	
Part number	0 823 006 4
Input voltage	DC 24 V ± 25%
Current consumption	Approx. 70 mA
Serial interface[1)]	RS-485 for connecting max. 31 MOVIMOT® inverters (max. 200 m, 9600 baud) Unidirectional communication Cycle time: 100 ms
Analog input	0…10 V/2…10V, $R_i \approx 12$ W 0…20 mA/4…20 mA, $R_i \approx 22$ W
Setpoint resolution of the analog input	8 bits (± 1 bit)
Signal level binary inputs	+13 V – +30 V = "1" – 3 V …+5 V = "0"
Enclosure	IP20
Ambient temperature	–15…+60°C (–5…140°F)
Storage temperature	–25…+85°C (–15…+185°F)

1) With integrated dynamic terminating resistor

MDG11A

MDG11A option	
Part number	0 822 941 4
Input voltage	DC 24 V ± 25%
Current consumption	Approx. 70 mA
Serial interface	RS-485 for connecting **one** MOVIMOT® inverter with control using terminals
Enclosure	IP65
Ambient temperature	–15…+60°C (–5…140°F)
Storage temperature	–25…+85°C (–15…+185°F)

BGM brake rectifier

STOP	**STOP** With high supply voltage, the BGM brake rectifier or the braking resistor connected to it can be damaged. The brake coil must correspond to the supply voltage

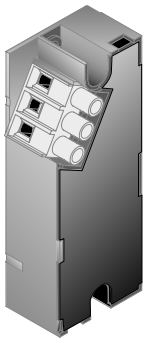

BGM brake rectifier	
Part number	0 827 602 1
Enclosure	IP20
Rated supply voltage (black connecting wires)	AC 230 V…AC 500 V, +10%/-15% 50 Hz…60 Hz, ± 5%
Control voltage (red/blue connecting wires)	+13 V…+30 V = "1" –3 V…+5 V = "0"
Brake current (brake connection 13, 14, 15)	max. DC 0.8 A
Ambient temperature	–25…+60°C (–15…140°F)
Storage temperature	–25…+85°C (–15…+185°F)

URM voltage relay

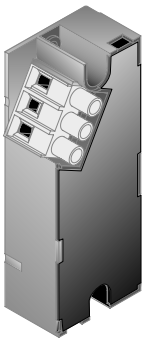

URM voltage relay	
Part number	0 827 601 3
Function	Implements rapid application of the mechanical brake
Enclosure	IP20
Rated voltage V_N	DC 36 V…DC 167 V (Brake coil AC 88 V…AC 167 V)
Brake current I_N	0.75 A
Ambient temperature	–25…+60°C (–15…140°F)
Storage temperature	–25…+85°C (–15…+185°F)
Switch off time t_{off} (separation in the DC circuit)	approx. 40 ms

MNF11A

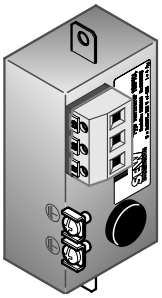

MNF11A option	
Part number	0 828 316 8
Function	3 phase line filter
Enclosure	IP00
Input voltage	3 x 380 V ±10%/50…60 Hz
Input current	4 A
Ambient temperature	–25…+60°C (–15…140°F)
Storage temperature	–25…+85°C (–15…+185°F)

13.4 Working air gap, braking torque, brake

Brake	Motor	Working air gap mm		Braking torque settings				
		Min.[1]	Max.	Braking torque [Nm]	Type and no. of springs		Order numbers of springs	
					Normal	Red	Normal	Red
BMG05	**DT 71**	0.25	0.6	5.0 4.0 2.5 1.6 1.2	3 2 – – –	– 2 6 4 3	135 017 X	135 018 8
BMG1	**DT 80**			10 7.5 6.0 5.0 4.0 2.5	6 4 3 3 2 –	– 2 3 – 2 6		
BMG2	**DT 90**			20 16 10 6.6 5.0	3 2 – – –	– 2 6 4 3	135 150 8	135 151 6
BMG4	**DV 100**			40 30 24 20 16	6 4 3 3 2	– 2 3 – 2		

1) Please note when checking the working air gap that parallelism tolerances on the brake disc may give rise to deviations of ± 0.15 mm after a test run.

13.5 Permissible ball bearing types

Motor type	Drive-end bearing (foot, flanged or gearmotors)			Non drive-end bearing (AC motor, brake motor)	
	Flange-mounted motor	Gearmotor	Foot-mounted motor	AC motor	Brake motor
DT 71-80	6204-Z-J	6303-Z-J	6204-Z-J	6203-J	6203-RS-J-C3
DT 90-DV100	6306-Z-J-C3			6205-J	6205-RS-J-C3

13.6 Integrated RS-485 interface

RS-485 interface	
Standard	RS-485 to EIA standard (with integrated dynamic terminating resistor)
Baud rate	9.6 kBaud 31.25 kBaud (in connection with MF.. fieldbus interfaces)
Start bits	1 start bit
Stop bits	1 stop bit
Data bits	8 data bits
Parity	1 parity bit, completing for even parity (even parity)
Data direction	Unidirectional
Operating mode	Asynchronous, semi-duplex
Timeout interval	1 s
Cable length	Max. 200 m in RS-485 operation with 9600 Baud Max. 30 m at transmission rate: 31,250 baud [1)]
Number of participants	• Max. 32 participants (1 bus master + 31 MOVIMOT® units) broadcast and group addresses possible[2)] • 15 MOVIMOT® can be addressed individually.

1) Transmission rate of 31.250 Baud will be detected automatically in case of operation with MF.. fieldbus interface.

2) External control or MBG11A, MWA21A or MLG..A option

13.7 Assignment of internal braking resistors

MOVIMOT® Type	Braking resistor	Part number
MM03 to MM15	BW1	0 822 897 3[1)]
MM22 to MMM3X	BW2	0 823 136 2[1)]

1) 2 screws M4 x 8, included in delivery

13.8 Assignment of external braking resistors

MOVIMOT® unit type	Braking resistor	Part number	Protective grid
MM03 to MM15	BW200-003/K-1.5	0 828 291 9	0 813 152 X
	BW200-005/K-1.5	0 828 283 8	–
	BW150-010	0 802 285 2	–
MM22 to MMM3X	BW100-003/K-1.5	0 828 293 5	0 813 152 X
	BW100-005/K-1.5	0 828 286 2	–
	BW068-010	0 802 287 9	–
	BW068-020	0 802 286 0	–

BW100...
BW200...

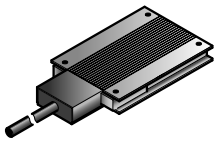

	BW100-003/ K-1.5	BW100-005/ K-1.5	BW200-003/ K-1.5	BW200-005/ K-1.5
Part number	0 828 293 5	0 828 286 2	0 828 291 9	0 828 283 8
Function	Diverting the regenerative energy			
Enclosure	IP65			
Resistance	100 Ω	100 Ω	200 Ω	200 Ω
Power at S1, 100% cdf	100 W	200 W	100 W	200 W
Dimensions W x H x D	146 x 15 x 80 mm	152 x 15 x 80 mm	146 x 15 x 80 mm	152 x 15 x 80 mm
Cable length	1.5 m			

BW150...
BW068...

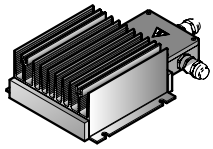

	BW150-010	BW068-010	BW068-020
Part number	0 802 285 2	0 802 287 9	0 802 286 0
Function	Diverting the regenerative energy		
Enclosure	IP66		
Resistance	150 Ω	68 Ω	68 Ω
Power according to UL at S1, 100% cdf	600 W	600 W	1200 W
Power according to CE at S1, 100% cdf	900 W	900 W	1800 W
Dimensions W x H x D	260 x 75 x 174 mm	260 x 75 x 174 mm	610 x 75 x 174 mm

13.9 Resistance and assignment of the brake coil

Motor	Brake	Resistance of the brake coil[1)]
DT71	**BMG05**	277 Ω (230 V)
DT80	**BMG1**	248 Ω (230 V)
DT90	**BMG2**	216 Ω (230 V)/54.2 W (110 V)
DV100/DT100	**BMG4**	43.5 Ω (110 V)

1) Rated value measured between the red connection (terminal 13) and the blue connection (terminal 15) at 20°C (68°F), temperature-dependent fluctuations in the range –25%/+40% are possible.

14 Technical Data: MOVIMOT® with Integrated AS-Interface

14.1 Motor with operating point 400 V/50 Hz or 400 V/100 Hz

MOVIMOT® unit type		**MM 03C-503-30**	**MM 05C-503-30**	**MM 07C-503-30**	**MM 11C-503-30**	**MM 15C-503-30**	**MM 22C-503-30**	**MM 30C-503-30**	**MM 3XC-503-30**
Part number		**824 355 7**	**824 356 5**	**824 357 3**	**824 358 1**	**824 359 X**	**824 360 3**	**824 361 1**	**824 362 X**
Apparent output power at V_{mains} = AC 380...500 V	S_N	1.1 kVA	1.4 kVA	1.8 kVA	2.2 kVA	2.8 kVA	3.8 kVA	5.1 kVA	6.7 kVA
Supply voltages Permitted range	V_{mains}	3 x AC 380 V/**AC 400 V**/AC 415 V/AC 460 V/AC 500 V V_{mains} = AC 380 V –10% … AC 500 V +10%							
Supply frequency	f_{mains}	50 Hz … 60 Hz ± 10%							
Rated mains current (with V_{mains} = AC 400 V)	I_{mains}	1.3 A_{AC}	1.6 A_{AC}	1.9 A_{AC}	2.4 A_{AC}	3.5 A_{AC}	5.0 A_{AC}	6.7 A_{AC}	8.6 A_{AC}
Output voltage	V_A	0...V_{mains}							
Output frequency Resolution Operating point	f_A	2…100 Hz 0.01 Hz 400 V at 50 Hz/100 Hz							
Rated output current	I_N	1.6 A_{AC}	2.0 A_{AC}	2.5 A_{AC}	3.2 A_{AC}	4.0 A_{AC}	5.5 A_{AC}	7.3 A_{AC}	9.6 A_{AC}
Motor power S1	P_{Mot}	**0.37 kW**	**0.55 kW**	**0.75 kW**	**1.1 kW**	**1.5 kW**	**2.2 kW**	**3.0 kW**	**3.0 kW**
Motor power S3 25% cdf									**4.0 kW**
PWM frequency		**4 (factory setting)**/8/16[1] kHz							
Current limitation	I_{max}	**Motor:** 160% with W and m **Regenerative:** 160% with W and m							
Maximum motor cable length		15 m when the MOVIMOT® frequency inverter (with SEW hybrid cable and option P2.A) is mounted close to the motor							
External braking resistor	R_{min}	150 W					68 W		
Interference immunity		Conforms to EN 61800–3							
Interference emission		Conforms to EN 61800–3 and limit value class A to EN 55011 and EN 55014							
Ambient temperature	ϑ_U	**–25°C…+40°C** (**–13°F…+104°F**) (P_N reduction: 3% I_N per K up to max. 60°C (140°F)) [2]							
Storage temperature[3]		–25°C…+85°C (–15°F…185°F) (EN 60721-3-3, class 3K3)							
Maximum permissible oscillation and impact load		Meets EN 50178							
Enclosure (motor-dependent)		IP54, IP55, IP65, IP66 (options, specify when ordering) IP67 (only possible for inverter with terminal box)							
Operating mode		S1 (EN 60149-1-1 and 1-3), S3 max. cycle duration 10 minutes							
Type of cooling (DIN 41751)		Self-cooling							
Installation altitude		h ≤ 1000 m (P_N reduction: 1% per 100 m starting at 1000 m altitude, also see section 7.1)							
Required preventive measures		Ground the unit							

MOVIMOT® unit type		MM 03C-503-30	MM 05C-503-30	MM 07C-503-30	MM 11C-503-30	MM 15C-503-30	MM 22C-503-30	MM 30C-503-30	MM 3XC-503-30
Part number		**824 355 7**	**824 356 5**	**824 357 3**	**824 358 1**	**824 359 X**	**824 360 3**	**824 361 1**	**824 362 X**
Power supply to control electronics		**AS-interface:** 29.5 V 31.6 V (AS-interface power supply in accordance to EN 50295) **Optional AUX-PWR** 24 V ± 25%, EN 61131-2, residual ripple max. 13%, input capacity 100 µF A PELV power supply (protective extra low voltage) in accordance to IEC 60364-4-41 with safe disconnection is recommended for the auxiliary voltage supply AUX-PWR. **I_E only AS-interface:** £ 200 mA[4)] (Type 120 mA at 30 V) **I_E AS-interface + AUX-PWR:** £ 50 mA (type 30 mA at 30 V) + mA[4)] (typ. 120 mA at 24 V)							
Control input	AS + AS –	Connection of the AS-interface data line Connection of the AS-interface data line							
Sensor connection (Maximum sensor line length 15 m)	TI. DI2 TI. DI3 TI. 0V TI. 0VØ	External sensor input External sensor input 24 V for sensor supply Reference potential for sensor supply							
Diagnostics interface		RJ10							

1) 16 kHz PWM frequency (low-noise): When DIP SWITCH S3/3 = ON, the units operate with a 16 kHz PWM frequency (low noise) and switch back in steps to lower switching frequencies depending on the heat sink temperature.
2) –25°C…+40°C (–13°F…+104°F) with S3 25% cdf (up to max. 60°C (140°F) with S3 10% cdf)
3) If the unit is being stored for a long time, connect it to the mains voltage for at least 5 minutes every 2 years. Otherwise, the service life of the unit may be reduced.
4) The current increases according to the demands of the connected sensors (max. 100mA).

14.2 Technical data: options

URM voltage relay

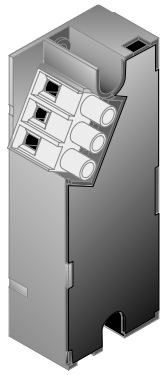

URM voltage relay	
Part number	0 827 601 3
Function	Implements rapid application of the mechanical brake.
Enclosure	IP20
Rated voltage V_N	DC 36 V…DC 167 V (Brake coil AC 88 V…AC 167 V)
Brake current I_N	0.75 A
Ambient temperature	–25…+60°C (–15…140°F)
Storage temperature	–25…+85°C (–15…+185°F)
Switch off time t_{off} (separation in the DC circuit)	Approx. 40 ms

MNF11A

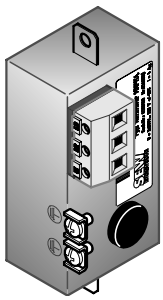

MNF11A option	
Part number	0 828 316 8
Function	3 phase line filter
Enclosure	IP00
Input voltage	3 x 380 V ±10%/50…60 Hz
Input current	4 A
Ambient temperature	–25…+60°C (–15…140°F)
Storage temperature	–25…+85°C (–15…+185°F)

14.3 Working air gap, braking torque, brake

Brake	Motor	Working air gap mm		Braking torque settings				
		Min.[1]	Max.	Braking torque [Nm]	Type and no. of springs		Order numbers of springs	
					Normal	Red	Normal	Red
BMG05	**DT 71**	0.25	0.6	5.0 4.0 2.5 1.6 1.2	3 2 – – –	– 2 6 4 3	135 017 X	135 018 8
BMG1	**DT 80**			10 7.5 6.0 5.0 4.0 2.5	6 4 3 3 2 –	– 2 3 – 2 6		
BMG2	**DT 90**			20 16 10 6.6 5.0	3 2 – – –	– 2 6 4 3	135 150 8	135 151 6
BMG4	**DV 100**			40 30 24 20 16	6 4 3 3 2	– 2 3 – 2		

1) When checking the working air gap, note: Parallelism tolerances on the brake disk may give rise to deviations of ±0.15 mm after a test run.

14.4 Permissible ball bearing types

Motor type	Drive-end bearing (foot, flanged, or gearmotors)			Non drive-end bearing (AC motor, brake motor)	
	Flange-mounted motor	Gearmotor	Foot-mounted motor	AC motor	Brake motor
DT 71-80	6204-Z-J	6303-Z-J	6204-Z-J	6203-J	6203-RS-J-C3
DT 90-DV100	6306-Z-J-C3			6205-J	6205-RS-J-C3

14.5 Assignment of internal braking resistors

MOVIMOT® unit type	Braking resistor	Part number
MM03 to MM15	BW1	0 822 897 3[1]
MM22 to MMM3X	BW2	0 823 136 2[1]

1) 2 screws M4 x 8, included in delivery

14.6 Assignment of external braking resistors

MOVIMOT® unit type	Braking resistor	Part number	Protective grid
MM03 to MM15	BW200-003/K-1.5	0 828 291 9	0 813 152 X
	BW200-005/K-1.5	0 828 283 8	–
	BW150-010	0 802 285 2	–
MM22 to MMM3X	BW100-003/K-1.5	0 828 293 5	0 813 152 X
	BW100-005/K-1.5	0 828 286 2	–
	BW068-010	0 802 287 9	–
	BW068-020	0 802 286 0	–

BW100...
BW200...

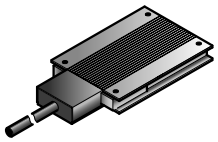

	BW100-003/ K-1.5	BW100-005/ K-1.5	BW200-003/ K-1.5	BW200-005/ K-1.5
Part number	0 828 293 5	0 828 286 2	0 828 291 9	0 828 283 8
Function	Diverting the regenerative energy			
Enclosure	IP65			
Resistance	100 W	100 W	200 W	200 W
Power at S1, 100% cdf	100 W	200 W	100 W	200 W
Dimensions W x H x D	146 x 15 x 80 mm	152 x 15 x 80 mm	146 x 15 x 80 mm	152 x 15 x 80 mm
Cable length	1.5 m			

BW150...
BW068...

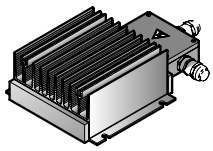

	BW150-010	BW068-010	BW068-020
Part number	0 802 285 2	0 802 287 9	0 802 286 0
Function	Diverting the regenerative energy		
Enclosure	IP66		
Resistance	150 W	68 W	68 W
Power according to UL at S1, 100% cdf	600 W	600 W	1200 W
Power according to CE at S1, 100% cdf	900 W	900 W	1800 W
Dimensions W x H x D	260 x 75 x 174 mm	260 x 75 x 174 mm	610 x 75 x 174 mm

14.7 Resistance and assignment of the brake coil

Motor	Brake	Resistance of the brake coil[1)]
DT71	**BMG05**	277 W (230 V)
DT80	**BMG1**	248 W (230 V)
DT90	**BMG2**	216 W (230 V)/54.2 W (110 V)
DV100/DT100	**BMG4**	43.5 W (110 V)

1) Rated value measured between the red connection (terminal 13) and the blue connection (terminal 15) at 20°C (68°F), temperature-dependent fluctuations in the range –25%/+40% are possible.

15 Index

0...9

24 V supply
- *MOVIMOT® standard version* 33
- *MOVIMOT® with AS-interface* 130

A

Additional functions
- *MOVIMOT® standard version* 74, 75
- *MOVIMOT® with AS-interface* 117, 118

Address range 145

Adjustable current limitation 119
- *MOVIMOT® standard version* 76, 77
- *MOVIMOT® with AS-interface* 120

AMA6 36

Analog input 106

Analog signal 153

AS-interface address
- *MLK11A* 109
- *MOVIMOT® with AS-interface* 128

AS-interface binary slave 107

ASA3 36

AVT1 36

B

Ball bearing types 196, 201

BGM 97
- *Connection* 41
- *Retrofit* 99
- *Technical data* 195

BGM brake control 97

Binary control 33, 100

Block check character BCC 146

BMG brake rectifier 195

Brake
- *Braking torque* 196, 201
- *Changing the braking torque* 186
- *Inspection* 182
- *Replacing brake disk* 184
- *Working air gap* 196, 201

Brake coil 198, 202

Braking resistors
- *External* 198, 202
- *Internal* 197, 201

Braking torque 196, 201

C

Cable cross-section
- *MOVIMOT® standard version* 31
- *MOVIMOT® with AS-interface* 49

Cable glands 21

Changing the braking torque 186

Coding process data items 141

Communication interface 139

Conductor end sleeves
- *MOVIMOT® standard version* 31
- *MOVIMOT® with AS-interface* 49

Connection
- *AYUD adapter* 60
- *BGM* 41
- *DBG60B* 59
- *MBG11A* 39
- *MDG11A* 43
- *MLG11A* 38
- *MLK11A* 39
- *MLU11A* 37
- *MLU13A* 37
- *MNF11A* 42, 58
- *Motor* 45, 63
- *Motor, overview* 47, 65
- *MOVIMOT® standard version* 35
- *MOVIMOT® with AS-interface* 52
  - MOVIMOT® MM../AND3/AZSK 57
  - MOVIMOT® MM../AVSK 55
  - MOVIMOT® MM../AZSK 56
- *MWA21A* 40
- *PC* 62
- *PE* 32, 50
- *RS-485 bus master* 44
- *Safety notes* 9
- *URM* 41, 58

Control elements
- *MOVIMOT® standard version* 68
- *MOVIMOT® with AS-interface* 113

Control process
- *MOVIMOT® standard version* 74
- *MOVIMOT® with AS-interface* 117

D

Damp locations 21

DBG60B
- *Connection* 59
- *Description* 158
- *Dimension drawing* 159
- *Keys* 160

Language selection 161
Manual operation mode 162
Monitor mode 151
Scaling factors 164
DBG60B keypad 158
Design of the safety notes 6
Designated use 7
Diagnostic interface 62
Diagnostic unit 43
Diagnostics
MOVIMOT® standard version
with MDG11A option 170
with status LED 167
MOVIMOT® with AS-interface
with MOVITOOLS® 174
with status LED 172
DIP switch
S1 and S2 (MOVIMOT® standard) 69
S3 and S4 (MOVIMOT® with AS-interface) 114
Documents, additional 8

E

Earth-leakage circuit breaker
MOVIMOT® standard version 31
MOVIMOT® with integrated AS-interface 49
EMC-compliant installation 33, 51
Enabling the direction of rotation 35, 110, 131, 140, 155
Exclusion of liability 6
Extended storage 189

F

Fault display
MOVIMOT® standard version 167
MOVIMOT® with AS-interface 172
Fault list
MOVIMOT® standard version 168
MOVIMOT® with AS-interface 173
Fieldbus 139
Floating clearance 184
Function with RS-485 master 144
Further applicable documents 8

G

Group address 145

H

Hand-held programming device 128
Hoist applications 8, 86
Hybrid cable
for MOVIMOT® standard version 47
for MOVIMOT® with AS-Interface 65

I

Idle period 145
Inputs
MLK11A 108
MOVIMOT® with AS-interface 131
Inspecting the brake 183
Inspection
Brake 182
Motor 180
Inspection intervals 179
Installation 8
in damp locations 21
Mains contactor 31
Mechanical 20
Notes 20
Turning the terminal box 22
Installation altitudes
MOVIMOT® standard version 33
MOVIMOT® with AS-interface 51
Installation instructions
MOVIMOT® standard version 31
MOVIMOT® with AS-interface 49
Installation tolerances 20
Integrator ramp
MOVIMOT® standard version 68
MOVIMOT® with AS-interface 113
Interface adapter 62

J

Jog mode 67, 112

L

LEDs
MOVIMOT® standard version 149
MOVIMOT® with AS-interface 150, 172
Line fusing
MOVIMOT® standard version 31
MOVIMOT® with AS-interface 49
Low-noise operation 115, 122
Lower motor power increment
MOVIMOT® with AS-interface 115
Lower motor power rating
MOVIMOT® standard version 71
Lubricate backstop 181

M
Mains contactor 31, 49
Maintenance intervals 179
Manual mode
with DBG60B 162
with MOVITOOLS® 154
Maximum frequency 68
MBG11A
Connection 39
Mounting 26
Operation 152
Startup 102
Technical data 194
MDG11A
Connection 43
Technical data 195
Mechanical installation 20
Message processing 147
Message structure 144
Minimum frequency 68
Minimum frequency 0 Hz
MOVIMOT® standard version 85
MOVIMOT® with AS-interface 123
MLG11A
Connection 38
Mounting 25
Operation 152
Startup 102
Technical data 194
MLK11A
AS-interface address 109
Connection 39
Inputs 108
LEDs 109
Mounting 25
Outputs 108
Startup 107
MLU11A
Connection 37
Mounting 25
Technical data 193
MLU13A
Connection 37
Technical data 193
MNF11A
Connection 42, 58
Mounting 28
Technical data 196, 200
MNF11A line filter 196, 200
Modular terminal box 22
Motor
Connection 45, 63
Connection type 110
Enabling the direction of rotation 110
Inspection 181
Motor protection 110
Motor protection 110
MOVIMOT® standard version 70
MOVIMOT® with AS-interface 115
Motor protection via TH 81
Motor terminal assignment 48, 66
Motor type
MOVIMOT® standard version 72
MOVIMOT® with AS-interface 116
Mounting
close to motor 24
MBG11A 26
MLG11A 25
MLK11A 25
MLU11A 25
MNF11A 28
MWA21A 27
URM 27
Mounting close to the motor
Connection of MOVIMOT® and motor
MOVIMOT® standard version 45
MOVIMOT® with AS-interface 63
Mounting dimensions 24
Startup instructions
MOVIMOT® standard version 110
MOVIMOT® with AS-interface 137
Unit designation 15, 19
MOVILINK® unit profile 141
MOVITOOLS® 80
Diagnostics 177
Display 178
Manual mode, activation 155
Manual mode, control 155
Manual mode, description 154
Manual mode, display 156
Manual mode, reset 157
Manual mode, timeout interval 157
Scaling factors 135
Start 132, 175
MWA21A
Connection 40
Mounting 27
Operation 153
Startup 104
Technical data 194

N
Nameplate
Inverter
MOVIMOT® standard version 14
MOVIMOT® with AS-interface 18
Motor
MOVIMOT® standard version 13
MOVIMOT® with AS-interface 17
Mounting close to the motor
MOVIMOT® standard version 15
MOVIMOT® with AS-interface 19
No-load damping function
MOVIMOT® standard version 71
MOVIMOT® with AS-interface 115

O
Operating display
MOVIMOT® standard version 149
MOVIMOT® with integrated AS-interface ...150
with DBG60B option 151
Operation
Low-noise 115, 122
Safety notes 9
with binary control 101
with control via terminals 101
with DBG60B 162
with MBG11A 152
with MLG11A 152
with MOVITOOLS® 154
with MWA21A, speed control module 153
Outputs
MLK11A 108
MOVIMOT® with AS-interface 131

P
Paint protection cap 67, 112
Paint protection film 67, 112
PE connection 32, 50
Phase failure monitoring, deactivation
MOVIMOT® standard version 90
MOVIMOT® with AS-interface 125
Plug connector 36
Process data items
Process input data 143
Process output data 142
Protection devices
MOVIMOT® standard version 34
MOVIMOT® with AS-interface 51
PWM frequency
MOVIMOT® standard version 71, 82
MOVIMOT® with AS-interface 115, 122

R
Ramp times
MOVIMOT® standard version 68
MOVIMOT® with AS-interface 113
Ramp times, increased
MOVIMOT® standard version 76
MOVIMOT® with AS-interface 119
Rapid start/stop
MOVIMOT® standard version 83
MOVIMOT® with AS-interface 122
Rapid start/stop and motor protection via TH 90
Rated voltage
MOVIMOT® standard version 31
MOVIMOT® with AS-interface 49
Relay output 97
Releasing the brake without enable
MOVIMOT® standard version 72
MOVIMOT® with AS-interface 116
Replacing brake disk 184
Request message 148
Response message 148
Revision status 10
Right to claim under warranty 6
RS-485
Address range 145
Connection of RS-485 bus master 44
Function with RS-485 master 144
Group address 145
RS-485 address 70
RS-485 interface 33
Technical data of interface 197
User data type 145

S
Safe disconnection 9
Safety functions 8
Safety notes 7
Design 6
Electrical connection 9
General 7
Installation 8
Operation 9
Storage 8
Transportation 8
Scaling factors 135
Service 167, 188
Setpoint f1
MOVIMOT® standard version 68
MOVIMOT® with AS-interface 113

Setpoint f2
MOVIMOT® standard version 68
MOVIMOT® with AS-interface 113
Setpoint potentiometer f1
MOVIMOT® standard version 68
MOVIMOT® with AS-interface 113
Setpoint scaling using parameter bits 131
Setpoint stop function 153
Setpoint switch f2
MOVIMOT® standard version 68
MOVIMOT® with AS-interface 113
Setting bus parameters 79
SEW service 188
Slip compensation, deactivated 97
Slip compensation, expanded
MOVIMOT® with AS-interface 125
Speed control module 104
Speed monitoring
MOVIMOT® standard version 74
MOVIMOT® with AS-interface 117
Speed monitoring, extended 94
Start delimiter 145
Startup
MOVIMOT® standard version 67
MOVIMOT® with AS-interface 112, 126
MOVIMOT® with fieldbus interface 139
MOVIMOT® with MLK11A 107
Notes for installation close to the motor 137
with MBG11A 102
with MLG11A 102
with MOVITOOLS® 132
with MWA21A 104
with P2.A 110
Storage 8
Supply system leads
MOVIMOT® standard version 31
MOVIMOT® with AS-interface 49
Switch S5
MOVIMOT® with AS-interface 130
Switch t1
MOVIMOT® standard version 68
MOVIMOT® with AS-interface 113

T
Target group 7
Technical data
MOVIMOT® standard version
400 V/50 Hz or 400 V/100 Hz 190
460V/60Hz 192
MOVIMOT® with AS-interface 199
Options 193, 200
Terminal control 100
Tightening torque
for MOVIMOT® terminals 30
Tightening torques 29
Timeout monitoring 145
Torque, reduced
MOVIMOT® standard version 89
MOVIMOT® with AS-interface 124
Transportation 8
Turning the terminal box 22

U
UL-compliant installation
MOVIMOT® standard version 34
MOVIMOT® with AS-interface 51
Unit design
MOVIMOT® standard version 12
MOVIMOT® with AS-interface 16
Unit designation
Inverter
MOVIMOT® standard version 14
MOVIMOT® with AS-interface 18
Motor
MOVIMOT® standard version 13
MOVIMOT® with AS-interface 17
Mounting close to the motor
MOVIMOT® standard version 15
MOVIMOT® with AS-interface 19
Unit identification 14, 18
URM
Connection
MOVIMOT® standard version 41
MOVIMOT® with AS-interface 58
Mounting 27
Technical data 195, 200
URM voltage relay 195, 200

W
Waste disposal 189
Working air gap 183, 196, 201

Address List

Germany			
Headquarters **Production** **Sales**	**Bruchsal**	SEW-EURODRIVE GmbH & Co KG Ernst-Blickle-Straße 42 D-76646 Bruchsal P.O. Box Postfach 3023 • D-76642 Bruchsal	Tel. +49 7251 75-0 Fax +49 7251 75-1970 http://www.sew-eurodrive.de sew@sew-eurodrive.de
Service **Competence Center**	**Central** Gear units / Motors	SEW-EURODRIVE GmbH & Co KG Ernst-Blickle-Straße 1 D-76676 Graben-Neudorf	Tel. +49 7251 75-1710 Fax +49 7251 75-1711 sc-mitte-gm@sew-eurodrive.de
	Central Electronics	SEW-EURODRIVE GmbH & Co KG Ernst-Blickle-Straße 42 D-76646 Bruchsal	Tel. +49 7251 75-1780 Fax +49 7251 75-1769 sc-mitte-e@sew-eurodrive.de
	North	SEW-EURODRIVE GmbH & Co KG Alte Ricklinger Straße 40-42 D-30823 Garbsen (near Hannover)	Tel. +49 5137 8798-30 Fax +49 5137 8798-55 sc-nord@sew-eurodrive.de
	East	SEW-EURODRIVE GmbH & Co KG Dänkritzer Weg 1 D-08393 Meerane (near Zwickau)	Tel. +49 3764 7606-0 Fax +49 3764 7606-30 sc-ost@sew-eurodrive.de
	South	SEW-EURODRIVE GmbH & Co KG Domagkstraße 5 D-85551 Kirchheim (near München)	Tel. +49 89 909552-10 Fax +49 89 909552-50 sc-sued@sew-eurodrive.de
	West	SEW-EURODRIVE GmbH & Co KG Siemensstraße 1 D-40764 Langenfeld (near Düsseldorf)	Tel. +49 2173 8507-30 Fax +49 2173 8507-55 sc-west@sew-eurodrive.de
	Drive Service Hotline / 24 Hour Service		+49 180 5 SEWHELP +49 180 5 7394357
	Additional addresses for service in Germany provided on request!		

France			
Production **Sales** **Service**	**Haguenau**	SEW-USOCOME 48-54, route de Soufflenheim B. P. 20185 F-67506 Haguenau Cedex	Tel. +33 3 88 73 67 00 Fax +33 3 88 73 66 00 http://www.usocome.com sew@usocome.com
Assembly **Sales** **Service**	**Bordeaux**	SEW-USOCOME Parc d'activités de Magellan 62, avenue de Magellan - B. P. 182 F-33607 Pessac Cedex	Tel. +33 5 57 26 39 00 Fax +33 5 57 26 39 09
	Lyon	SEW-USOCOME Parc d'Affaires Roosevelt Rue Jacques Tati F-69120 Vaulx en Velin	Tel. +33 4 72 15 37 00 Fax +33 4 72 15 37 15
	Paris	SEW-USOCOME Zone industrielle 2, rue Denis Papin F-77390 Verneuil l'Etang	Tel. +33 1 64 42 40 80 Fax +33 1 64 42 40 88
	Additional addresses for service in France provided on request!		

Algeria			
Sales	**Alger**	Réducom 16, rue des Frères Zaghnoun Bellevue El-Harrach 16200 Alger	Tel. +213 21 8222-84 Fax +213 21 8222-84

Argentina			
Assembly **Sales** **Service**	**Buenos Aires**	SEW EURODRIVE ARGENTINA S.A. Centro Industrial Garin, Lote 35 Ruta Panamericana Km 37,5 1619 Garin	Tel. +54 3327 4572-84 Fax +54 3327 4572-21 sewar@sew-eurodrive.com.ar

Australia			
Assembly **Sales** **Service**	**Melbourne**	SEW-EURODRIVE PTY. LTD. 27 Beverage Drive Tullamarine, Victoria 3043	Tel. +61 3 9933-1000 Fax +61 3 9933-1003 http://www.sew-eurodrive.com.au enquires@sew-eurodrive.com.au
	Sydney	SEW-EURODRIVE PTY. LTD. 9, Sleigh Place, Wetherill Park New South Wales, 2164	Tel. +61 2 9725-9900 Fax +61 2 9725-9905 enquires@sew-eurodrive.com.au
	Townsville	SEW-EURODRIVE PTY. LTD. 12 Leyland Street Garbutt, QLD 4814	Tel. +61 7 4779 4333 Fax +61 7 4779 5333 enquires@sew-eurodrive.com.au

Austria			
Assembly **Sales** **Service**	**Wien**	SEW-EURODRIVE Ges.m.b.H. Richard-Strauss-Strasse 24 A-1230 Wien	Tel. +43 1 617 55 00-0 Fax +43 1 617 55 00-30 http://sew-eurodrive.at sew@sew-eurodrive.at

Belgium			
Assembly **Sales** **Service**	**Brüssel**	SEW Caron-Vector S.A. Avenue Eiffel 5 B-1300 Wavre	Tel. +32 10 231-311 Fax +32 10 231-336 http://www.caron-vector.be info@caron-vector.be

Brazil			
Production **Sales** **Service**	**Sao Paulo**	SEW-EURODRIVE Brasil Ltda. Avenida Amâncio Gaiolli, 50 Caixa Postal: 201-07111-970 Guarulhos/SP - Cep.: 07251-250	Tel. +55 11 6489-9133 Fax +55 11 6480-3328 http://www.sew.com.br sew@sew.com.br
	Additional addresses for service in Brazil provided on request!		

Bulgaria			
Sales	**Sofia**	BEVER-DRIVE GmbH Bogdanovetz Str.1 BG-1606 Sofia	Tel. +359 2 9151160 Fax +359 2 9151166 bever@fastbg.net

Cameroon			
Sales	**Douala**	Electro-Services Rue Drouot Akwa B.P. 2024 Douala	Tel. +237 4322-99 Fax +237 4277-03

Canada			
Assembly **Sales** **Service**	**Toronto**	SEW-EURODRIVE CO. OF CANADA LTD. 210 Walker Drive Bramalea, Ontario L6T3W1	Tel. +1 905 791-1553 Fax +1 905 791-2999 http://www.sew-eurodrive.ca l.reynolds@sew-eurodrive.ca
	Vancouver	SEW-EURODRIVE CO. OF CANADA LTD. 7188 Honeyman Street Delta. B.C. V4G 1 E2	Tel. +1 604 946-5535 Fax +1 604 946-2513 b.wake@sew-eurodrive.ca
	Montreal	SEW-EURODRIVE CO. OF CANADA LTD. 2555 Rue Leger Street LaSalle, Quebec H8N 2V9	Tel. +1 514 367-1124 Fax +1 514 367-3677 a.peluso@sew-eurodrive.ca
	Additional addresses for service in Canada provided on request!		

Chile			
Assembly **Sales** **Service**	**Santiago de Chile**	SEW-EURODRIVE CHILE LTDA. Las Encinas 1295 Parque Industrial Valle Grande LAMPA RCH-Santiago de Chile P.O. Box Casilla 23 Correo Quilicura - Santiago - Chile	Tel. +56 2 75770-00 Fax +56 2 75770-01 www.sew-eurodrive.cl ventas@sew-eurodrive.cl

China			
Production **Assembly** **Sales** **Service**	**Tianjin**	SEW-EURODRIVE (Tianjin) Co., Ltd. No. 46, 7th Avenue, TEDA Tianjin 300457	Tel. +86 22 25322612 Fax +86 22 25322611 gm-tianjin@sew-eurodrive.cn http://www.sew-eurodrive.com.cn
Assembly **Sales** **Service**	**Suzhou**	SEW-EURODRIVE (Suzhou) Co., Ltd. 333, Suhong Middle Road Suzhou Industrial Park Jiangsu Province, 215021 P. R. China	Tel. +86 512 62581781 Fax +86 512 62581783 suzhou@sew.com.cn
	Additional addresses for service in China provided on request!		

Colombia			
Assembly **Sales** **Service**	**Bogotá**	SEW-EURODRIVE COLOMBIA LTDA. Calle 22 No. 132-60 Bodega 6, Manzana B Santafé de Bogotá	Tel. +57 1 54750-50 Fax +57 1 54750-44 http://www.sew-eurodrive.com.co sewcol@sew-eurodrive.com.co

Croatia			
Sales **Service**	**Zagreb**	KOMPEKS d. o. o. PIT Erdödy 4 II HR 10 000 Zagreb	Tel. +385 1 4613-158 Fax +385 1 4613-158 kompeks@net.hr

Czech Republic			
Sales	**Praha**	SEW-EURODRIVE CZ S.R.O. Business Centrum Praha Lužná 591 CZ-16000 Praha 6 - Vokovice	Tel. +420 220121234 Fax +420 220121237 http://www.sew-eurodrive.cz sew@sew-eurodrive.cz

Denmark			
Assembly **Sales** **Service**	**Kopenhagen**	SEW-EURODRIVEA/S Geminivej 28-30, P.O. Box 100 DK-2670 Greve	Tel. +45 43 9585-00 Fax +45 43 9585-09 http://www.sew-eurodrive.dk sew@sew-eurodrive.dk

Estonia			
Sales	**Tallin**	ALAS-KUUL AS Mustamäe tee 24 EE-10620 Tallin	Tel. +372 6593230 Fax +372 6593231 veiko.soots@alas-kuul.ee

Finland			
Assembly **Sales** **Service**	**Lahti**	SEW-EURODRIVE OY Vesimäentie 4 FIN-15860 Hollola 2	Tel. +358 201 589-300 Fax +358 3 780-6211 sew@sew.fi http://www.sew-eurodrive.fi

Gabon			
Sales	**Libreville**	Electro-Services B.P. 1889 Libreville	Tel. +241 7340-11 Fax +241 7340-12

Great Britain			
Assembly **Sales** **Service**	**Normanton**	SEW-EURODRIVE Ltd. Beckbridge Industrial Estate P.O. Box No.1 GB-Normanton, West- Yorkshire WF6 1QR	Tel. +44 1924 893-855 Fax +44 1924 893-702 http://www.sew-eurodrive.co.uk info@sew-eurodrive.co.uk

Greece			
Sales **Service**	**Athen**	Christ. Boznos & Son S.A. 12, Mavromichali Street P.O. Box 80136, GR-18545 Piraeus	Tel. +30 2 1042 251-34 Fax +30 2 1042 251-59 http://www.boznos.gr info@boznos.gr

Hong Kong			
Assembly **Sales** **Service**	**Hong Kong**	SEW-EURODRIVE LTD. Unit No. 801-806, 8th Floor Hong Leong Industrial Complex No. 4, Wang Kwong Road Kowloon, Hong Kong	Tel. +852 2 7960477 + 79604654 Fax +852 2 7959129 sew@sewhk.com

Hungary			
Sales **Service**	**Budapest**	SEW-EURODRIVE Kft. H-1037 Budapest Kunigunda u. 18	Tel. +36 1 437 06-58 Fax +36 1 437 06-50 office@sew-eurodrive.hu

India			
Assembly **Sales** **Service**	**Baroda**	SEW-EURODRIVE India Pvt. Ltd. Plot No. 4, Gidc Por Ramangamdi • Baroda - 391 243 Gujarat	Tel. +91 265 2831086 Fax +91 265 2831087 http://www.seweurodriveindia.com mdoffice@seweurodriveindia.com
Technical Offices	**Bangalore**	SEW-EURODRIVE India Private Limited 308, Prestige Centre Point 7, Edward Road Bangalore	Tel. +91 80 22266565 Fax +91 80 22266569 salesbang@seweurodriveinindia.com

Ireland			
Sales **Service**	**Dublin**	Alperton Engineering Ltd. 48 Moyle Road Dublin Industrial Estate Glasnevin, Dublin 11	Tel. +353 1 830-6277 Fax +353 1 830-6458

Israel			
Sales	**Tel-Aviv**	Liraz Handasa Ltd. Ahofer Str 34B / 228 58858 Holon	Tel. +972 3 5599511 Fax +972 3 5599512 lirazhandasa@barak-online.net

Italy			
Assembly **Sales** **Service**	**Milano**	SEW-EURODRIVE di R. Blickle & Co.s.a.s. Via Bernini,14 I-20020 Solaro (Milano)	Tel. +39 02 96 9801 Fax +39 02 96 799781 http://www.sew-eurodrive.it sewit@sew-eurodrive.it

Ivory Coast			
Sales	**Abidjan**	SICA Ste industrielle et commerciale pour l'Afrique 165, Bld de Marseille B.P. 2323, Abidjan 08	Tel. +225 2579-44 Fax +225 2584-36

Japan			
Assembly **Sales** **Service**	**Toyoda-cho**	SEW-EURODRIVE JAPAN CO., LTD 250-1, Shimoman-no, Iwata Shizuoka 438-0818	Tel. +81 538 373811 Fax +81 538 373814 sewjapan@sew-eurodrive.co.jp

Korea			
Assembly **Sales** **Service**	**Ansan-City**	SEW-EURODRIVE KOREA CO., LTD. B 601-4, Banweol Industrial Estate Unit 1048-4, Shingil-Dong Ansan 425-120	Tel. +82 31 492-8051 Fax +82 31 492-8056 http://www.sew-korea.co.kr master@sew-korea.co.kr

Latvia			
Sales	**Riga**	SIA Alas-Kuul Katlakalna 11C LV-1073 Riga	Tel. +371 7139253 Fax +371 7139386 http://www.alas-kuul.com info@alas-kuul.com

Lebanon			
Sales	**Beirut**	Gabriel Acar & Fils sarl B. P. 80484 Bourj Hammoud, Beirut	Tel. +961 1 4947-86 +961 1 4982-72 +961 3 2745-39 Fax +961 1 4949-71 gacar@beirut.com

Lithuania			
Sales	**Alytus**	UAB Irseva Naujoji 19 LT-62175 Alytus	Tel. +370 315 79204 Fax +370 315 56175 info@irseva.lt http://www.sew-eurodrive.lt

Luxembourg			
Assembly **Sales** **Service**	**Brüssel**	CARON-VECTOR S.A. Avenue Eiffel 5 B-1300 Wavre	Tel. +32 10 231-311 Fax +32 10 231-336 http://www.caron-vector.be info@caron-vector.be

Malaysia			
Assembly **Sales** **Service**	**Johore**	SEW-EURODRIVE SDN BHD No. 95, Jalan Seroja 39, Taman Johor Jaya 81000 Johor Bahru, Johor West Malaysia	Tel. +60 7 3549409 Fax +60 7 3541404 sales@sew-eurodrive.com.my

Mexico			
Assembly **Sales** **Service**	**Queretaro**	SEW-EURODRIVE MEXIKO SA DE CV SEM-981118-M93 Tequisquiapan No. 102 Parque Industrail Queretaro C.P. 76220 Queretaro, Mexico	Tel. +52 442 1030-300 Fax +52 442 1030-301 http://www.sew-eurodrive.com.mx scmexico@seweurodrive.com.mx

Morocco			
Sales	**Casablanca**	Afit 5, rue Emir Abdelkader MA 20300 Casablanca	Tel. +212 22618372 Fax +212 22618351 richard.miekisiak@premium.net.ma

Netherlands			
Assembly **Sales** **Service**	**Rotterdam**	VECTOR Aandrijftechniek B.V. Industrieweg 175 NL-3044 AS Rotterdam Postbus 10085 NL-3004 AB Rotterdam	Tel. +31 10 4463-700 Fax +31 10 4155-552 http://www.vector.nu info@vector.nu

New Zealand			
Assembly **Sales** **Service**	**Auckland**	SEW-EURODRIVE NEW ZEALAND LTD. P.O. Box 58-428 82 Greenmount drive East Tamaki Auckland	Tel. +64 9 2745627 Fax +64 9 2740165 http://www.sew-eurodrive.co.nz sales@sew-eurodrive.co.nz
	Christchurch	SEW-EURODRIVE NEW ZEALAND LTD. 10 Settlers Crescent, Ferrymead Christchurch	Tel. +64 3 384-6251 Fax +64 3 384-6455 sales@sew-eurodrive.co.nz

Norway			
Assembly **Sales** **Service**	**Moss**	SEW-EURODRIVE A/S Solgaard skog 71 N-1599 Moss	Tel. +47 69 241-020 Fax +47 69 241-040 http://www.sew-eurodrive.no sew@sew-eurodrive.no

Peru			
Assembly **Sales** **Service**	**Lima**	SEW DEL PERU MOTORES REDUCTORES S.A.C. Los Calderos, 120-124 Urbanizacion Industrial Vulcano, ATE, Lima	Tel. +51 1 3495280 Fax +51 1 3493002 http://www.sew-eurodrive.com.pe sewperu@sew-eurodrive.com.pe

Poland			
Assembly **Sales** **Service**	**Lodz**	SEW-EURODRIVE Polska Sp.z.o.o. ul. Techniczna 5 PL-92-518 Lodz	Tel. +48 42 67710-90 Fax +48 42 67710-99 http://www.sew-eurodrive.pl sew@sew-eurodrive.pl

Portugal			
Assembly **Sales** **Service**	**Coimbra**	SEW-EURODRIVE, LDA. Apartado 15 P-3050-901 Mealhada	Tel. +351 231 20 9670 Fax +351 231 20 3685 http://www.sew-eurodrive.pt infosew@sew-eurodrive.pt

Romania			
Sales **Service**	**Bucuresti**	Sialco Trading SRL str. Madrid nr.4 011785 Bucuresti	Tel. +40 21 230-1328 Fax +40 21 230-7170 sialco@sialco.ro

Russia			
Assembly **Sales** **Service**	**St. Petersburg**	ZAO SEW-EURODRIVE P.O. Box 36 195220 St. Petersburg Russia	Tel. +7 812 3332522 +7 812 5357142 Fax +7 812 3332523 http://www.sew-eurodrive.ru sew@sew-eurodrive.ru

Senegal			
Sales	**Dakar**	SENEMECA Mécanique Générale Km 8, Route de Rufisque B.P. 3251, Dakar	Tel. +221 849 47-70 Fax +221 849 47-71 senemeca@sentoo.sn

Serbia and Montenegro			
Sales	**Beograd**	DIPAR d.o.o. Ustanicka 128a PC Košum, IV floor SCG-11000 Beograd	Tel. +381 11 347 3244 / +381 11 288 0393 Fax +381 11 347 1337 dipar@yubc.net

Singapore			
Assembly **Sales** **Service**	**Singapore**	SEW-EURODRIVE PTE. LTD. No 9, Tuas Drive 2 Jurong Industrial Estate Singapore 638644	Tel. +65 68621701 Fax +65 68612827 http://www.sew-eurodrive.com.sg sewsingapore@sew-eurodrive.com

Slovakia			
Sales	**Bratislava**	SEW-Eurodrive SK s.r.o. Rybnicna 40 SK-83107 Bratislava	Tel. +421 2 49595201 Fax +421 2 49595200 http://www.sew.sk sew@sew-eurodrive.sk
	Zilina	SEW-Eurodrive SK s.r.o. ul. Vojtecha Spanyola 33 SK-010 01 Zilina	Tel. +421 41 700 2513 Fax +421 41 700 2514 sew@sew-eurodrive.sk
	Banská Bystrica	SEW-Eurodrive SK s.r.o. Rudlovská cesta 85 SK-97411 Banská Bystrica	Tel. +421 48 414 6564 Fax +421 48 414 6566 sew@sew-eurodrive.sk

Slovenia			
Sales **Service**	**Celje**	Pakman - Pogonska Tehnika d.o.o. UI. XIV. divizije 14 SLO - 3000 Celje	Tel. +386 3 490 83-20 Fax +386 3 490 83-21 pakman@siol.net

South Africa			
Assembly **Sales** **Service**	**Johannesburg**	SEW-EURODRIVE (PROPRIETARY) LIMITED Eurodrive House Cnr. Adcock Ingram and Aerodrome Roads Aeroton Ext. 2 Johannesburg 2013 P.O.Box 90004 Bertsham 2013	Tel. +27 11 248-7000 Fax +27 11 494-3104 http://www.sew.co.za dross@sew.co.za
	Capetown	SEW-EURODRIVE (PROPRIETARY) LIMITED Rainbow Park Cnr. Racecourse & Omuramba Road Montague Gardens Cape Town P.O.Box 36556 Chempet 7442 Cape Town	Tel. +27 21 552-9820 Fax +27 21 552-9830 Telex 576 062 dswanepoel@sew.co.za
	Durban	SEW-EURODRIVE (PROPRIETARY) LIMITED 2 Monaceo Place Pinetown Durban P.O. Box 10433, Ashwood 3605	Tel. +27 31 700-3451 Fax +27 31 700-3847 dtait@sew.co.za

Spain			
Assembly **Sales** **Service**	**Bilbao**	SEW-EURODRIVE ESPAÑA, S.L. Parque Tecnológico, Edificio, 302 E-48170 Zamudio (Vizcaya)	Tel. +34 9 4431 84-70 Fax +34 9 4431 84-71 http://www.sew-eurodrive.es sew.spain@sew-eurodrive.es

Sweden			
Assembly **Sales** **Service**	**Jönköping**	SEW-EURODRIVE AB Gnejsvägen 6-8 S-55303 Jönköping Box 3100 S-55003 Jönköping	Tel. +46 36 3442-00 Fax +46 36 3442-80 http://www.sew-eurodrive.se info@sew-eurodrive.se

Switzerland			
Assembly **Sales** **Service**	**Basel**	Alfred Imhof A.G. Jurastrasse 10 CH-4142 Münchenstein bei Basel	Tel. +41 61 417 1717 Fax +41 61 417 1700 http://www.imhof-sew.ch info@imhof-sew.ch

Thailand			
Assembly **Sales** **Service**	**Chon Buri**	SEW-EURODRIVE (Thailand) Ltd. Bangpakong Industrial Park 2 700/456, Moo.7, Tambol Donhuaroh Muang District Chon Buri 20000	Tel. +66 38 454281 Fax +66 38 454288 sewthailand@sew-eurodrive.com

Tunisia			
Sales	**Tunis**	T. M.S. Technic Marketing Service 7, rue Ibn EI Heithem Z.I. SMMT 2014 Mégrine Erriadh	Tel. +216 1 4340-64 + 1 4320-29 Fax +216 1 4329-76 tms@tms.com.tn

Turkey			
Assembly **Sales** **Service**	**Istanbul**	SEW-EURODRIVE Hareket Sistemleri San. ve Tic. Ltd. Sti. Bagdat Cad. Koruma Cikmazi No. 3 TR-34846 Maltepe ISTANBUL	Tel. +90 216 4419163 / 164 3838014/15 Fax +90 216 3055867 sew@sew-eurodrive.com.tr

Ukraine			
Sales **Service**	**Dnepropetrovsk**	SEW-EURODRIVE Str. Rabochaja 23-B, Office 409 49008 Dnepropetrovsk	Tel. +380 56 370 3211 Fax +380 56 372 2078 http://www.sew-eurodrive.ua sew@sew-eurodrive.ua

USA			
Production **Assembly** **Sales** **Service**	**Greenville**	SEW-EURODRIVE INC. 1295 Old Spartanburg Highway P.O. Box 518 Lyman, S.C. 29365	Tel. +1 864 439-7537 Fax Sales +1 864 439-7830 Fax Manuf. +1 864 439-9948 Fax Ass. +1 864 439-0566 Telex 805 550 http://www.seweurodrive.com cslyman@seweurodrive.com
Assembly **Sales** **Service**	**San Francisco**	SEW-EURODRIVE INC. 30599 San Antonio St. Hayward, California 94544-7101	Tel. +1 510 487-3560 Fax +1 510 487-6381 cshayward@seweurodrive.com
	Philadelphia/PA	SEW-EURODRIVE INC. Pureland Ind. Complex 2107 High Hill Road, P.O. Box 481 Bridgeport, New Jersey 08014	Tel. +1 856 467-2277 Fax +1 856 845-3179 csbridgeport@seweurodrive.com
	Dayton	SEW-EURODRIVE INC. 2001 West Main Street Troy, Ohio 45373	Tel. +1 937 335-0036 Fax +1 937 440-3799 cstroy@seweurodrive.com
	Dallas	SEW-EURODRIVE INC. 3950 Platinum Way Dallas, Texas 75237	Tel. +1 214 330-4824 Fax +1 214 330-4724 csdallas@seweurodrive.com
	Additional addresses for service in the USA provided on request!		

Venezuela			
Assembly **Sales** **Service**	**Valencia**	SEW-EURODRIVE Venezuela S.A. Av. Norte Sur No. 3, Galpon 84-319 Zona Industrial Municipal Norte Valencia, Estado Carabobo	Tel. +58 241 832-9804 Fax +58 241 838-6275 http://www.sew-eurodrive.com.ve sewventas@cantv.net sewfinanzas@cantv.net

How we're driving the world

With people who think fast and develop the future with you.

With a worldwide service network that is always close at hand.

With drives and controls that automatically improve your productivity.

With comprehensive knowledge in virtually every branch of industry today.

With uncompromising quality that reduces the cost and complexity of daily operations.

SEW-EURODRIVE
Driving the world

With a global presence that offers responsive and reliable solutions. Anywhere.

With innovative technology that solves tomorrow's problems today.

With online information and software updates, via the Internet, available around the clock.

SEW-EURODRIVE GmbH & Co KG
P.O. Box 3023 · D-76642 Bruchsal / Germany
Phone +49 7251 75-0 · Fax +49 7251 75-1970
sew@sew-eurodrive.com
→ **www.sew-eurodrive.com**